SONY®

DIGITAL VIDEOCASSETTE RECORDER

DVW-A500
DVW-500
DVW-A500/1
DVW-500/1

ANALOG COMPOSITE DECODER BOARD
BKDW-505

AUDIO PROGRAM PLAY BOARD
BKDW-507

PARALLEL (50P) INTERFACE KIT
BKDW-509

CONTROL PANEL EXTENSION KIT
BKDW-510

CONTROL PANEL CASE
BKDW-511

CONTROL PANEL
BKDW-514

CONTROL PANEL
BKDW-515

Digital BETACAM™

MAINTENANCE MANUAL Part 2
Volume 4 1st Edition (Revised 6)

⚠警告

このマニュアルは，サービス専用です。
お客様が，このマニュアルに記載された設置や保守，点検，修理などを行うと感電や火災，人身事故につながることがあります。
危険をさけるため，サービストレーニングを受けた技術者のみご使用ください。

⚠WARNING

This manual is intended for qualified service personnel only.
To reduce the risk of electric shock, fire or injury, do not perform any servicing other than that contained in the operating instructions unless you are qualified to do so. Refer all servicing to qualified service personnel.

⚠WARNUNG

Die Anleitung ist nur für qualifiziertes Fachpersonal bestimmt.
Alle Wartungsarbeiten dürfen nur von qualifiziertem Fachpersonal ausgeführt werden. Um die Gefahr eines elektrischen Schlages, Feuergefahr und Verletzungen zu vermeiden, sind bei Wartungsarbeiten strikt die Angaben in der Anleitung zu befolgen. Andere als die angegeben Wartungsarbeiten dürfen nur von Personen ausgeführt werden, die eine spezielle Befähigung dazu besitzen.

⚠AVERTISSEMENT

Ce manual est destiné uniquement aux personnes compétentes en charge de l'entretien. Afin de réduire les risques de décharge électrique, d'incendie ou de blessure n'effectuer que les réparations indiquées dans le mode d'emploi à moins d'être qualifié pour en effectuer d'autres. Pour toute réparation faire appel à une personne compétente uniquement.

DVW-A500 (J)	Serial No. 10001 and Higher
DVW-A500 (UC)	Serial No. 10001 and Higher
DVW-500 (J)	Serial No. 10001 and Higher
DVW-500 (UC)	Serial No. 10001 and Higher
DVW-A500/1 (J)	Serial No. 50001 and Higher
DVW-A500/1 (UC)	Serial No. 50001 and Higher
DVW-500/1 (J)	Serial No. 50001 and Higher
DVW-500/1 (UC)	Serial No. 50001 and Higher
BKDW-505	Serial No. 10001 and Higher
BKDW-507	Serial No. 10001 and Higher
BKDW-509	Serial No. 10001 and Higher
BKDW-510	
BKDW-511	
BKDW-514	Serial No. 10001 and Higher
BKDW-515	Serial No. 10001 and Higher

Table of Contents

Manual Structure

Purpose of this manual .... 3 (E)
Contents .... 3 (E)

1. Schematic Diagrams for Recorder

Schematic Diagram Index 1-1
Circuit Function 1-2
VPR-1 1-4
APR-1 1-20
DIF-16 1-38
VI-2 1-44
DPR-36 1-50
EQ-45A/45 1-66
CUE-1A/1 1-80
DM-89 (DVW-A500) 1-88
TBC-24 (DVW-A500) 1-98
TBC-23 (DVW-A500) 1-106
AP-28 (DVW-A500) 1-116
CP-218 1-124
CP-220 1-128
SS-52A/52 1-130
DT-34 1-155
DR-307/200 1-156
RM-82/141
SE-228 1-160
HN-181 (1/3) 1-164
HN-184
TR-78
CCM-15 (T)
PTC-54
PTC-35
HN-181 (2/3) 1-167
PTC-59
PTC-71
CCM-15 (R)

HN-181 (3/3) 1-168
HN-185
TR-79
PC-70
CL-29
LP-81
FP-58 1-170
VR-152 1-172
VR-153
SWC-17 1-174
SWC-18 1-176
SWC-19 (1/2) 1-177
SWC-19 (2/2) 1-178
KY-231
DP-176
PTC-69
Switching regulator 1-180
AC-155
MB-441 1-182

2. Schematic Diagram for Optional Boards

Circuit Function 2-1
RM-130 (BKDW-509) 2-3
PP-45 (BKDW-507) 2-4
DEC-65 (BKDW-505) 2-8
KY-231 (BKDW-514) 2-12
DP-176
PTC-69
CP-266 (BKDW-515) 2-14
PTC-69
KY-330 (BKDW-515) 2-18
SW-749 (BKDW-515) 2-19

http://getMANUAL.com

Manual Structure

Purpose of this manual

This manual is maintenance manual of the following products.

Product

VTR:	DVW-A500, DVW-500, DVW-A500/1, DVW-500/1, DVW-A510, DVW-510, DVW-CA510
Optional equipments:	BKDW-505, BKDW-507, BKDW-509, BKDW-510, BKDW-511, BKDW-514, BKDW-515

This manual describes the information items (adjustment, board layouts, schematic diagrams, detailed parts list, etc.) that premise the service based on the component parts.

Contents

The following is a summary of all the sections for understanding the contents of this manual.

Maintenance Manual Part 2, Volume 4

Section 1 Schematic Diagrams for Recorder
Describes the schematic diagrams of the recorder.

Section 2 Schematic Diagram for Optional Boards
Describes the schematic diagrams of the optional boards for recorder.
(BKDW-505/507/509/514/515)

(continue)

Contents (continued)

Maintenance Manual Part 2, Volume 1	**Section 1**	**Service Overview**
	Section 2	**Replacement of Mechanical Parts**
	Section 3	**Tape Path Alignment**
	Section 4	**Electrical Alignment Overview**
	Section 5	**Electrical Alignment for VTR**
	Section 6	**Electrical Alignment for Optional Boards**
Maintenance Manual Part 2, Volume 2	**Section 1**	**Parts Information**
	Section 2	**Exploded Views**
	Section 3	**Electrical Parts List for VTR**
	Section 4	**Electrical Parts List for Optional Boards**
	Section 5	**Packing Materials and Supplied Accessories List**
	Section 6	**Optional Fixtures List**
Maintenance Manual Part 2, Volume 3	**Section 1**	**Board Layouts**
	Section 2	**Schematic Diagrams – Frame Wiring –**
	Section 3	**Semiconductor Pin Assignments**
Maintenance Manual Part 2, Volume 5	**Section 1**	**Schematic Diagrams for Player**
	Section 2	**Schematic Diagram for Optional Boards**
Maintenance Manual Part 1*1	**Section 1**	**Service Overview**
	Section 2	**Recording Format, Head Configuration, and Signal Processing**
	Section 3	**Block Diagrams and Circuit Descriptions**
	Section 4	**Error Messages and Troubleshooting**
	Section 5	**Maintenance Mode**
	Section 6	**Replacement of Power Block and Circuit Boards**
	Section 7	**Periodic Maintenance and Inspection**
	Section 8	**Replacement of Periodic Maintenance Parts**
	Section 9	**Spare Parts**

*1: There are two types manual for Maintenance Manual Part 1: Recorder (DVW-A500/500) and player (DVW-A510/510/CA510).

Section 1
Schematic Diagrams for Recorder

Schematic Diagram Index

A. AC-155 1-180
AP-28 (DVW-A500) 1-116
APR-1 1-20

C. CCM-15 (T) 1-164
CCM-15 (R) 1-167
CL-29 1-168
CP-218 1-124
CP-220 1-128
CUE-1AP (DVW-A500) 1-80
CUE-1 (DVW-500) 1-80

D. DIF-16 1-38
DM-89 (DVW-A500) 1-88
DP-176 1-178
DPR-36 1-50
DR-200 1-156
DR-307 1-156
DT-34 1-155

E. EQ-45A (DVW-A500) 1-66
EQ-45 (DVW-500) 1-66

F. FP-58 1-170

H. HN-181 1-164
HN-184 1-164
HN-185 1-168

K. KY-231 1-178

L. LP-81 1-168

M. MB-441 1-182

P. PC-70 1-168
PD-35 1-164
PTC-54 1-164
PTC-59 1-167
PTC-69 1-178
PTC-71 1-167

R. RM-141 (DVW-A500) 1-156
RM-82 1-156

S. SE-228 1-160
SS-52A (DVW-A500) 1-130
SS-52 (DVW-500) 1-130
SWC-17 1-174
SWC-18 1-176
SWC-19 1-177
Switching regulator 1-180

T. TBC-23 (DVW-A500) 1-106
TBC-24 (DVW-A500) 1-98
TR-78 1-164
TR-79 1-168

V. VI-2 1-44
VPR-1 1-4
VR-152 1-172
VR-153 1-172

-DUS-XXX BOARD-

The DUS-XXX board is added to suppiement thefunction of main board.

DUS-194	(CUE-1;	1-648-537-31)
	(CUE-1A;	1-648-537-21)
DUS-679	(TBC-23;	1-648-543-11, 12)
DUS-680	(EQ-45A;	1-648-536-11)
DUS-682	(EQ-45A;	1-648-536-11)
DUS-687	(SS-52;	1-648-535-21)
	(SS-52A;	1-648-535-11)
DUS-690	(VPR-1;	1-648-532-11)
DUS-691	(VPR-1;	1-648-532-11)
DUS-694	(SS-52;	1-648-535-21)
	(SS-52A;	1-648-535-11)
DUS-706	(DPR-36;	1-648-533-11)
DUS-708	(DPR-36;	1-648-533-11)
DUS-709	(EQ-45;	1-648-536-22)
	(EQ-45A;	1-648-536-11, 12)
DUS-710	(DM-89;	1-648-541-11, 12)
	(VPR-1;	1-648-532-13)
DUS-711	(EQ-45;	1-648-536-22)
	(EQ-45A;	1-648-536-11, 12)
DUS-712	(DPR-36;	1-648-533-11)
DUS-723	(CUE-1A;	1-648-537-21)
DUS-727	(DM-89;	1-648-541-12)
DUS-728	(FP-58;	1-648-551-11)
DUS-741	(DR-200;	1-648-559-12)
DUS-769	(VPR-1;	1-648-532-12)
DUS-840	(VPR-1;	1-648-532-14)

Note

The ⚠ -marked components are critical to safety.
Replace only with same components as specified.

注意

⚠印の部品は安全性を維持するために重要な部品です。
従って交換するときは必ず指定の部品を使ってください。

Circuit Function of Printed Circuit Board

System configuration	Board name	Circuit Function
Digital process	VPR-1	Video signal processor, A/D, D/A, Reference clock generator, Composite encoder
	APR-1	Audio signal processor, A/D, D/A, AES/EBU interface
	DIF-16 (inc. VI-2)	4:2:2 component serial digital I/O interface with Embedded audio
	DPR-36	Digital data processor (Encode/Decode, Error correction)
RF, Analog process	EQ-45A (DVW-A500)	RF equalizer (REC current control, PB EQ), Betacam PB buffer
	EQ-45 (DVW-500)	RF equalizer (REC current control, PB EQ)
	CUE-1A (DVW-A500)	CUE REC/PB, LTC REC/PB, and LAU PB circuits, CUE/LTC/FULL erase OSC
	CUE-1 (DVW-500)	CUE REC/PB and LTC REC/PB circuits, CUE/LTC/FULL erase OSC
Betacam playback	DM-89	RF demodulator
(DVW-A500)	TBC-24	TBC (A/D conversion & Write clock generate blocks)
	TBC-23	TBC (Sequence & Reference blocks)
	AP-28	AFM demodulator & LAU noise reduction
System/servo control	SS-52A (DVW-A500)	System, Servo, Analog/Digital DT control
	SS-52 (DVW-500)	System, Servo, Digital DT control
	DT-34	DT driver
	DR-307/200	Motors driver (Drum, Capstan, T/S reels, Threading, Reel shift, Cassette up/ down), Solenoids driver (Pinch, T/S brake, Cleaning), Degaussing head driver
Mech.deck driver/sensor	CCM-15	Threading motor/Reel shift motor
	PD-35	Pinch solenoid connection
	PTC-54	Threading FG
	PTC-59	Cassette’s tabs sensor
	PTC-71	Reel position sensor
	RM-82	T/S reel motor
	RM-141	T reel motor
	SE-228	T/S reel FG
	TR-78	S tension sensor
	TR-79	T tension sensor, Thread/unthread end sensor
Cassette compartment	CL-29	Cassette up/down motor, Cassette down sensor
driver/sensor	LP-81	Lamp of cassette comparatment
	PC-70	Cassette-in sensor, Cassette size sensor

Circuit Function

System configuration		Board name	Circuit Function
Front panel function		FP-58	Sub control panel and Upper panel function (SWs, LEDs) control, CAV control level conversion
		VR-152	Audio REC and Phone level RVs, Phone connector
		VR-153	Audio PB level RVs
		SWC-17	Upper panel function (SWs, LEDs)
		SWC-18	Sub control panel function
		SWC-19	System set-up panel function control
		KY-231	Lower panel function control
		DP-176	Time counter display
		PTC-69	Search dial sensor, Dial solenoid connection
Rear panel function		CP-218	Rear connector board (Analog video) with input/output driver
		CP-220	Rear connector board (Analog/Digital audio, TC)
		MB-441	Remote control connectors (CONTROL PANEL, REMOTE 1 IN/OUT, RS232C, VIDEO CONTROL)
Power		AC-155	AC connector board with breaker
	SOPS-1042 or	SOPS-1019C	Switching regulator
	SOPS-1042 (A)	SOPS-1042A	Switching regulator (inc. SOPS-1019C/1042S boards)
		SOPS-1042B or SOPS-1042D	Switching regulator (AC-DC)
		SOPS-1042S	Switching regulator
Other		MB-441	Mother board
		HN-181	Connection board with REC inhibit sensor (Drum/Capstan/Reel-shift motors, CTL head, DT-34/HN-184/HN-185/PTC-59/PTC-71 boards)
		HN-184	Connection board (Threading motor, Tape end sensor, PD-35/PTC-54/TR-78 boards)
		HN-185	Connection board with dew sensor (Tape top sensor, Cassette compartment, TR-79 board, Slip ring)

1-3

 VPR-1

①TP101(N-6) STOP (E-E) mode
TP104(N-5) STOP (E-E) mode

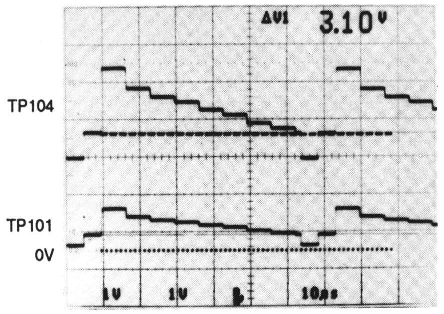

④TP601(R-1) STOP (E-E) mode

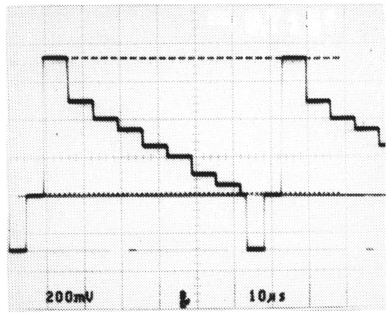

⑦TP603(R-3) STOP (E-E) mode

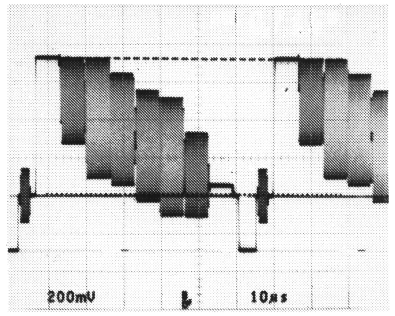

②TP102(P-6) STOP (E-E) mode
TP106(P-5) STOP (E-E) mode

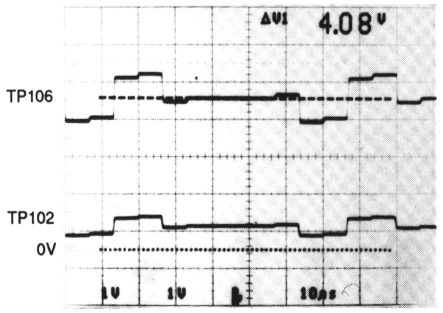

⑤TP600(R-2) STOP (E-E) mode

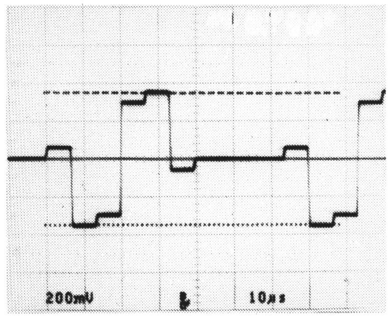

③TP103(R-6) STOP (E-E) mode
TP105(R-5) STOP (E-E) mode

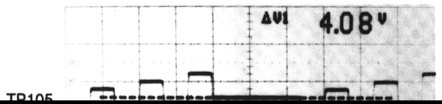

⑥TP602(R-2) STOP (E-E) mode

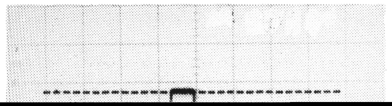

[redacted]

 1-4

 VPR-1 (1/7)

1
2
3
4
5

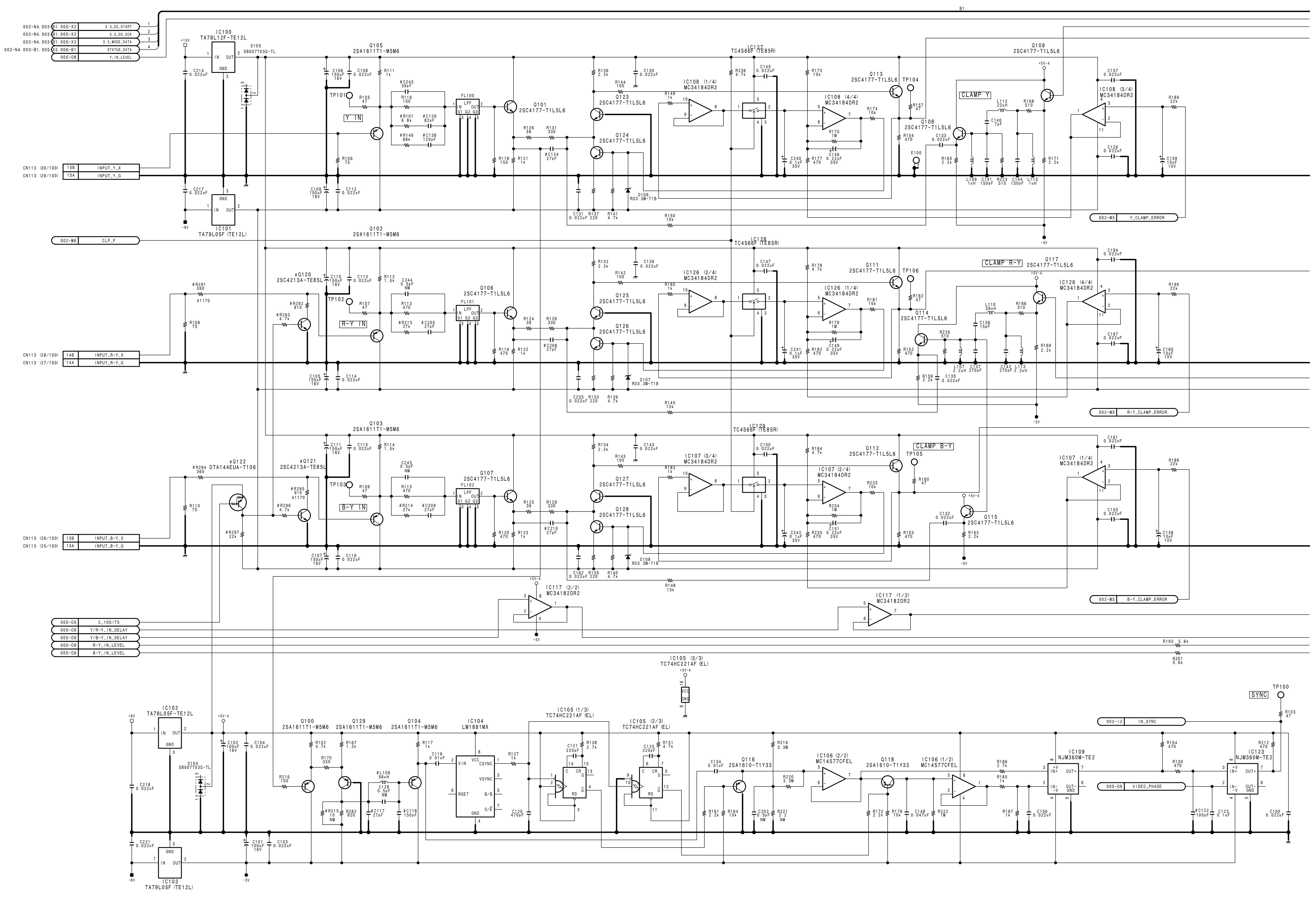

 1-6 (f)

A | B | C | D | E | F | G | H

 VPR-1 (1/7)

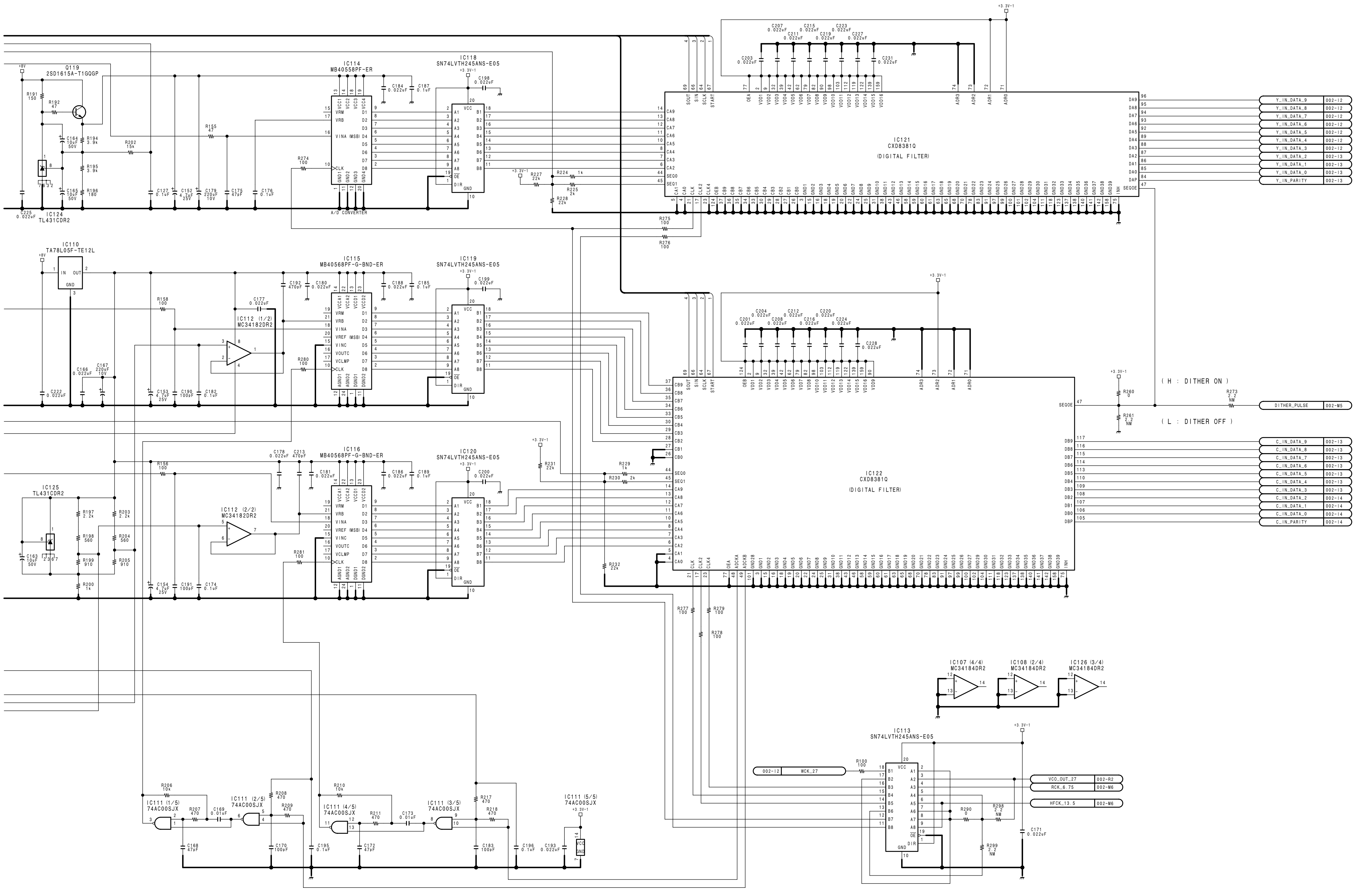

#	NTSC	PAL
C117	27pF 50V CH	47pF 50V CH
C118	150pF 50V CH	220pF 50V CH
C122	100pF 50V CH	150pF 50V CH
C124	27pF 50V CH	33pF 50V CH
C129	82pF 50V CH	47pF 50V CH
C138	120pF 50V CH	100pF 50V CH
C205	27pF 50V CH	22pF 50V CH
C206	27pF 50V CH	33pF 50V CH
C209	27pF 50V CH	22pF 50V CH
C210	27pF 50V CH	33pF 50V CH
C243	NM	39pF 50V CH
L106	56uH 10%	82uH 10%
Q120	2SC4213A-T	NM
Q121	2SC4213A-T	NM
Q122	DTA144EUT1	NM
R101	6.8k 1/10W 0.5%	10k 1/10W 0.5%
R146	68k 1/10W 0.5%	33k 1/10W 0.5%
R213	27k 1/10W 0.5%	56k 1/10W 0.5%
R214	27k 1/10W 0.5%	56k 1/10W 0.5%
R215	NM	15k 1/10W 0.5%
R291	360 1/10W 0.5%	0
R292	910 1/10W 0.5%	NM
R293	4.7k 1/10W 5%	NM
R294	360 1/10W 0.5%	0
R295	910 1/10W 0.5%	NM
R296	4.7k 1/10W 5%	NM
R297	22k 1/10W 5%	NM

Component Video A/D Converter & SYNC Separator

VPR-1 BOARD (1/7)

BOARD NO. 1-648-532-18
BOARD'S LOT NO. 909-
DVW-A500 (J, UC) : VPR-1A MCB
DVW-500 (J, UC) : VPR-1 MCB
DVW-A500_VPR-1_002_1

 1-7 (f)

VPR-1 (2/7)

1
2
3
4
5

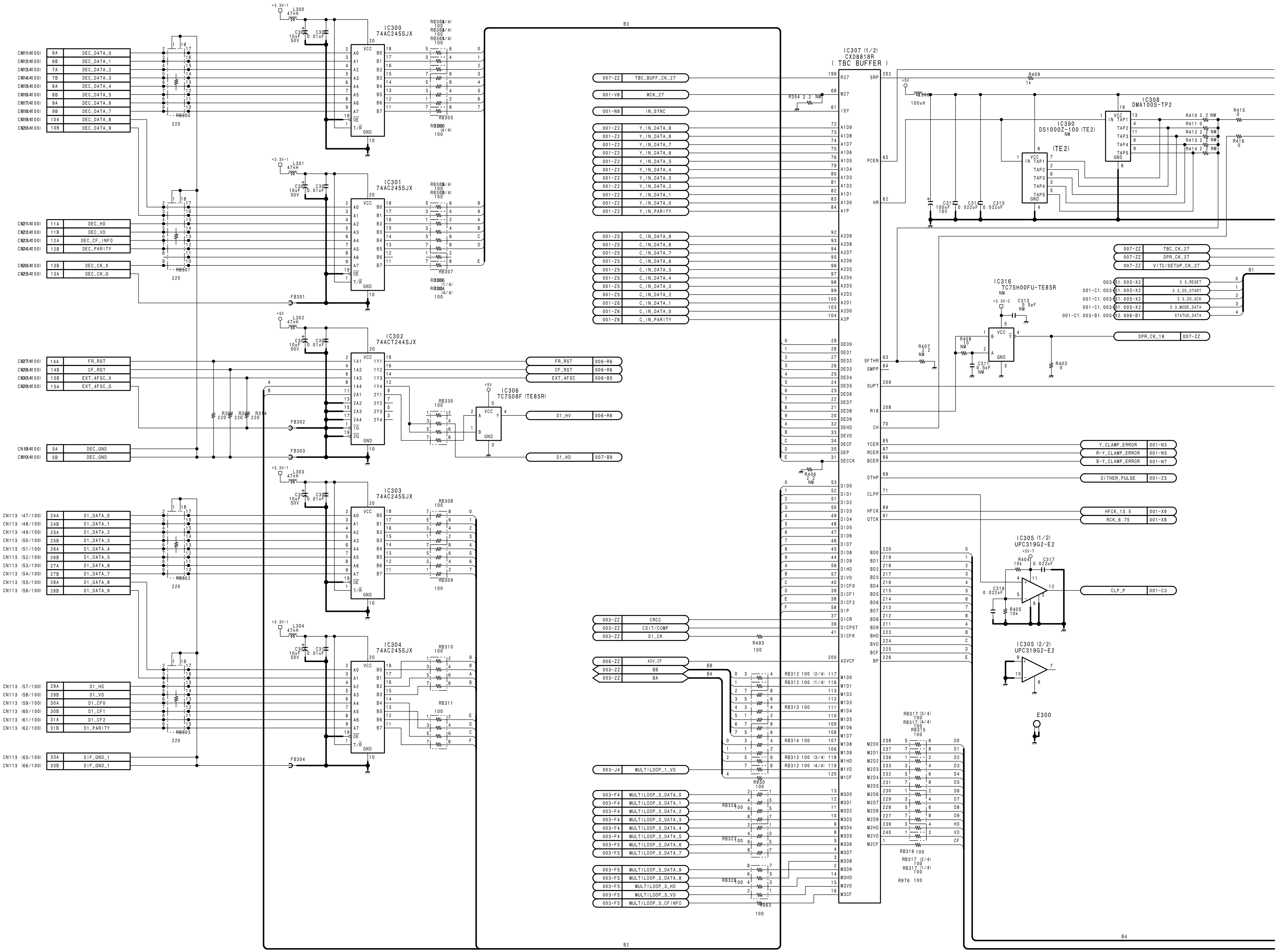

1-8 (f)

A B C D E F G H

http://getMANUAL.com

 VPR-1 (2/7)

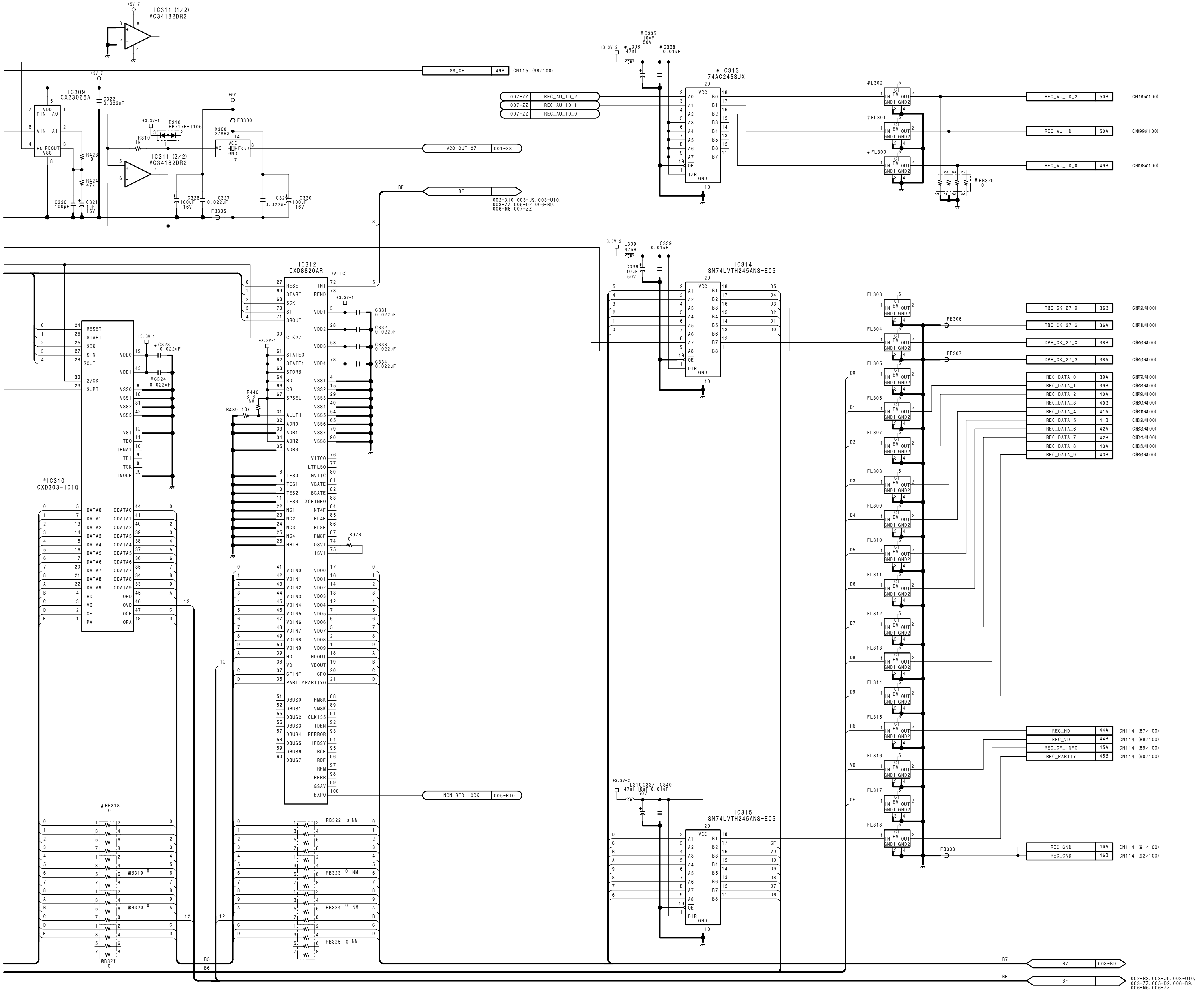

#	NTSC	PAL
C323	0.022uF 50V B	NM
C324	0.022uF 50V B	NM
C335	10uF 50V	NM
C338	0.01uF 50V B	NM
FL300	123989822	NM
FL301	123989822	NM
FL302	123989822	NM
IC310	CXD303-101	NM
IC313	74AC245SJX	NM
L308	47nH 5%	NM
RB318	NM	0
RB319	NM	0
RB320	NM	0
RB321	NM	0
RB329	NM	0

Input Digital Video Data Processor

VPR-1 BOARD (2/7)

BOARD NO. 1-648-532-18
BOARD'S LOT NO. 909-
DVW-A500 (J, UC) : VPR-1A MCB
DVW-500 (J, UC) : VPR-1 MCB

DVW-A500_VPR-1_002_2

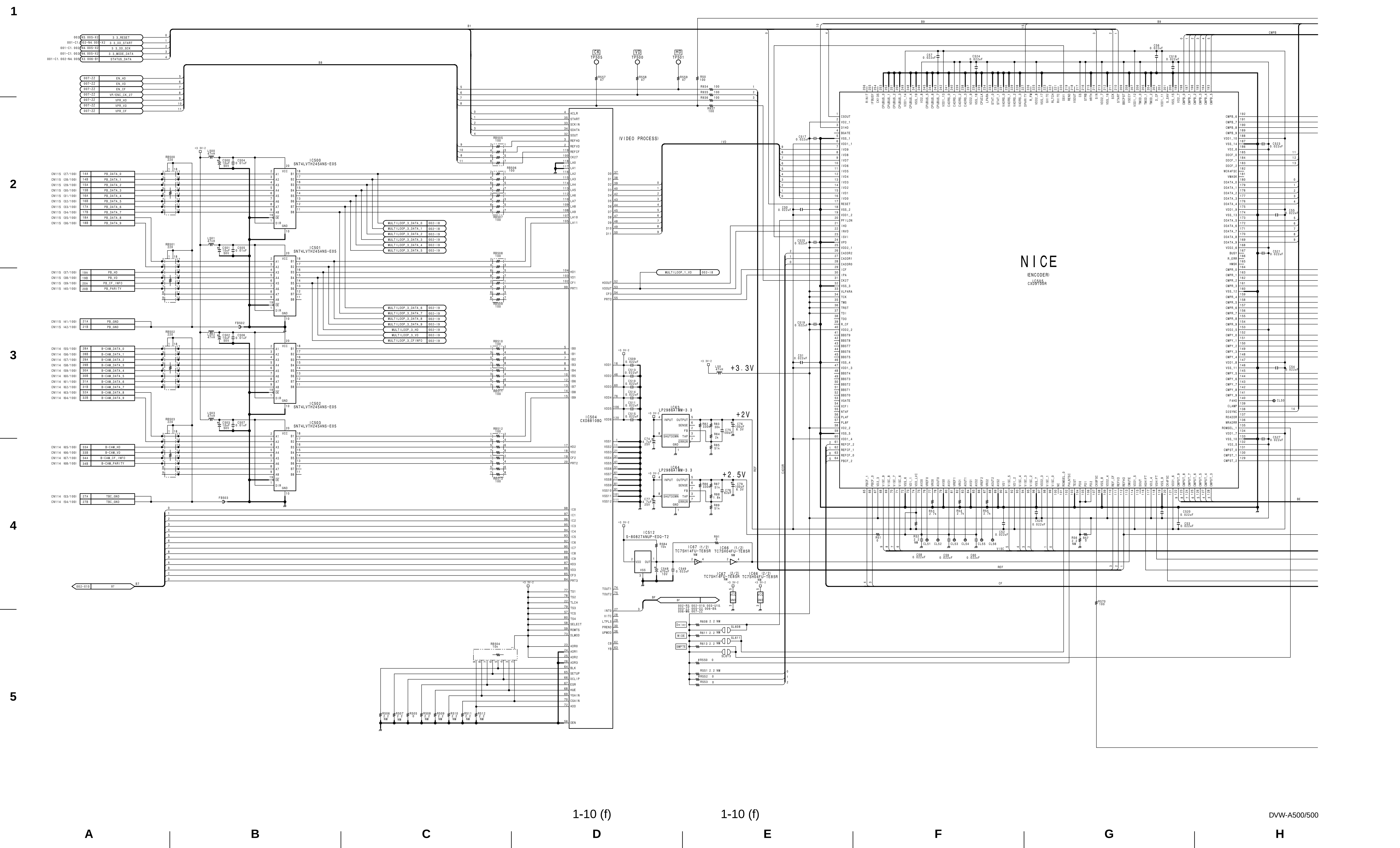
NICE
(ENCODER)
IC506
CXD9100R
(VIDEO PROCESS)
IC504
CXD8810BQ
+3.3V
+2V
+2.5V

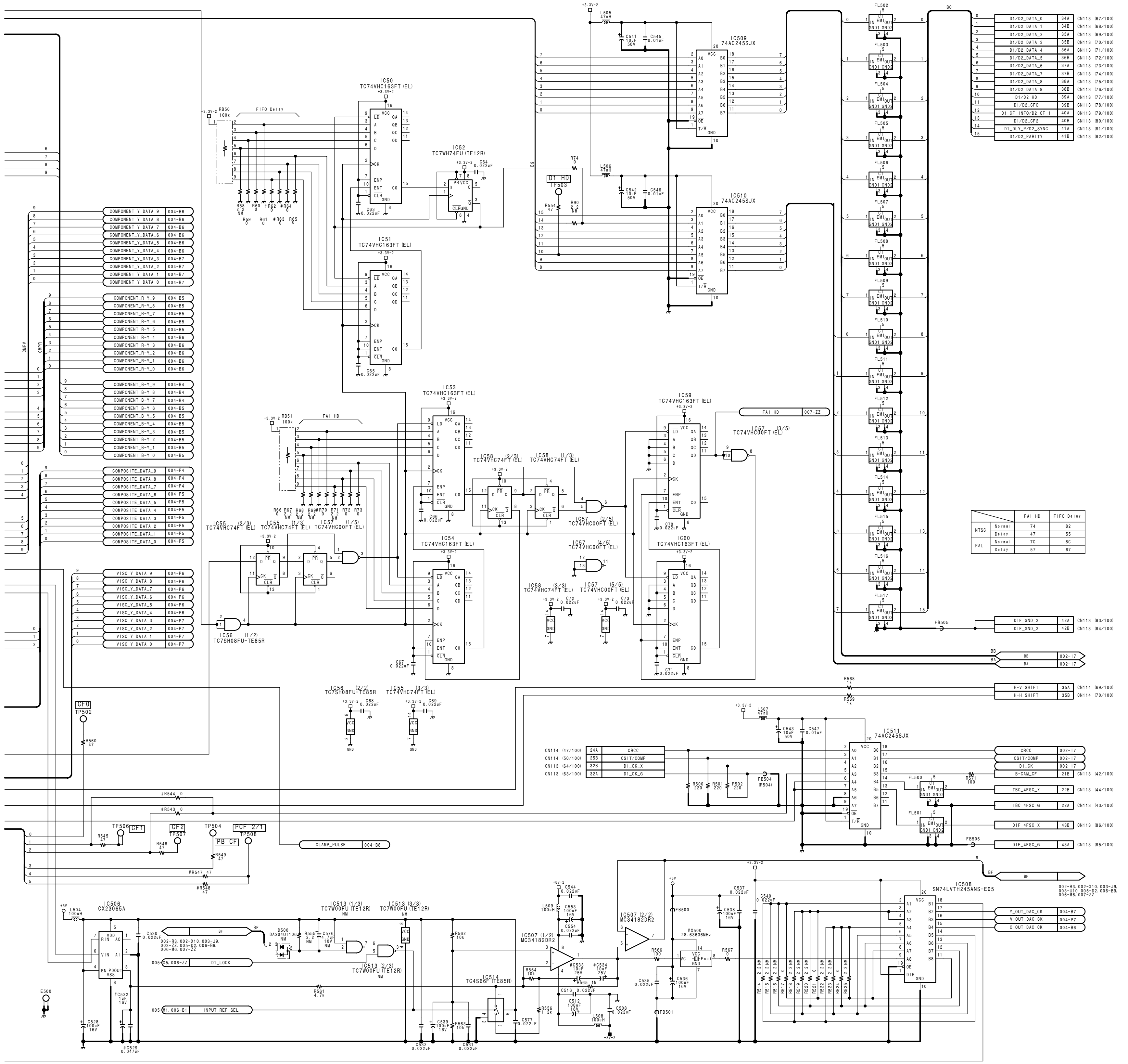

		FAI HD	FIFO Delay
NTSC	Normal	74	82
	Delay	47	55
PAL	Normal	7C	8C
	Delay	57	67

#	NTSC	PAL
C522	1uF 16V 20%	NM
C529	NM	0.047uF 25V B
C533	10uF 25V 20%	68uF 6.3V 20%
C534	10uF 25V 20%	68uF 6.3V 20%
R62	0	NM
R63	0	NM
R64	NM	0
R70	0	NM
R543	NM	0
R544	0	NM
R547	47 1/10W 5%	NM
R548	NM	47 1/10W 5%
R550	NM	0
R552	0	NM
X500	28.63636MH	35.46895MH

Digital Video Data Encoder

VPR-1 BOARD (3/7)

BOARD NO. 1-648-532-18
BOARD'S LOT NO. 909-
DVW-A500(J,UC):VPR-1A MCB
DVW-500 (J,UC):VPR-1 MCB

DVW-A500_VPR-1_002_3

 VPR-1 (4/7)

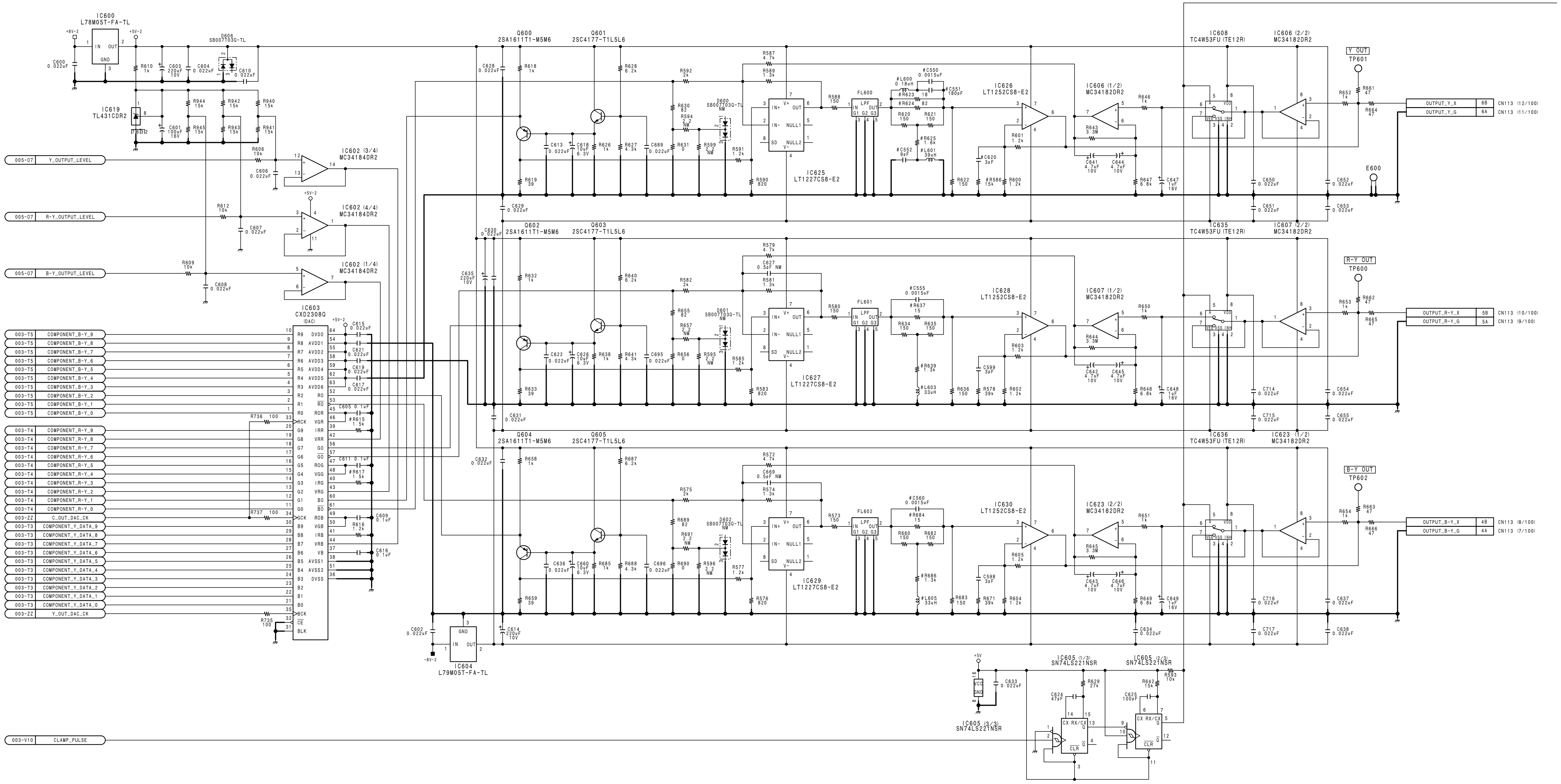

1 2 3 4 5

A B C D E F G H

 1-12 (f)

 VPR-1 (4/7)

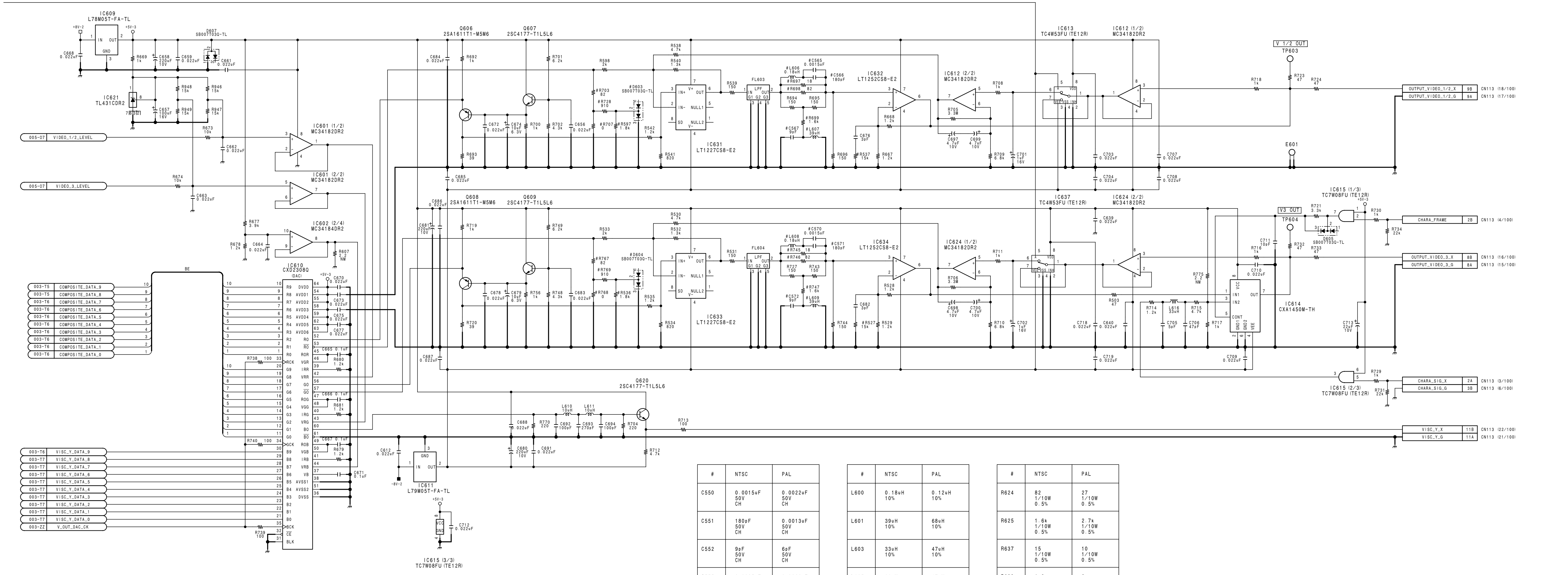

#	NTSC	PAL
C550	0.0015uF 50V CH	0.0022uF 50V CH
C551	180pF 50V CH	0.0013uF 50V CH
C552	9pF 50V CH	6pF 50V CH
C555	0.0015uF 50V CH	0.0022uF 50V CH
C560	0.0015uF 50V CH	0.0022uF 50V CH
C565	0.0015uF 50V CH	0.0022uF 50V CH
C566	180pF 50V CH	0.0013uF 50V CH
C567	9pF 50V CH	6pF 50V CH
C570	0.0015uF 50V CH	0.0022uF 50V CH
C571	180pF 50V CH	0.0013uF 50V CH
C572	9pF 50V CH	6pF 50V CH
C620	3pF 50V CJ	4pF 50V CH
D603	NM	SB007T03Q
D604	NM	SB007T03Q

#	NTSC	PAL
L600	0.18uH 10%	0.12uH 10%
L601	39uH 10%	68uH 10%
L603	33uH 10%	47uH 10%
L605	33uH 10%	47uH 10%
L606	0.18uH 10%	0.12uH 10%
L607	39uH 10%	68uH 10%
L608	0.18uH 10%	0.12uH 10%
L609	39uH 10%	68uH 10%
R527	15k 1/10W 0.5%	39k 1/10W 0.5%
R536	NM	1.8k 1/10W 0.5%
R537	15k 1/10W 0.5%	39k 1/10W 0.5%
R586	15k 1/10W 0.5%	30k 1/10W 0.5%
R597	NM	1.8k 1/10W 0.5%
R615	1.5k 1/10W 0.5%	1.8k 1/10W 0.5%
R617	1.5k 1/10W 0.5%	1.8k 1/10W 0.5%
R623	18 1/10W 0.5%	10 1/10W 0.5%

#	NTSC	PAL
R624	82 1/10W 0.5%	27 1/10W 0.5%
R625	1.6k 1/10W 0.5%	2.7k 1/10W 0.5%
R637	15 1/10W 0.5%	10 1/10W 0.5%
R639	1.3k 1/10W 0.5%	2k 1/10W 0.5%
R684	15 1/10W 0.5%	10 1/10W 0.5%
R686	1.3k 1/10W 0.5%	2k 1/10W 0.5%
R697	18 1/10W 0.5%	10 1/10W 0.5%
R698	82 1/10W 0.5%	27 1/10W 0.5%
R699	1.6k 1/10W 0.5%	2.7k 1/10W 0.5%
R703	82 1/10W 0.5%	47 1/10W 0.5%
R707	0 — —	36 1/10W 0.5%
R728	NM	910 1/10W 0.5%
R745	18 1/10W 0.5%	10 1/10W 0.5%
R746	82 1/10W 0.5%	27 1/10W 0.5%
R747	1.6k 1/10W 0.5%	2.7k 1/10W 0.5%
R767	82 1/10W 0.5%	47 1/10W 0.5%
R768	0 — —	36 1/10W 0.5%
R769	NM	910 1/10W 0.5%

Output Video Signal D/A Converter

VPR-1 BOARD (4/7)

BOARD NO. 1-648-532-18
BOARD'S LOT NO. 909-
DVW-A500 (J, UC) :VPR-1A MCB
DVW-500 (J, UC) :VPR-1 MCB

DVW-A500_VPR-1_002_4

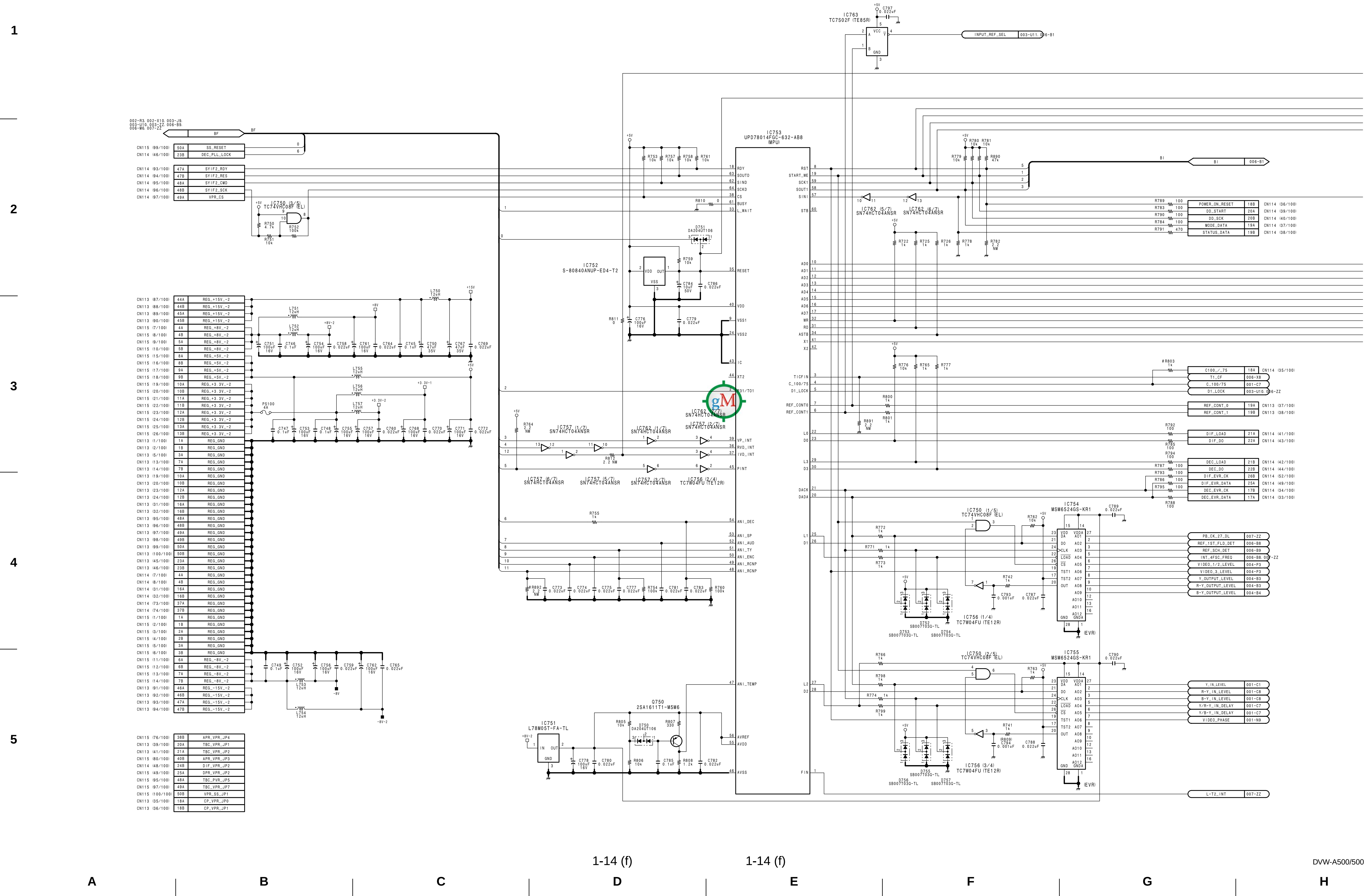

IC753
UPD78014FGC-632-AB8
(MPU)
IC763
TC7S02F (TE85R)
IC752
S-80840ANUP-ED4-T2
IC751
L78M05T-FA-TL
Q750
2SA1611T1-M5M6
IC754
MSM6524GS-KR1
IC755
MSM6524GS-KR1
IC750 (3/5)
TC74VHC08F (EL)
IC756 (1/4)
TC7W04FU (TE12R)
IC756 (3/4)
TC7W04FU (TE12R)

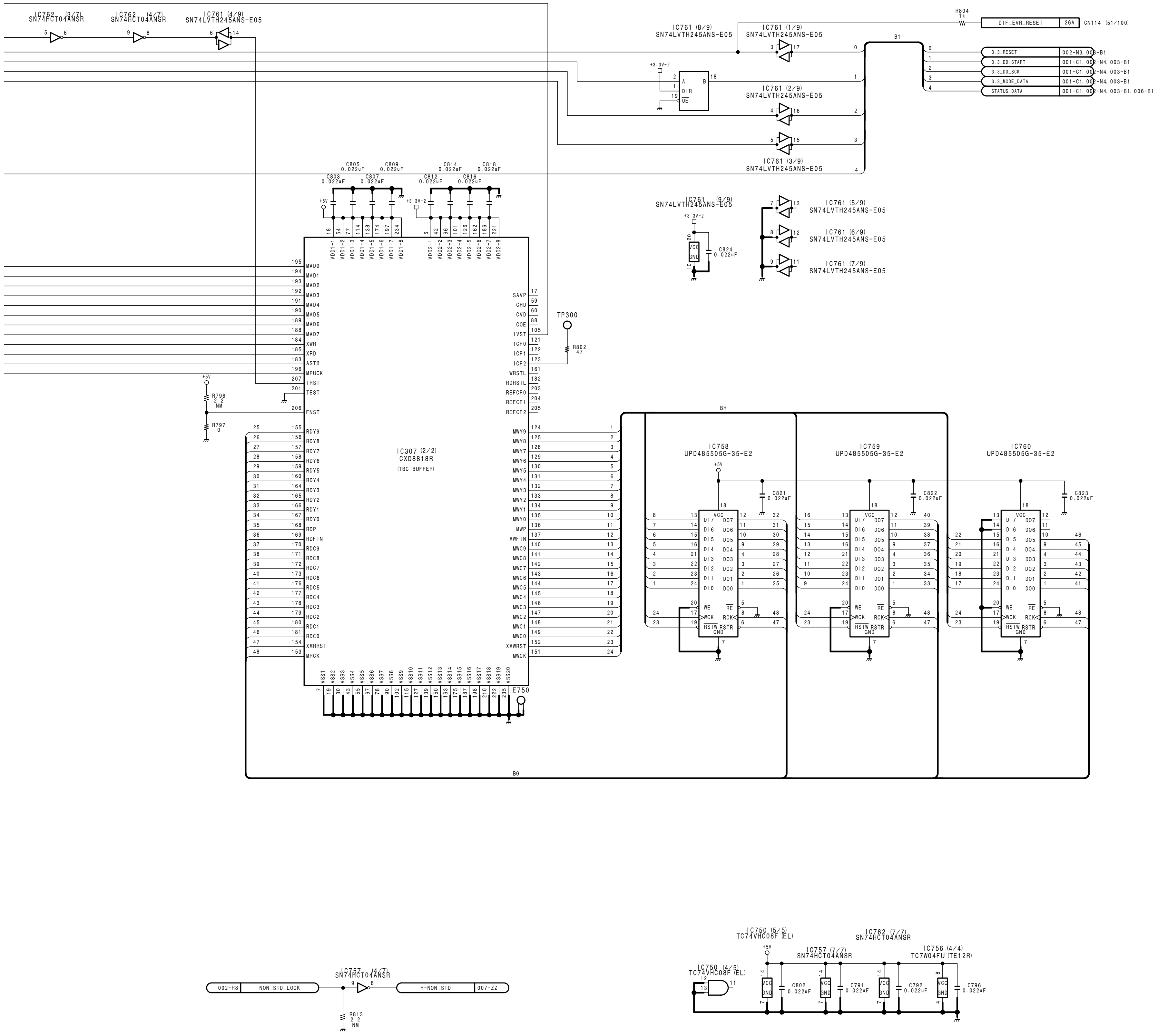

#	NTSC	PAL
R803	1k 1/10W 5%	NM

Video Process Control

VPR-1 BOARD (5/7)

BOARD NO. 1-648-532-18
BOARD'S LOT NO. 909-
DVW-A500 (J, UC) : VPR-1A MCB
DVW-500 (J, UC) : VPR-1 MCB

DVW-A500_VPR-1_002_5

1

2

3

4

5

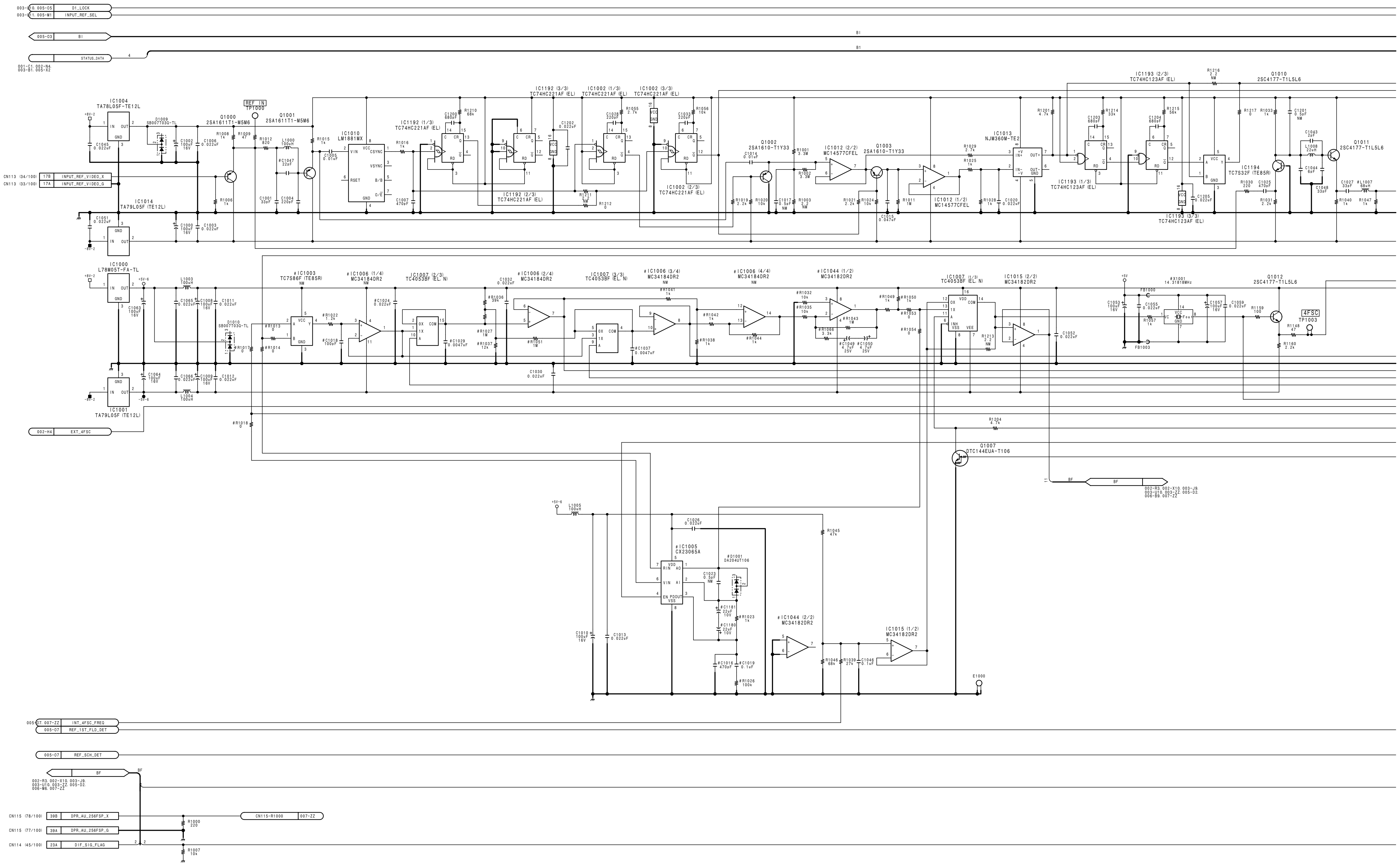

A B C D E F G H

 VPR-1 (6/7)

1

2

3

4

5

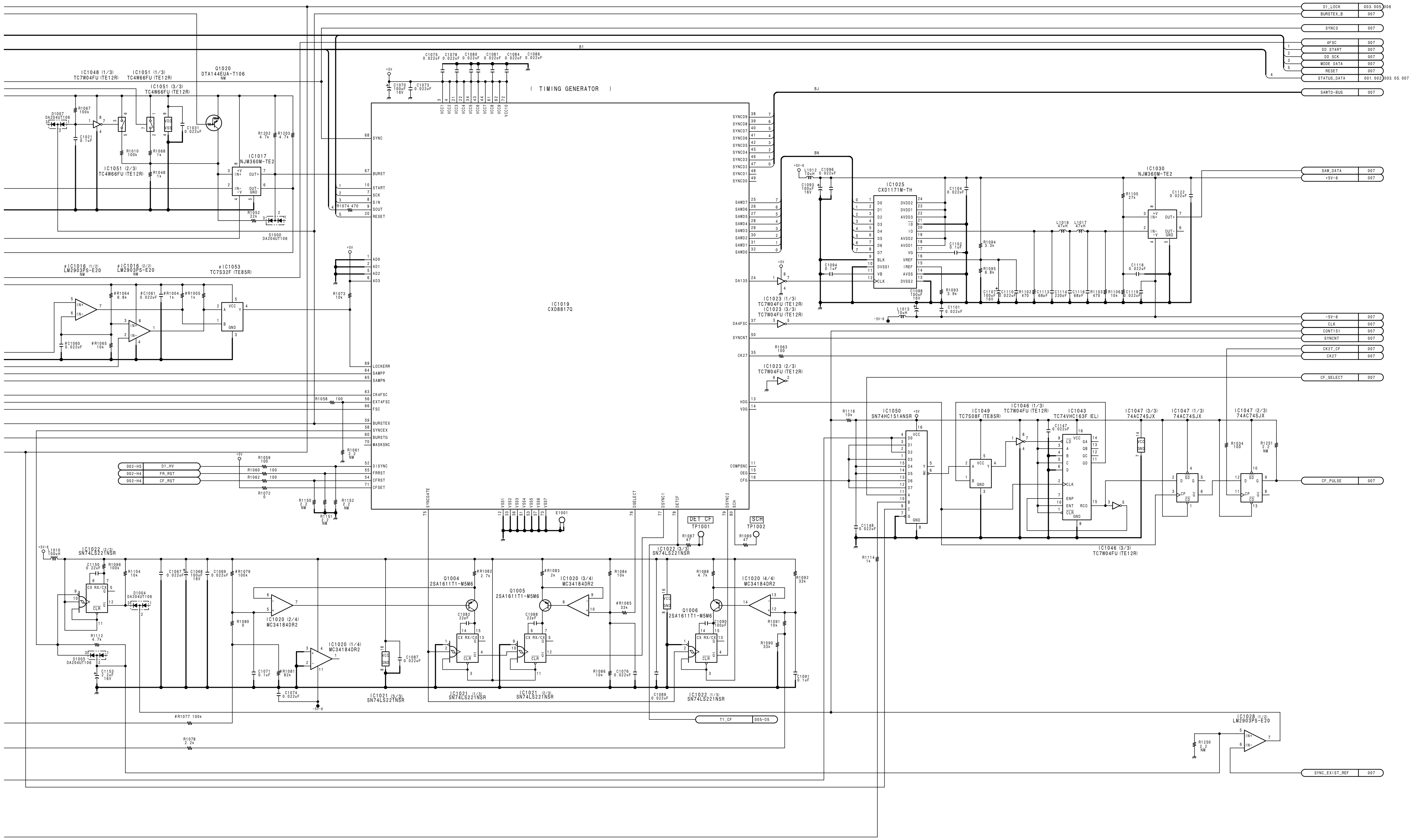

#	NTSC	PAL
C1016	470pF 50V CH	NM
C1018	NM	100pF 50V CH
C1019	0.1uF 25V F	NM
C1024	NM	0.022uF 50V B
C1029	NM	0.0047uF 16V
C1037	NM	0.0047uF 16V
C1047	22pF 50V CH	NM
C1049	NM	4.7uF 25V 20%
C1050	NM	4.7uF 25V 20%
C1060	NM	0.022uF 50V B
C1061	NM	0.022uF 50V B
C1180	22uF 10V 20%	NM
C1181	22uF 10V 20%	NM
D1001	DA204UT106	NM
IC1003	NM	TC7S86F (TE
IC1005	CX23065A	NM
IC1006	NM	MC34184DR2
IC1016	NM	LM2903PS-E
IC1044	NM	MC34182DR2
IC1053	NM	TC7S32F (TE
L1007	68uH 10%	39uH 10%
R1004	NM	1k 1/10W 5%
R1005	NM	1k 1/10W 5%
R1013	NM	0
R1014	0	NM
R1017	NM	0
R1018	0	NM
R1022	NM	1.2k 1/10W 5%
R1023	1k 1/10W 5%	NM
R1026	100k 1/10W 5%	NM
R1027	NM	1M 1/10W 5%
R1032	NM	10k 1/10W 0.5%
R1035	NM	10k 1/10W 0.5%
R1036	NM	39k 1/10W 0.5%
R1037	NM	12k 1/10W 0.5%
R1038	NM	1k 1/10W 0.5%

#	NTSC	PAL
R1041	NM	1k 1/10W 0.5%
R1042	NM	1k 1/10W 0.5%
R1043	NM	1M 1/10W 5%
R1044	NM	1k 1/10W 0.5%
R1049	NM	1k 1/10W 0.5%
R1050	NM	1k 1/10W 0.5%
R1051	NM	1M 1/10W 5%
R1053	NM	0
R1054	0	NM
R1064	NM	6.8k 1/10W 5%
R1065	NM	10k 1/10W 5%
R1066	NM	3.3k 1/10W 0.5%
R1077	100k 1/10W 5%	22k 1/10W 0.5%
R1079	100k 1/10W 5%	22k 1/10W 0.5%
R1081	NM	82k 1/10W 0.5%
R1082	2.7k 1/10W 0.5%	4.7k 1/10W 0.5%
R1083	2k 1/10W 0.5%	1k 1/10W 0.5%
R1085	33k 1/10W 5%	22k 1/10W 5%
X1001	14.31818MH	17.734475M

Time Ref Signal (1)

VPR-1 BOARD (6/7)

BOARD NO. 1-648-532-18
BOARD'S LOT NO. 909-
DVW-A500 (J, UC) :VPR-1A MCB
DVW-500 (J, UC) :VPR-1 MCB
DVW-A500_VPR-1_002_6

I | J | K | L | M | N | O | P

1
2
3
4
5

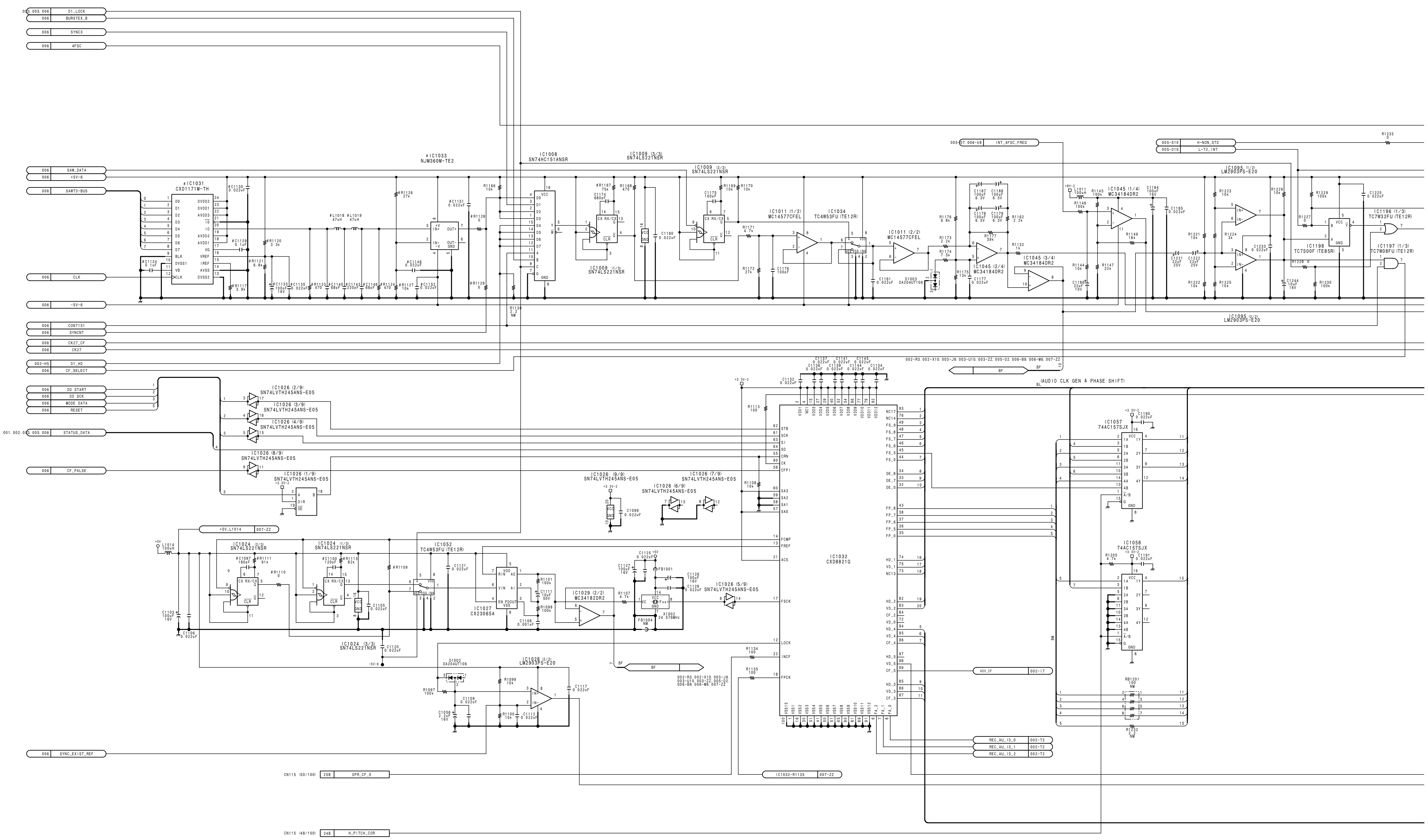

DVW-A500/500

A B C D E F G H

http://getMANUAL.com

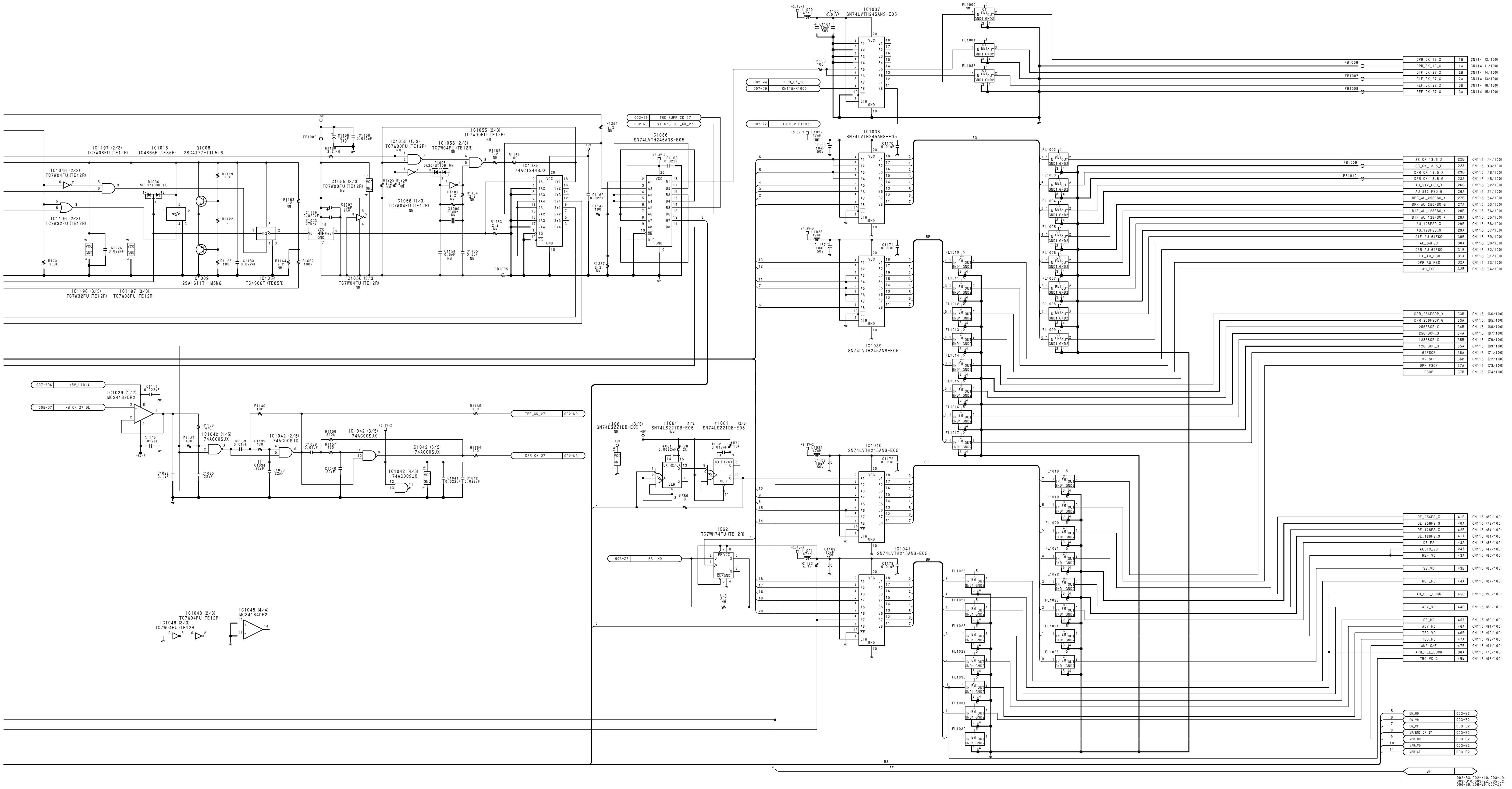

#	NTSC	PAL
C61	NM	0.0022uF 50V CH
C62	NM	0.047uF 50V F
C1097	180pF 50V CH	NM
C1100	120pF 50V CH	150pF 50V CH
C1124	NM	0.1uF 25V F
C1129	NM	0.1uF 25V F
C1130	NM	0.022uF 50V B

#	NTSC	PAL
C1133	NM	100uF 16V
C1135	NM	0.022uF 50V B
C1140	NM	68pF 50V CH
C1143	NM	220pF 50V CH
C1146	NM	68pF 50V CH
C1149	NM	0.022uF 50V B
C1151	NM	0.022uF 50V B

#	NTSC	PAL
C1152	NM	0.022uF 50V B
IC61	NM	SN74LS221D
IC1031	NM	CXD1171M-T
IC1033	NM	NJM360M-TE
L1018	NM	47uH 10%
L1019	NM	47uH 10%
R78	NM	2k 1/10W 0.5%
R79	NM	15k 1/10W 0.5%

#	NTSC	PAL
R80	0	NM
R1109	NM	0
R1110	0	NM
R1111	91k 1/10W 0.5%	NM
R1115	82k 1/10W 0.5%	39k 1/10W 0.5%
R1117	NM	3.9k 1/10W 0.5%
R1120	NM	3.3k 1/10W 0.5%

#	NTSC	PAL
R1121	NM	6.8k 1/10W 0.5%
R1123	NM	470 1/10W 0.5%
R1124	NM	470 1/10W 0.5%
R1126	NM	27k 1/10W 0.5%
R1127	NM	10k 1/10W 0.5%
R1128	NM	0
R1129	0	NM

#	NTSC	PAL
R1167	75k 1/10W 0.5%	82k 1/10W 0.5%

Time Ref Signal (2) & Audio Clock Generator

VPR-1 BOARD (7/7)

BOARD NO. 1-648-532-18
BOARD'S LOT NO. 909-
DVW-A500 (J, UC) : VPR-1A MCB
DVW-500 (J, UC) : VPR-1 MCB

DVW-A500_VPR-1_002_7

VPR-1 (1/7)

*PART CHANGE INFORMATION

PART CHANGE INFORMATION			CHANGE	REPAIR PART	SIMULATANEOUSIY
REF NO.	OLD	NEW	LOT NO.	FOR OLD PART	CHANGE PART
IC113	SN74LVT245ANS-E05	→ SN74LVTH245ANS-E05	905	SN74LVTH245ANS-E05	IC113, 118, 119, 120 IC314, 315, 500-503 IC508, 761, 1026 IC1036-1041
IC118					
IC119					
IC120					

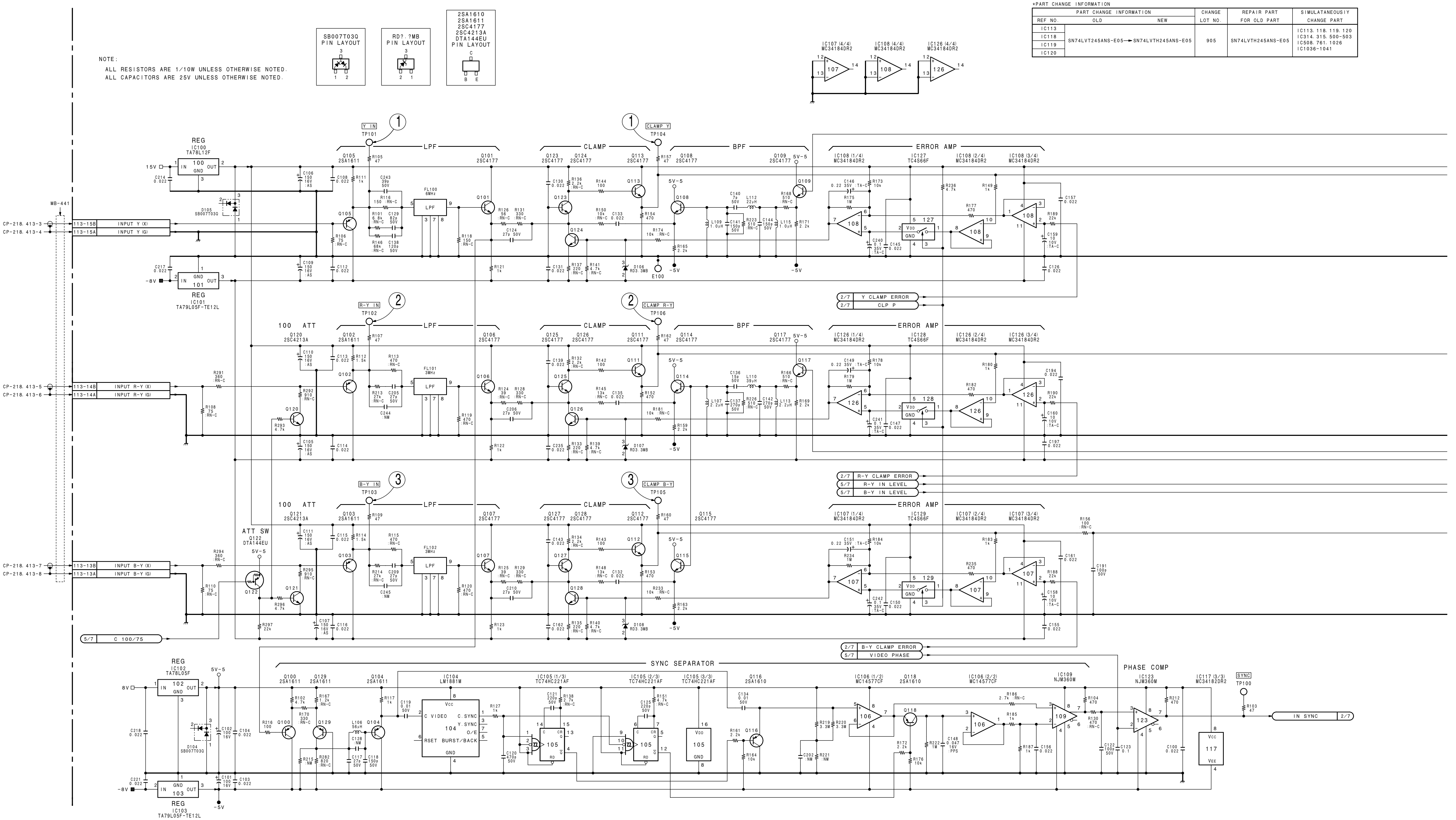

1-6 (e)

1
2
3
4
5

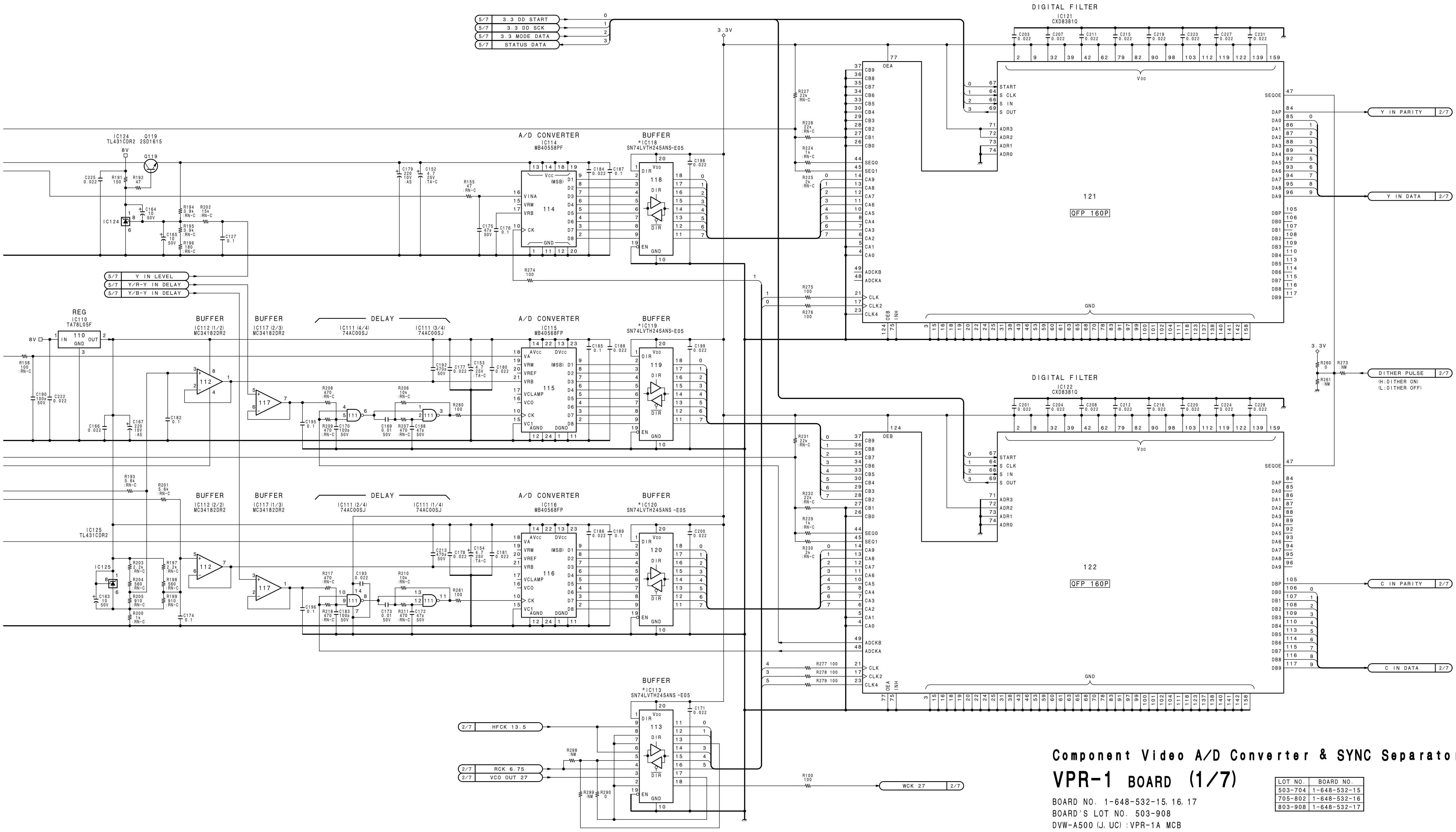

Component Video A/D Converter & SYNC Separator

VPR-1 BOARD (1/7)

BOARD NO. 1-648-532-15, 16, 17
BOARD'S LOT NO. 503-908
DVW-A500 (J, UC) : VPR-1A MCB
DVW-500 (J, UC) : VPR-1 MCB

DVW-VPR1-NTSC-REC-S/M-04-E

LOT NO.	BOARD NO.
503-704	1-648-532-15
705-802	1-648-532-16
803-908	1-648-532-17

 VPR-1 (2/7)

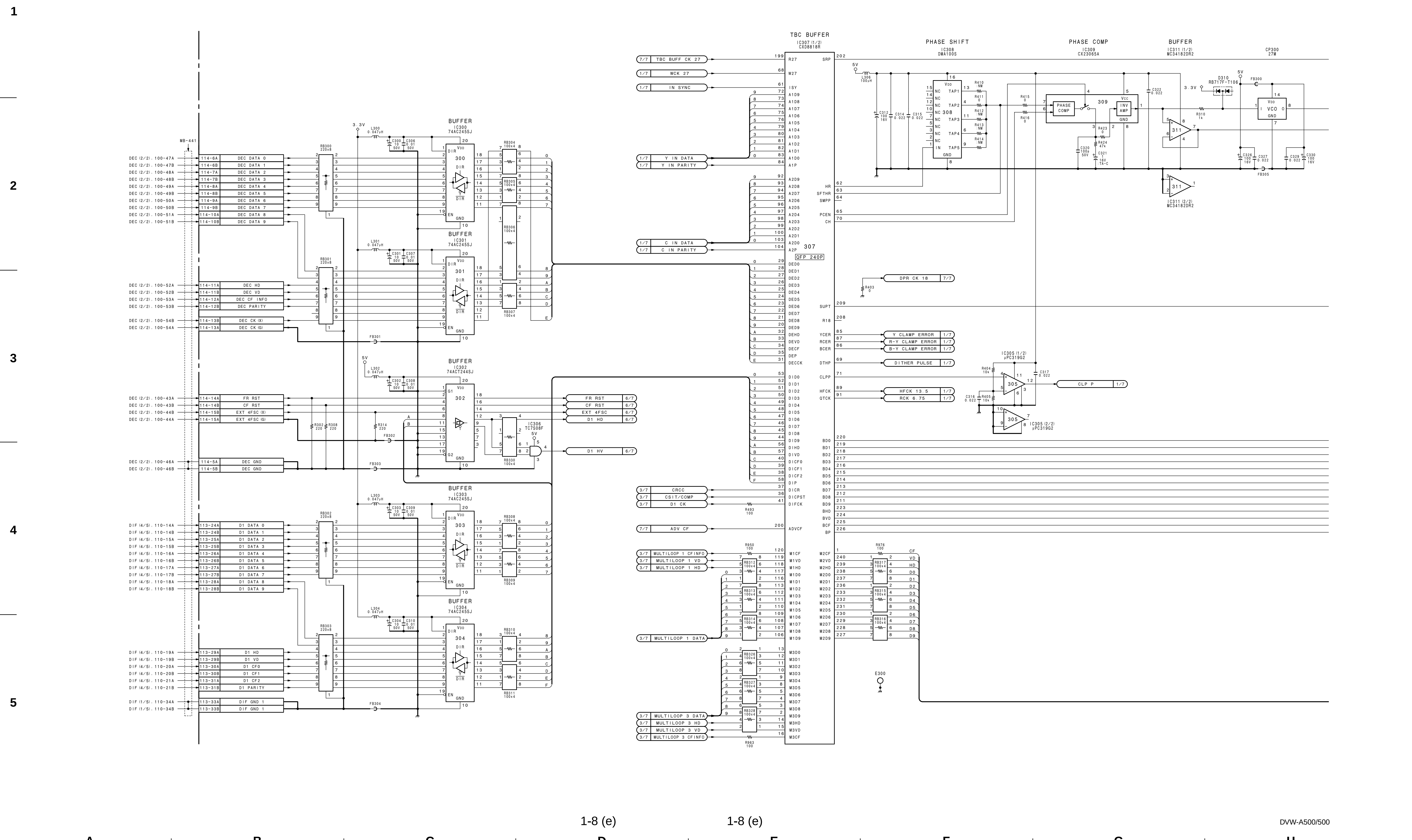
TBC BUFFER
IC307 (1/2) CXD8818R
PHASE SHIFT
IC308 DMA100S
PHASE COMP
IC309 CX23065A
BUFFER
IC311 (1/2) MC34182DR2
CP300 27M
BUFFER IC300 74AC245SJ
BUFFER IC301 74AC245SJ
BUFFER IC302 74AC7244SJ
BUFFER IC303 74AC245SJ
BUFFER IC304 74AC245SJ
IC305 (1/2) μPC319G2
IC305 (2/2) μPC319G2
IC306 TC7S08F
IC311 (2/2) MC34182DR2
MB-441
DEC DATA 0
DEC DATA 1
DEC DATA 2
DEC DATA 3
DEC DATA 4
DEC DATA 5
DEC DATA 6
DEC DATA 7
DEC DATA 8
DEC DATA 9
DEC HD
DEC VD
DEC CF INFO
DEC PARITY
DEC CK (X)
DEC CK (G)
FR RST
CF RST
EXT 4FSC (X)
EXT 4FSC (G)
DEC GND
D1 DATA 0
D1 DATA 1
D1 DATA 2
D1 DATA 3
D1 DATA 4
D1 DATA 5
D1 DATA 6
D1 DATA 7
D1 DATA 8
D1 DATA 9
D1 HD
D1 VD
D1 CF0
D1 CF1
D1 CF2
D1 PARITY
DIF GND 1
TBC BUFF CK 27
WCK 27
IN SYNC
Y IN DATA
Y IN PARITY
C IN DATA
C IN PARITY
DPR CK 18
Y CLAMP ERROR
R-Y CLAMP ERROR
B-Y CLAMP ERROR
DITHER PULSE
HFCK 13.5
RCK 6.75
CLP P
D1 HV
CRCC
CSIT/COMP
D1 CK
ADV CF
MULTILOOP 1 CFINFO
MULTILOOP 1 VD
MULTILOOP 1 HD
MULTILOOP 1 DATA
MULTILOOP 3 DATA
MULTILOOP 3 HD
MULTILOOP 3 VD
MULTILOOP 3 CFINFO
PHASE COMP
INV AMP
VCO
D310 RB717F-T106
E300

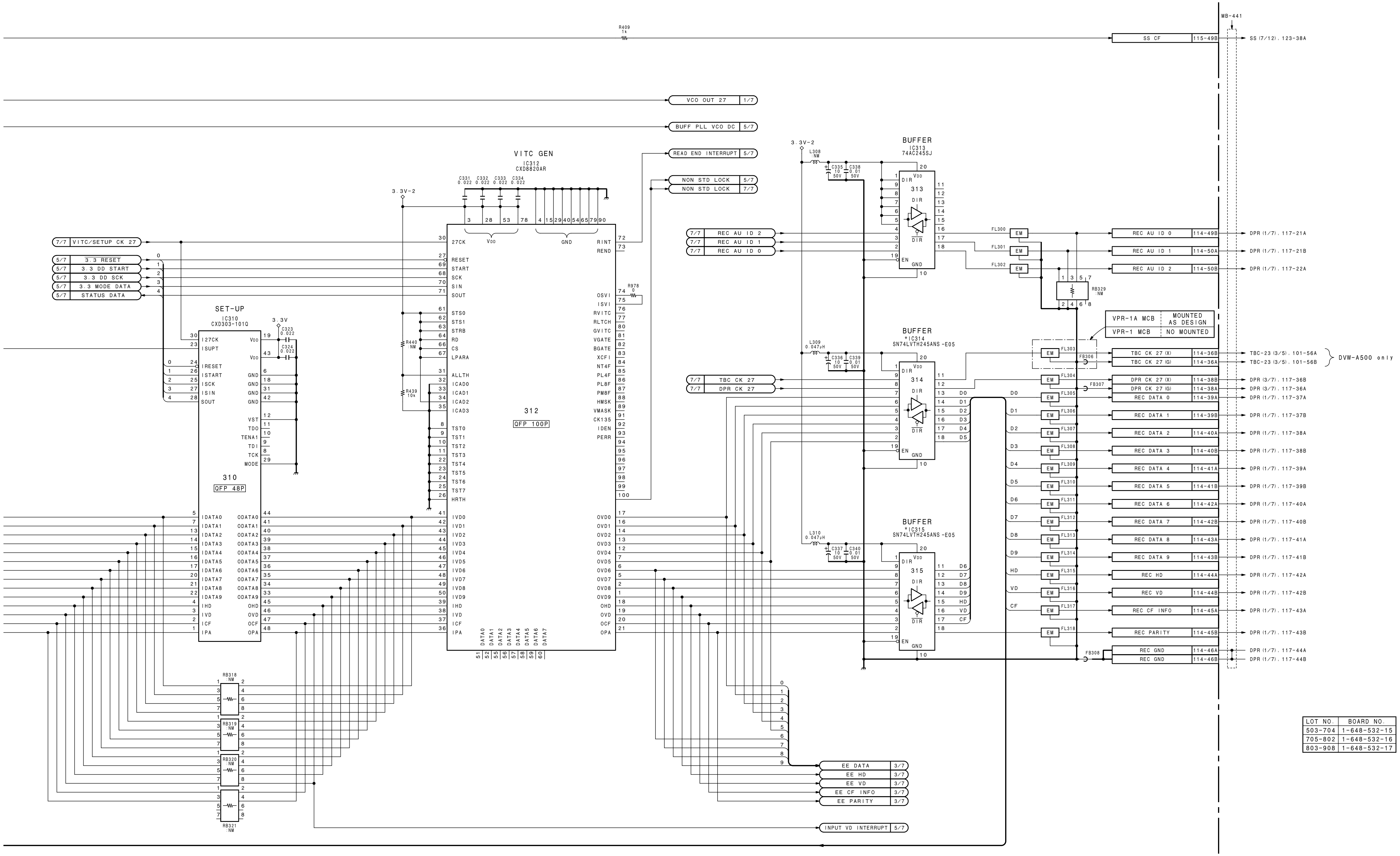

LOT NO.	BOARD NO.
503-704	1-648-532-15
705-802	1-648-532-16
803-908	1-648-532-17

*PART CHANGE INFORMATION

PART CHANGE INFORMATION			CHANGE	REPAIR PART	SIMULATANEOUSIY
REF NO.	OLD	NEW	LOT NO.	FOR OLD PART	CHANGE PART
IC314 IC315	SN74LVT245ANS-E05 →	SN74LVTH245ANS-E05	905	SN74LVTH245ANS-E05	IC113, 118, 119, 120 IC314, 315, 500-503 IC508, 761, 1026 IC1036-1041

NOTE;
ALL RESISTORS ARE 1/10W UNLESS OTHERWISE NOTED.
ALL CAPACITORS ARE 25V UNLESS OTHERWISE NOTED.

Input Digital Video Data Processor

VPR-1 BOARD (2/7)

BOARD NO. 1-648-532-15, 16, 17
BOARD'S LOT NO. 503-908
DVW-A500 (J, UC) : VPR-1A MCB
DVW-500 (J, UC) : VPR-1 MCB
DVW-VPR1-NTSC-REC-S/M-04-E

VPR-1 (3/7)

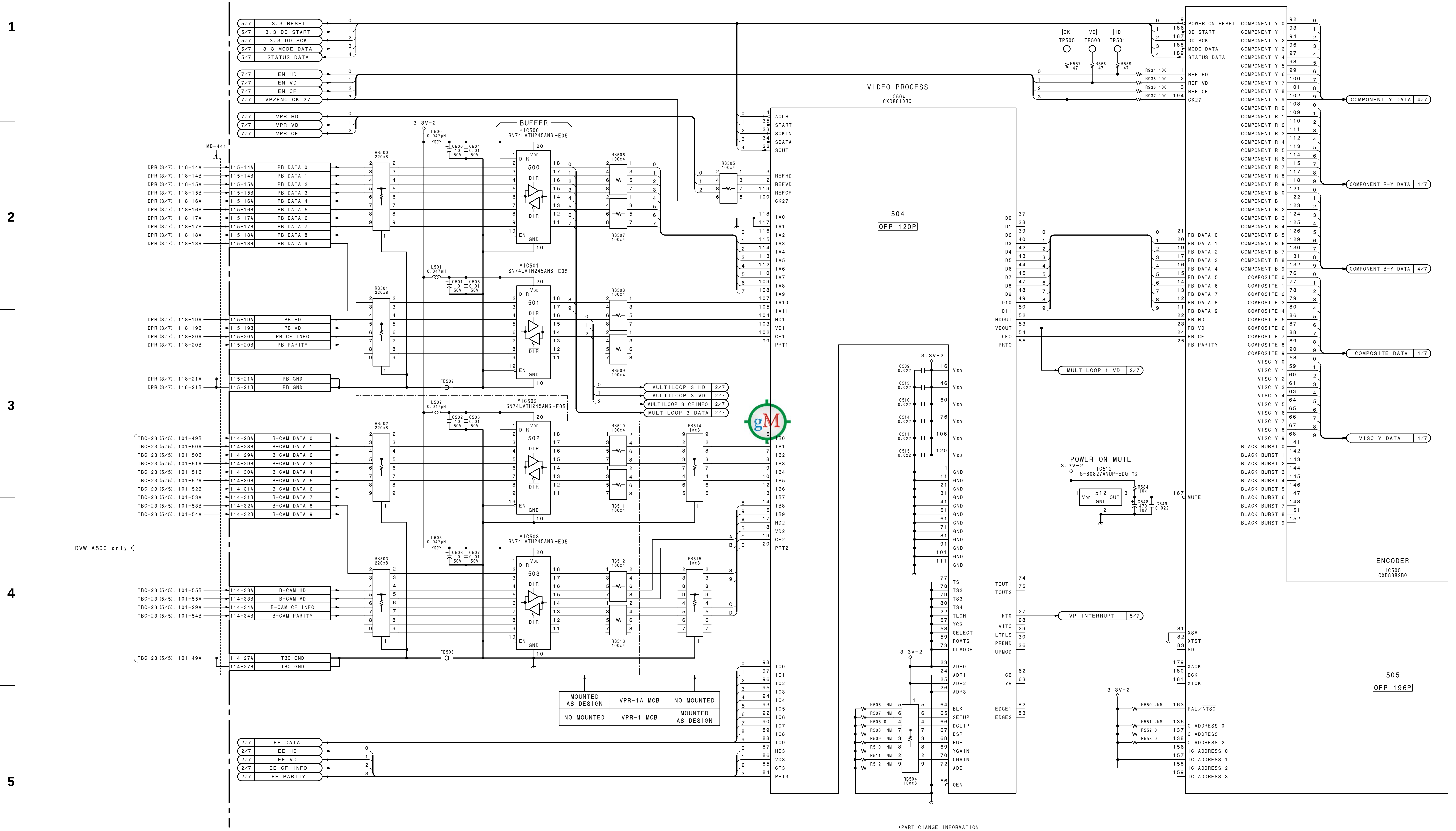

*PART CHANGE INFORMATION

PART CHANGE INFORMATION			CHANGE	REPAIR PART	SIMULATANEOUSIY
REF NO.	OLD	NEW	LOT NO.	FOR OLD PART	CHANGE PART
IC500 IC501 IC502 IC503 IC508	SN74LVT245ANS-E05 →	SN74LVTH245ANS-E05	905	SN74LVTH245ANS-E05	IC113, 118, 119, 120 IC314, 315, 500-503 IC508, 761, 1026 IC1036-1041

1-10 (e)

A B C D E F G H

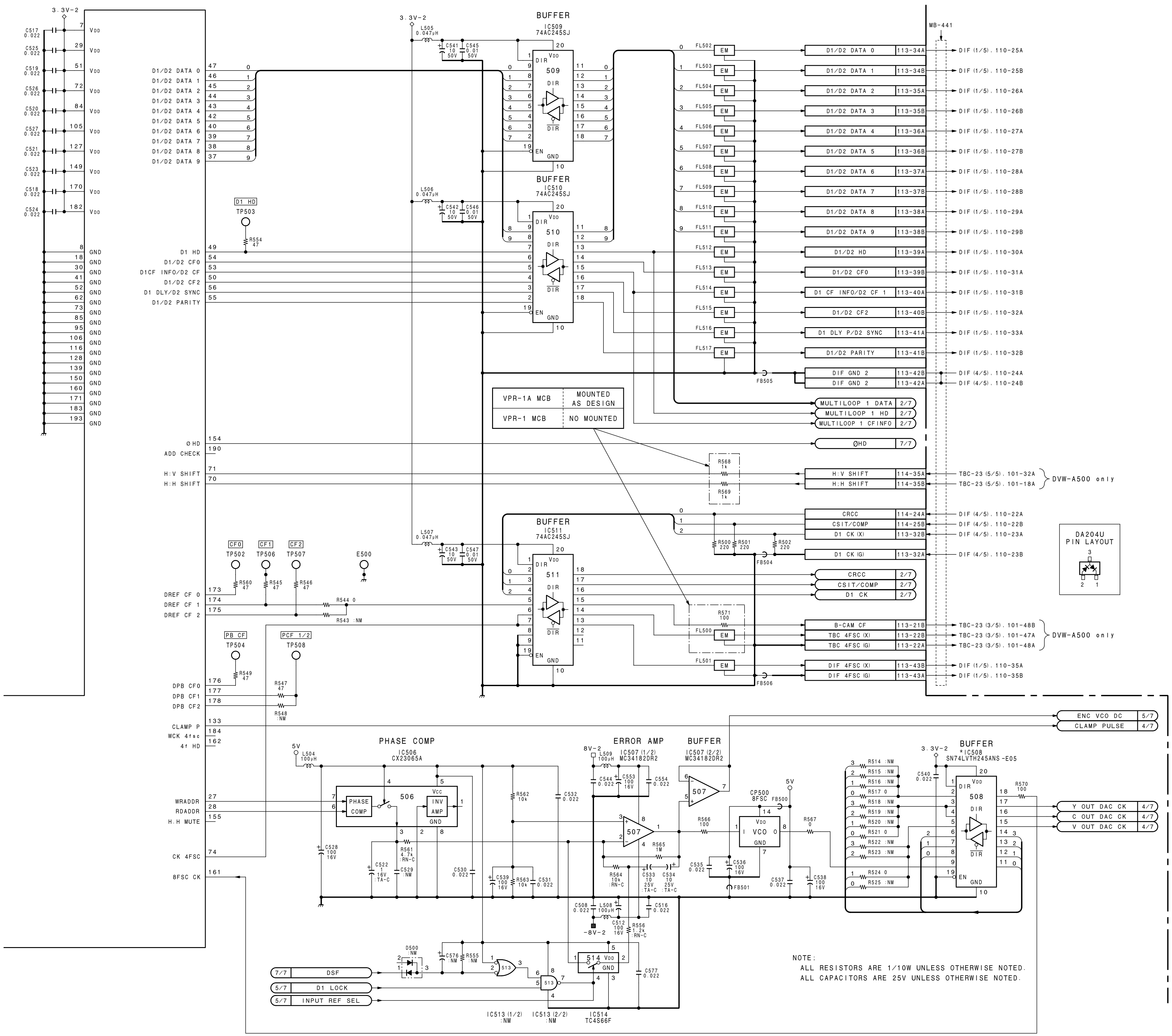

LOT NO.	BOARD NO.
503-704	1-648-532-15
705-802	1-648-532-16
803-908	1-648-532-17

Digital Video Data Encoder

VPR-1 BOARD (3/7)

BOARD NO. 1-648-532-15, 16, 17
BOARD'S LOT NO. 503-908
DVW-A500 (J, UC) : VPR-1A MCB
DVW-500 (J, UC) : VPR-1 MCB

DVW-VPR1-NTSC-REC-S/M-04-E

VPR-1 (4/7)

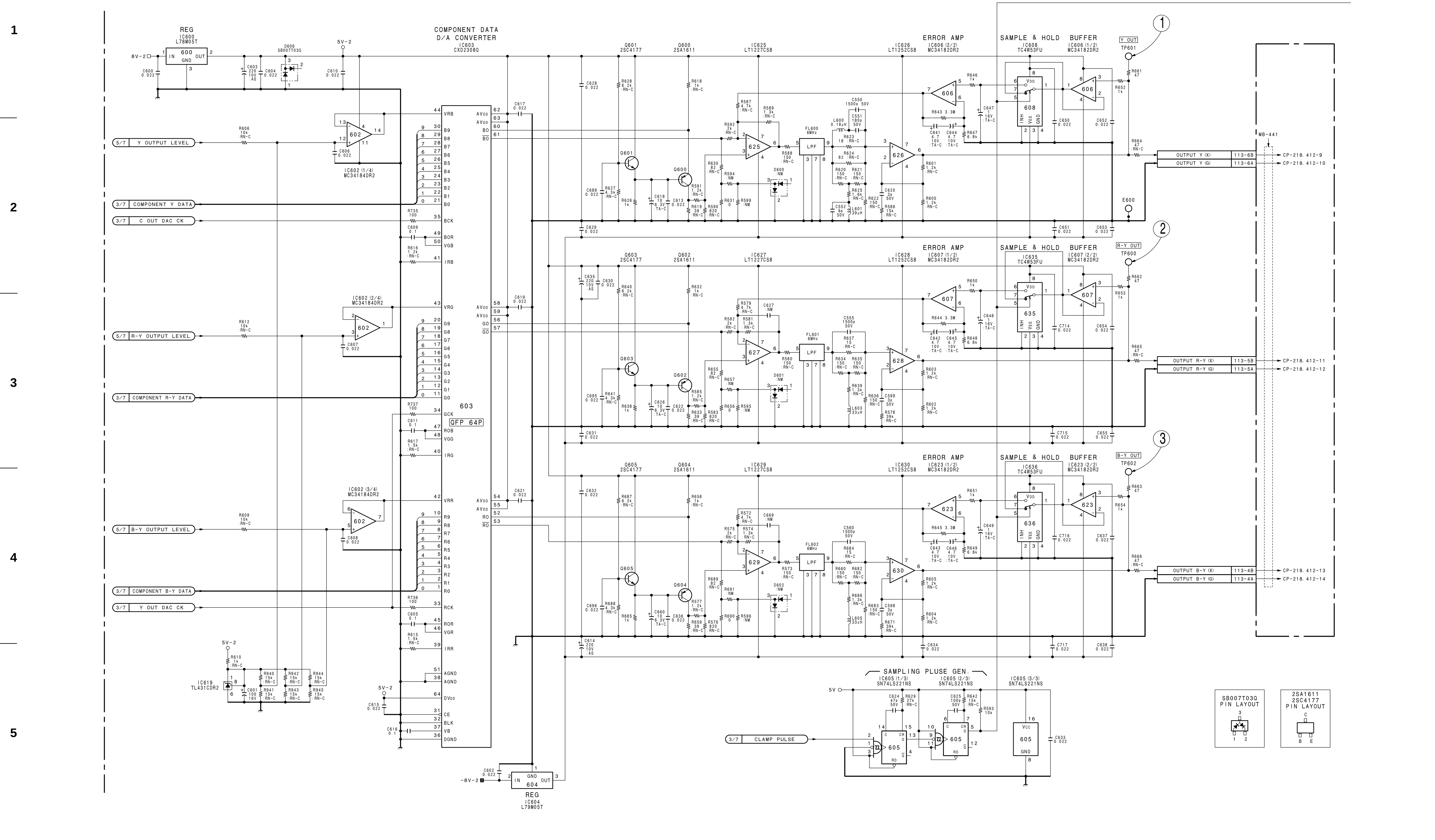

1-12 (e)

A | B | C | D | E | F | G | H

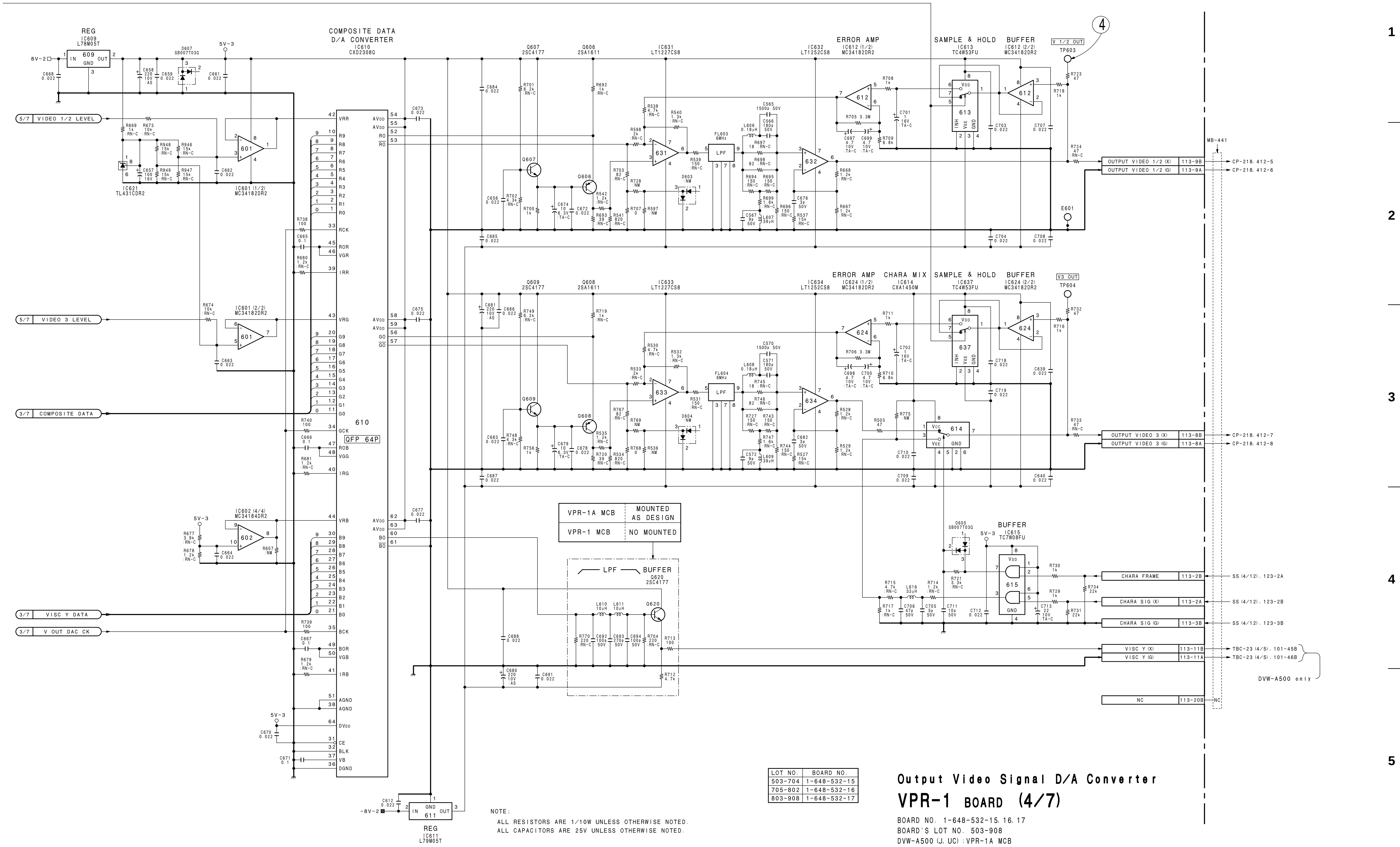

NOTE:
ALL RESISTORS ARE 1/10W UNLESS OTHERWISE NOTED.
ALL CAPACITORS ARE 25V UNLESS OTHERWISE NOTED.

LOT NO.	BOARD NO.
503-704	1-648-532-15
705-802	1-648-532-16
803-908	1-648-532-17

Output Video Signal D/A Converter

VPR-1 BOARD (4/7)

BOARD NO. 1-648-532-15, 16, 17
BOARD'S LOT NO. 503-908
DVW-A500 (J, UC) : VPR-1A MCB
DVW-500 (J, UC) : VPR-1 MCB

DVW-VPR1-NTSC-REC-S/M-04-E

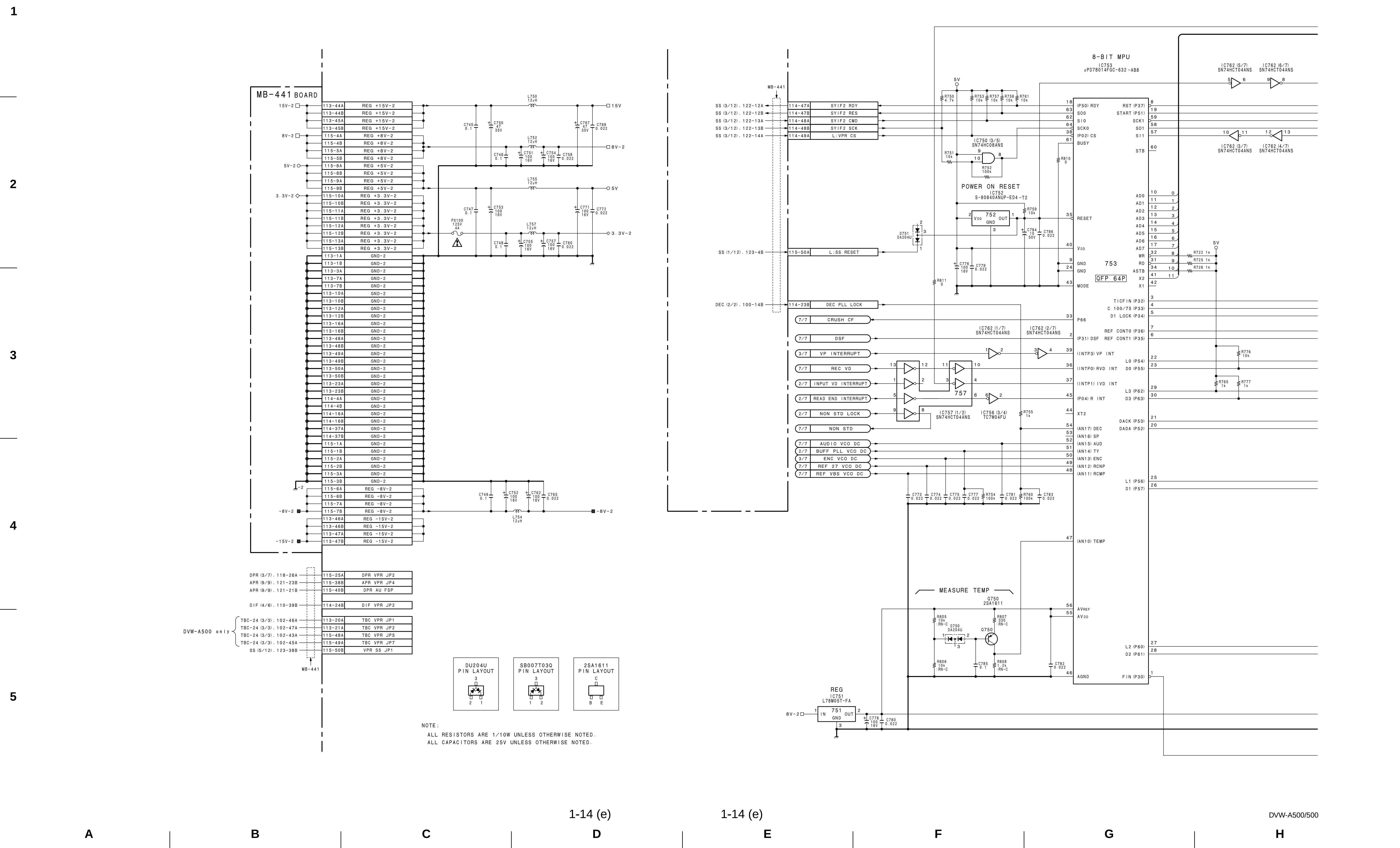
MB-441 BOARD
8-BIT MPU
IC753
POWER ON RESET
IC752
MEASURE TEMP
REG
IC751
DU204U PIN LAYOUT
SB007T03Q PIN LAYOUT
2SA1611 PIN LAYOUT
NOTE:
ALL RESISTORS ARE 1/10W UNLESS OTHERWISE NOTED.
ALL CAPACITORS ARE 25V UNLESS OTHERWISE NOTED.

http://getMANUAL.com

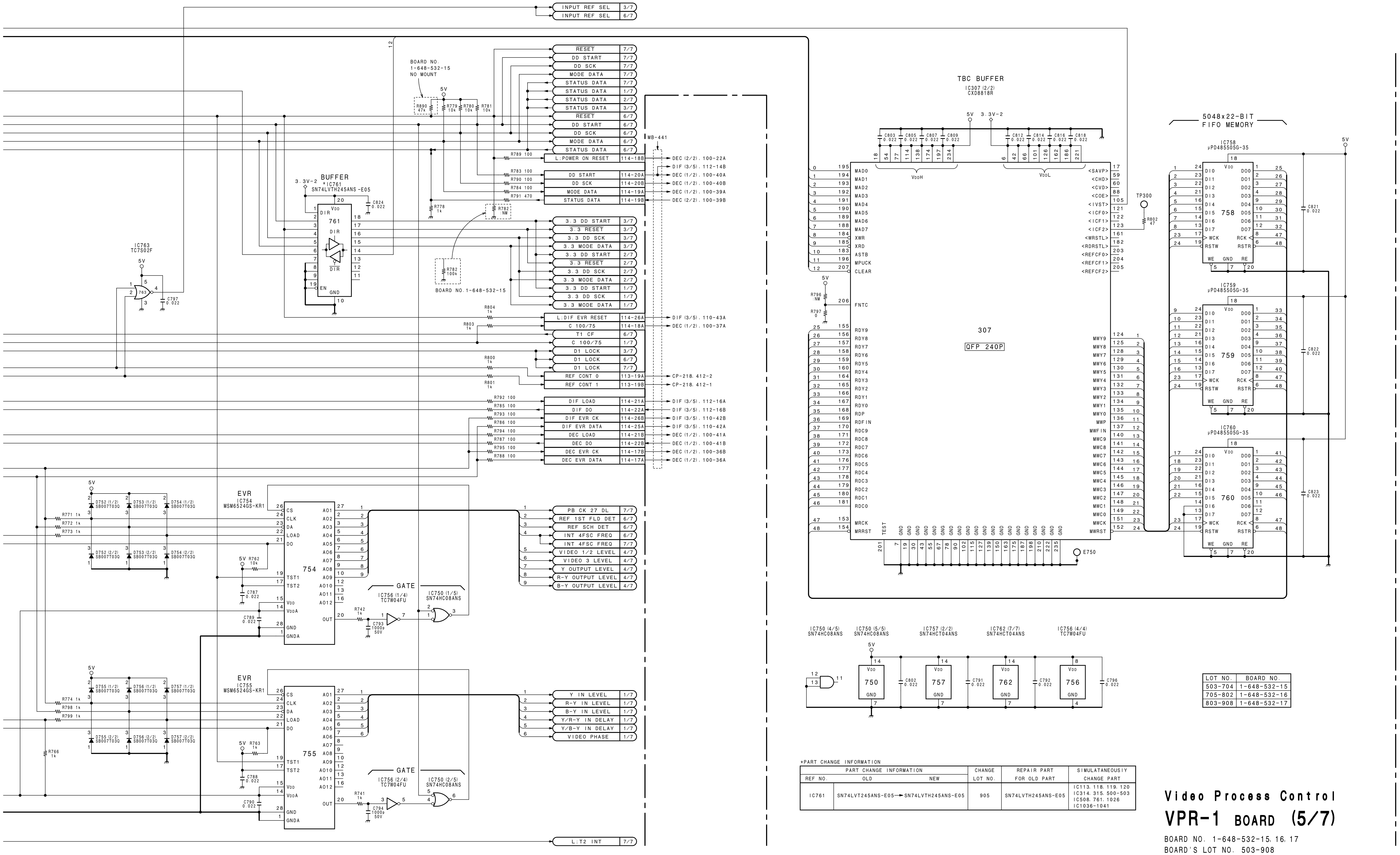

LOT NO.	BOARD NO.
503-704	1-648-532-15
705-802	1-648-532-16
803-908	1-648-532-17

*PART CHANGE INFORMATION

REF NO.	PART CHANGE INFORMATION OLD	PART CHANGE INFORMATION NEW	CHANGE LOT NO.	REPAIR PART FOR OLD PART	SIMULATANEOUSIY CHANGE PART
IC761	SN74LVT245ANS-E05	SN74LVTH245ANS-E05	905	SN74LVTH245ANS-E05	IC113, 118, 119, 120 IC314, 315, 500-503 IC508, 761, 1026 IC1036-1041

Video Process Control

VPR-1 BOARD (5/7)

BOARD NO. 1-648-532-15, 16, 17
BOARD'S LOT NO. 503-908
DVW-A500 (J, UC) : VPR-1A MCB
DVW-500 (J, UC) : VPR-1 MCB

DVW-VPR1-NTSC-REC-S/M-04-E

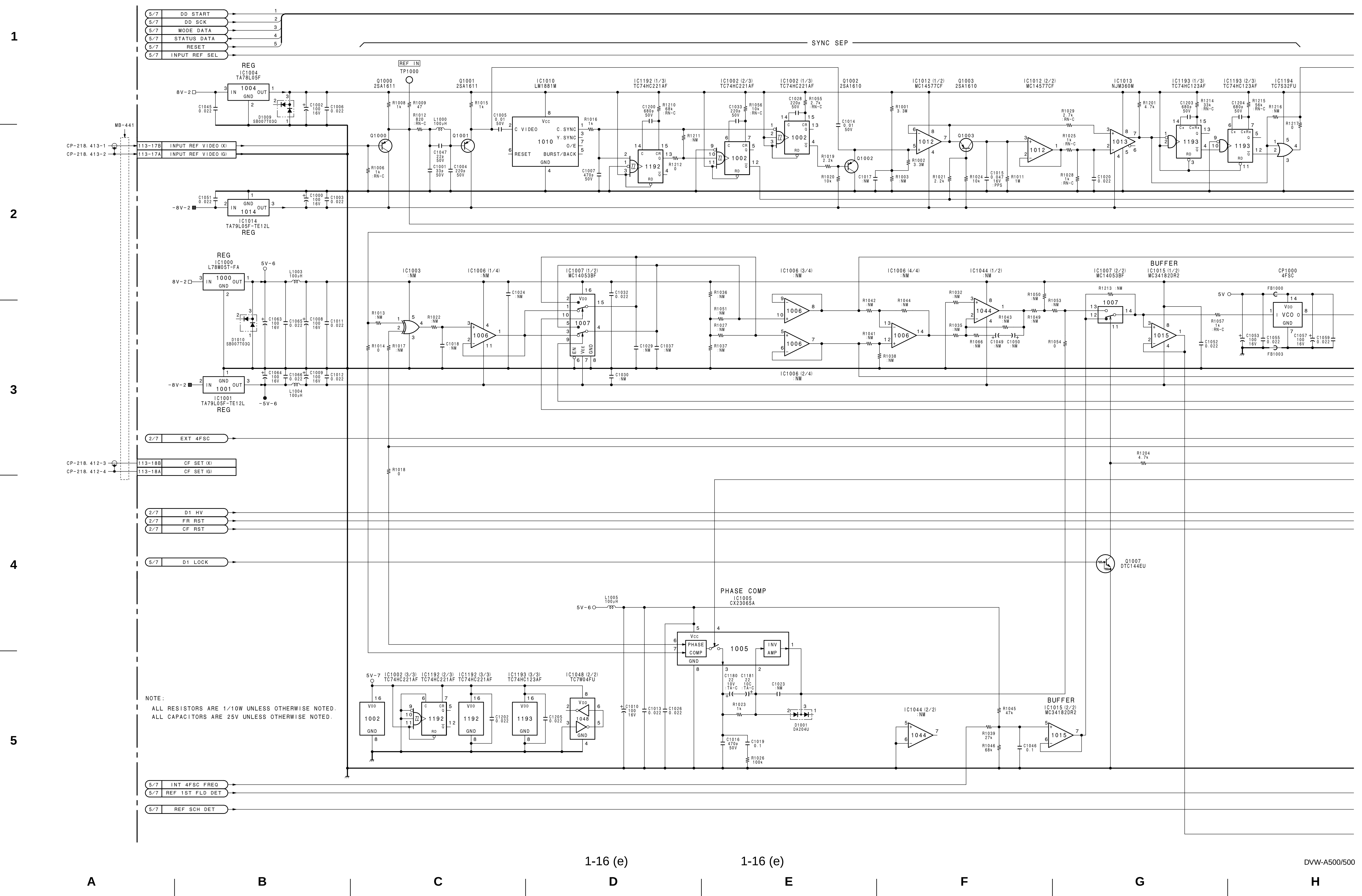

NOTE:
ALL RESISTORS ARE 1/10W UNLESS OTHERWISE NOTED.
ALL CAPACITORS ARE 25V UNLESS OTHERWISE NOTED.

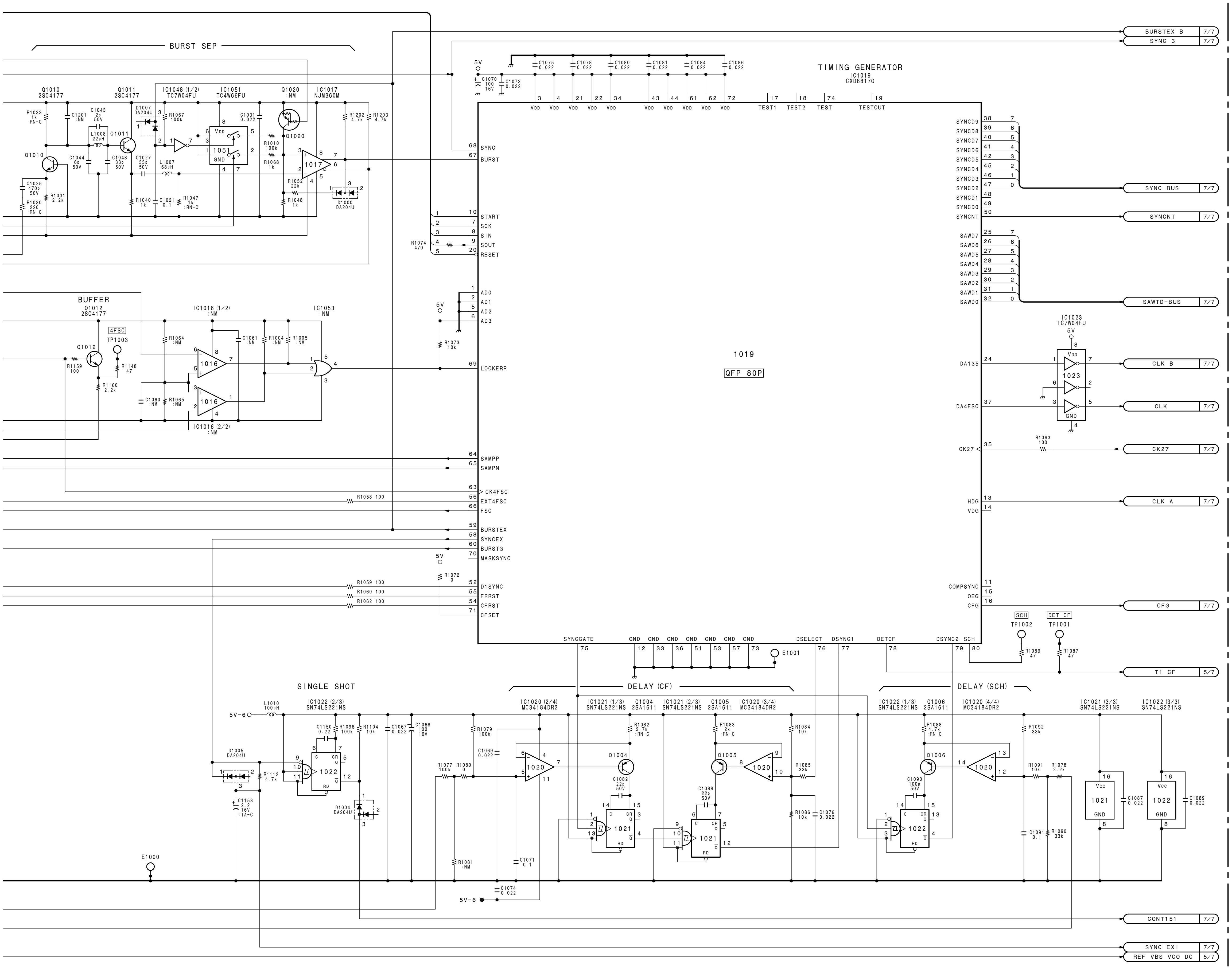

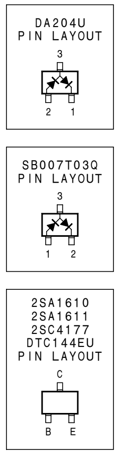

LOT NO.	BOARD NO.
503-704	1-648-532-15
705-802	1-648-532-16
803-908	1-648-532-17

Time Ref Signal (1)

VPR-1 BOARD (6/7)

BOARD NO. 1-648-532-15, 16, 17
BOARD'S LOT NO. 503-908
DVW-A500 (J, UC) : VPR-1A MCB
DVW-500 (J, UC) : VPR-1 MCB

DVW-VPR1-NTSC-REC-S/M-04-E

I J K L M N O P

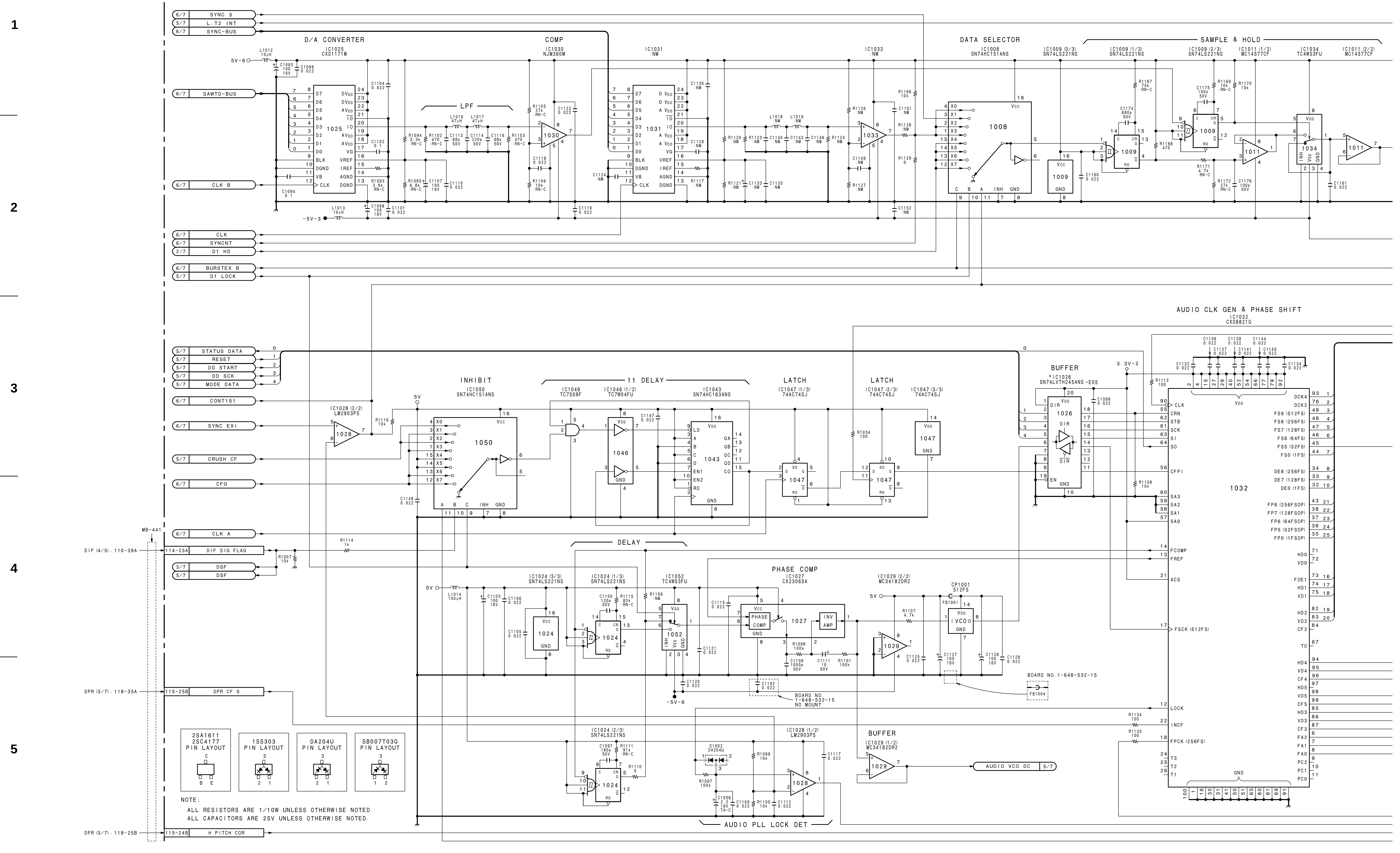
D/A CONVERTER
IC1025
CXD1171M
COMP
IC1030
NJM360M
IC1031
:NM
LPF
IC1033
:NM
DATA SELECTOR
IC1008
SN74HC151ANS
IC1009 (3/3)
SN74LS221NS
IC1009 (1/3)
SN74LS221NS
SAMPLE & HOLD
IC1009 (2/3)
SN74LS221NS
IC1011 (1/2)
MC14577CF
IC1034
TC4W53FU
IC1011 (2/2)
MC14577CF
SYNC 3
L:T2 INT
SYNC-BUS
SAWTD-BUS
CLK B
CLK
SYNCNT
D1 HD
BURSTEX B
D1 LOCK
AUDIO CLK GEN & PHASE SHIFT
IC1032
CXD8821Q
STATUS DATA
RESET
DD START
DD SCK
MODE DATA
CONT151
SYNC EXI
CRUSH CF
CFG
INHIBIT
IC1050
SN74HC151ANS
IC1028 (2/2)
LM2903PS
11 DELAY
IC1049
TC7S08F
IC1046 (1/2)
TC7W04FU
IC1043
SN74HC163ANS
LATCH
IC1047 (1/3)
74AC74SJ
LATCH
IC1047 (2/3)
74AC74SJ
IC1047 (3/3)
74AC74SJ
BUFFER
*IC1026
SN74LVTH245ANS-E05
CLK A
DIF SIG FLAG
DSF
DSF
DELAY
IC1024 (3/3)
SN74LS221NS
IC1024 (1/3)
SN74LS221NS
IC1052
TC4W53FU
PHASE COMP
IC1027
CX23065A
IC1029 (2/2)
MC34182DR2
CP1001
512FS
BOARD NO. 1-648-532-15
BOARD NO. 1-648-532-15 NO MOUNT
DPR CF 0
IC1024 (2/3)
SN74LS221NS
IC1028 (1/2)
LM2903PS
BUFFER
IC1029 (1/2)
MC34182DR2
AUDIO VCO DC
AUDIO PLL LOCK DET
H PITCH COR
2SA1611 2SC4177 PIN LAYOUT
1SS303 PIN LAYOUT
DA204U PIN LAYOUT
SB007T03Q PIN LAYOUT
NOTE:
ALL RESISTORS ARE 1/10W UNLESS OTHERWISE NOTED.
ALL CAPACITORS ARE 25V UNLESS OTHERWISE NOTED.
DIF (4/5). 110-39A
DPR (3/7). 118-35A
DPR (3/7). 118-25B
MB-441

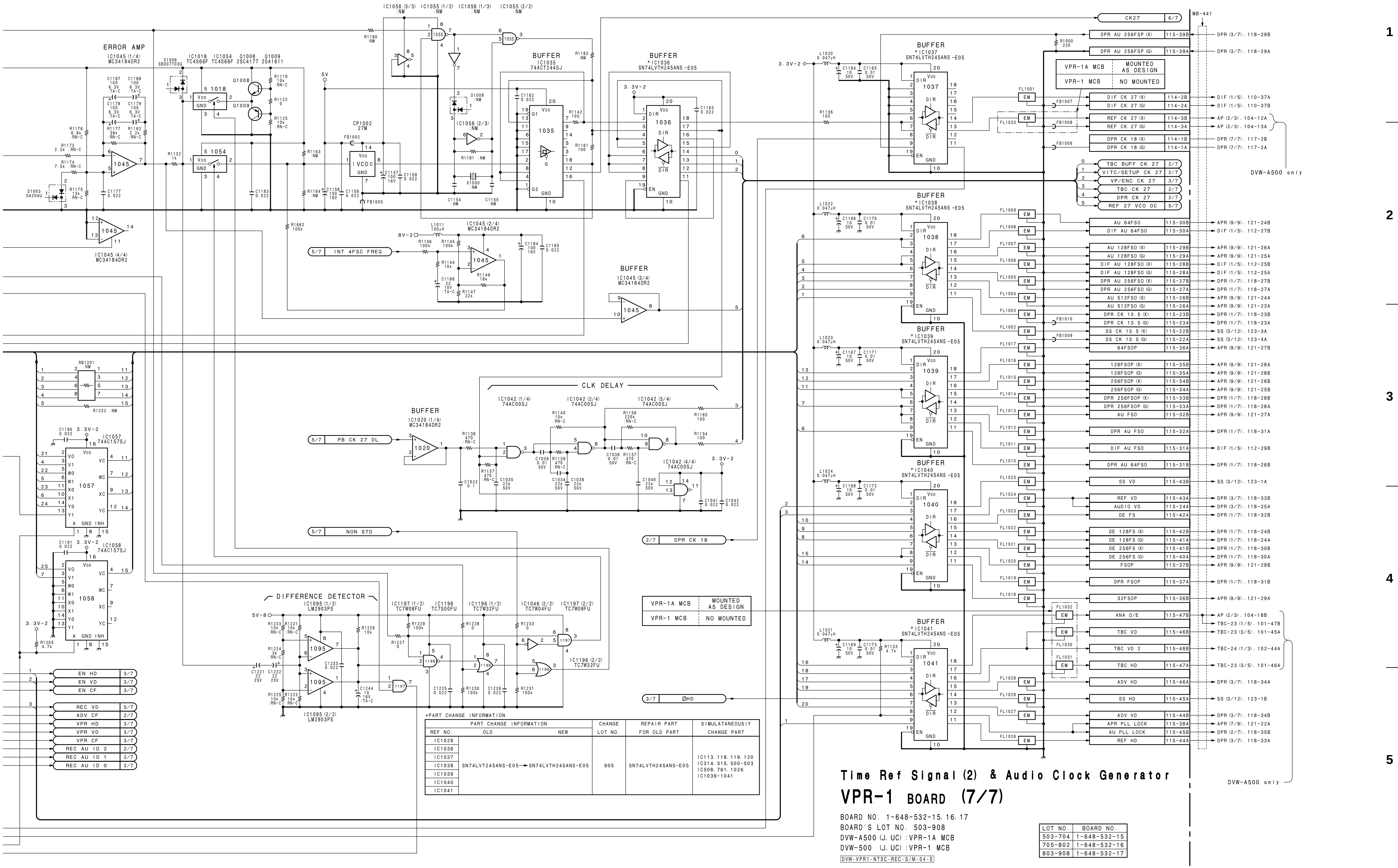

*PART CHANGE INFORMATION

PART CHANGE INFORMATION			CHANGE	REPAIR PART	SIMULATANEOUSIY
REF NO.	OLD	NEW	LOT NO.	FOR OLD PART	CHANGE PART
IC1026 IC1036 IC1037 IC1038 IC1039 IC1040 IC1041	SN74LVT245ANS-E05 →	SN74LVTH245ANS-E05	905	SN74LVTH245ANS-E05	IC113, 118, 119, 120 IC314, 315, 500-503 IC508, 761, 1026 IC1036-1041

Time Ref Signal (2) & Audio Clock Generator

VPR-1 BOARD (7/7)

BOARD NO. 1-648-532-15, 16, 17
BOARD'S LOT NO. 503-908
DVW-A500 (J, UC) : VPR-1A MCB
DVW-500 (J, UC) : VPR-1 MCB

LOT NO.	BOARD NO.
503-704	1-648-532-15
705-802	1-648-532-16
803-908	1-648-532-17

DVW-VPR1-NTSC-REC-S/M-04-E

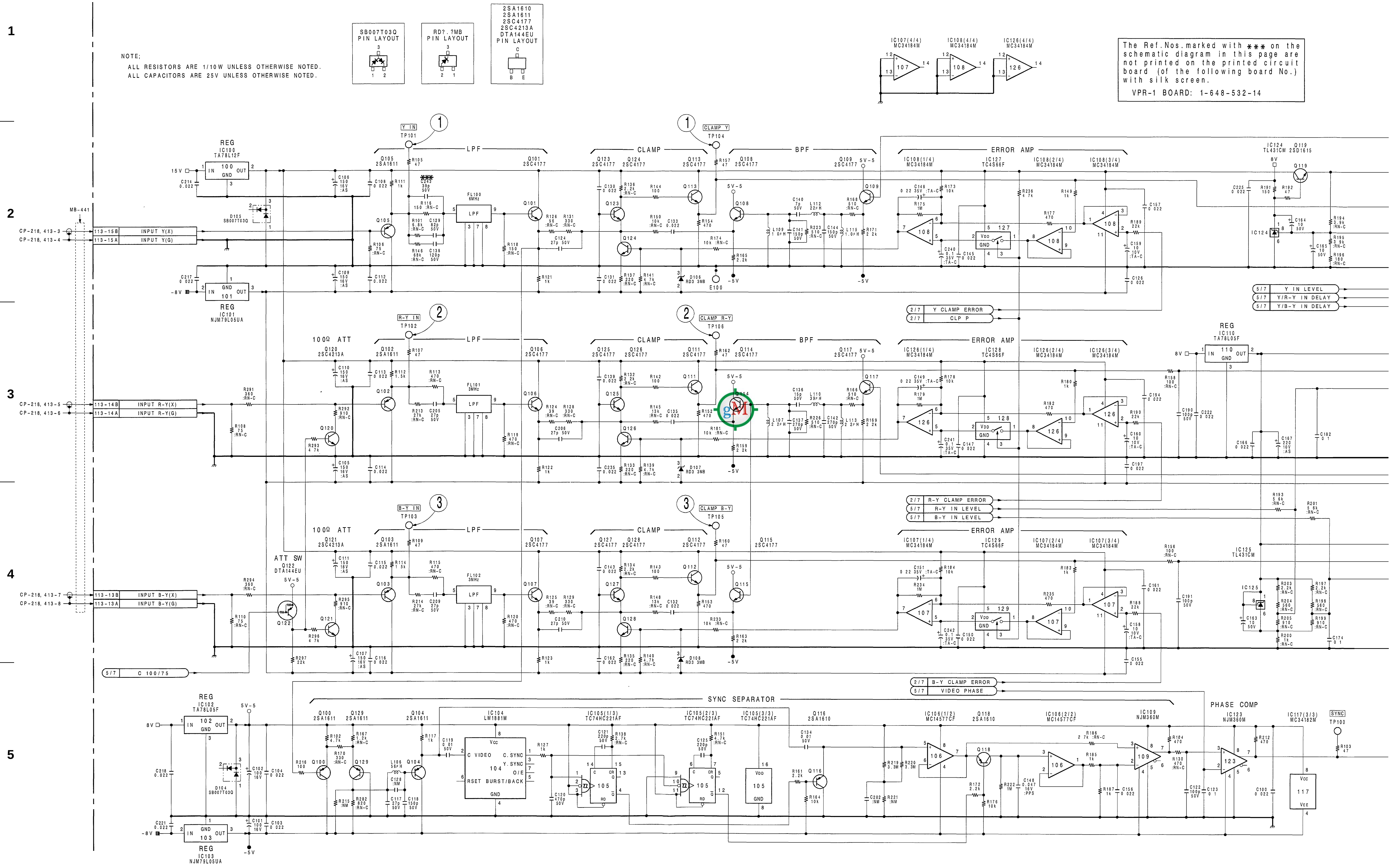
NOTE;
ALL RESISTORS ARE 1/10W UNLESS OTHERWISE NOTED.
ALL CAPACITORS ARE 25V UNLESS OTHERWISE NOTED.
SB007T03Q PIN LAYOUT
RD?.?MB PIN LAYOUT
2SA1610 2SA1611 2SC4177 2SC4213A DTA144EU PIN LAYOUT
The Ref.Nos.marked with *** on the schematic diagram in this page are not printed on the printed circuit board (of the following board No.) with silk screen.
VPR-1 BOARD: 1-648-532-14
LPF
CLAMP
BPF
ERROR AMP
100Ω ATT
ATT SW
SYNC SEPARATOR
PHASE COMP
INPUT Y(X)
INPUT Y(G)
INPUT R-Y(X)
INPUT R-Y(G)
INPUT B-Y(X)
INPUT B-Y(G)
Y CLAMP ERROR
CLP P
Y IN LEVEL
Y/R-Y IN DELAY
Y/B-Y IN DELAY
R-Y CLAMP ERROR
R-Y IN LEVEL
B-Y IN LEVEL
B-Y CLAMP ERROR
VIDEO PHASE
C 100/75

VPR-1 (1/7)

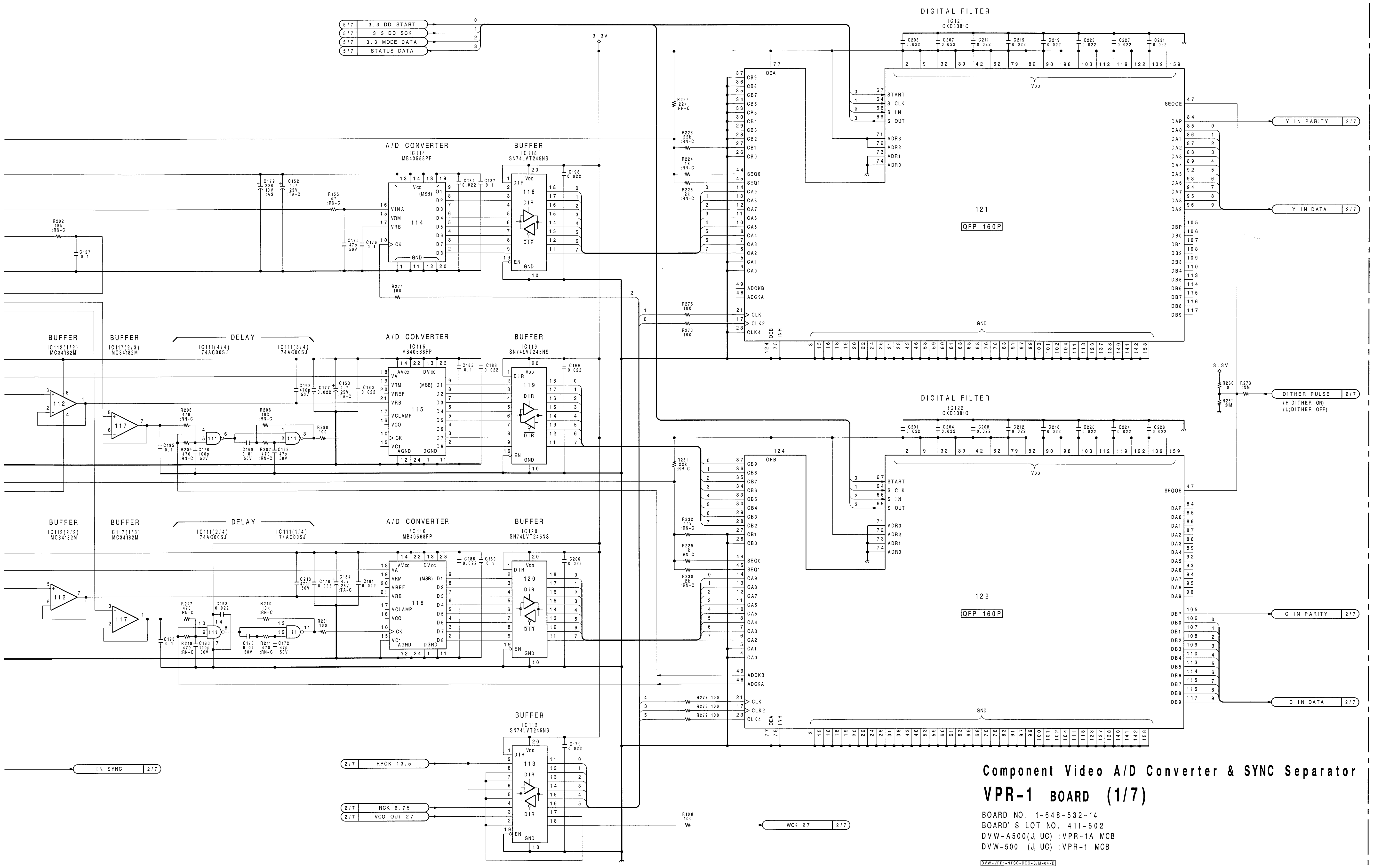

Component Video A/D Converter & SYNC Separator

VPR-1 BOARD (1/7)

BOARD NO. 1-648-532-14
BOARD' S LOT NO. 411-502
DVW-A500(J, UC) :VPR-1A MCB
DVW-500 (J, UC) :VPR-1 MCB

DVW-VPR1-NTSC-REC-S/M-04-D

1-7 (d)

I J K L M N O P

 VPR-1 (2/7)

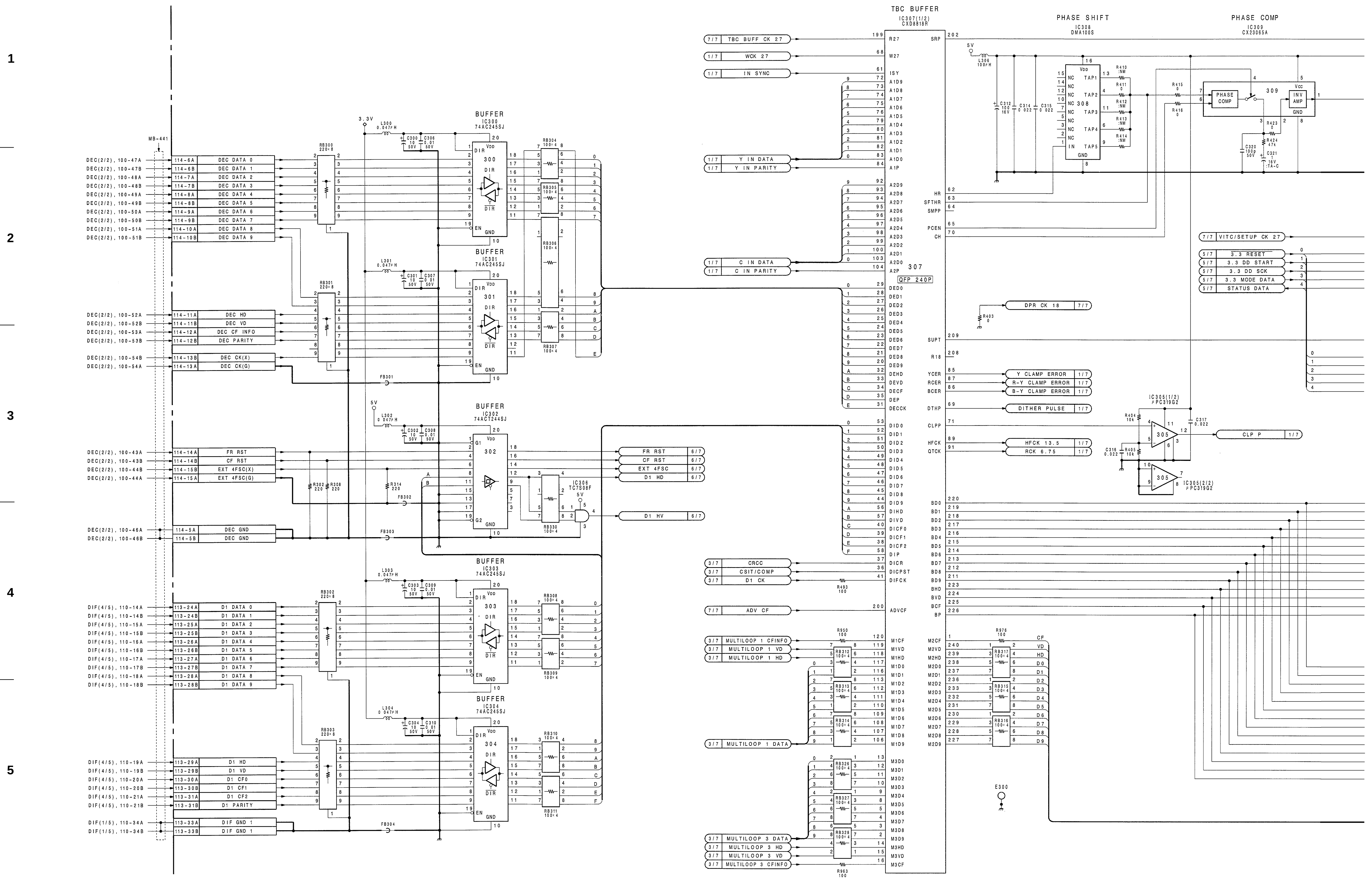

MB-441
BUFFER
IC300
74AC245SJ
BUFFER
IC301
74AC245SJ
BUFFER
IC302
74ACT244SJ
BUFFER
IC303
74AC245SJ
BUFFER
IC304
74AC245SJ
IC306
TC7S08F
TBC BUFFER
IC307(1/2)
CXD8818R
QFP 240P
PHASE SHIFT
IC308
DMA100S
PHASE COMP
IC309
CX23065A
IC305(1/2)
μPC319G2
IC305(2/2)
μPC319G2
DEC DATA 0
DEC DATA 1
DEC DATA 2
DEC DATA 3
DEC DATA 4
DEC DATA 5
DEC DATA 6
DEC DATA 7
DEC DATA 8
DEC DATA 9
DEC HD
DEC VD
DEC CF INFO
DEC PARITY
DEC CK(X)
DEC CK(G)
FR RST
CF RST
EXT 4FSC(X)
EXT 4FSC(G)
DEC GND
D1 DATA 0
D1 DATA 1
D1 DATA 2
D1 DATA 3
D1 DATA 4
D1 DATA 5
D1 DATA 6
D1 DATA 7
D1 DATA 8
D1 DATA 9
D1 HD
D1 VD
D1 CF0
D1 CF1
D1 CF2
D1 PARITY
DIF GND 1
EXT 4FSC
D1 HD
D1 HV
TBC BUFF CK 27
WCK 27
IN SYNC
Y IN DATA
Y IN PARITY
C IN DATA
C IN PARITY
CRCC
CSIT/COMP
D1 CK
ADV CF
MULTILOOP 1 CFINFO
MULTILOOP 1 VD
MULTILOOP 1 HD
MULTILOOP 1 DATA
MULTILOOP 3 DATA
MULTILOOP 3 HD
MULTILOOP 3 VD
MULTILOOP 3 CFINFO
DPR CK 18
Y CLAMP ERROR
R-Y CLAMP ERROR
B-Y CLAMP ERROR
DITHER PULSE
HFCK 13.5
RCK 6.75
CLP P
VITC/SETUP CK 27
3.3 RESET
3.3 DD START
3.3 DD SCK
3.3 MODE DATA
STATUS DATA
E300

 1-8 (d)

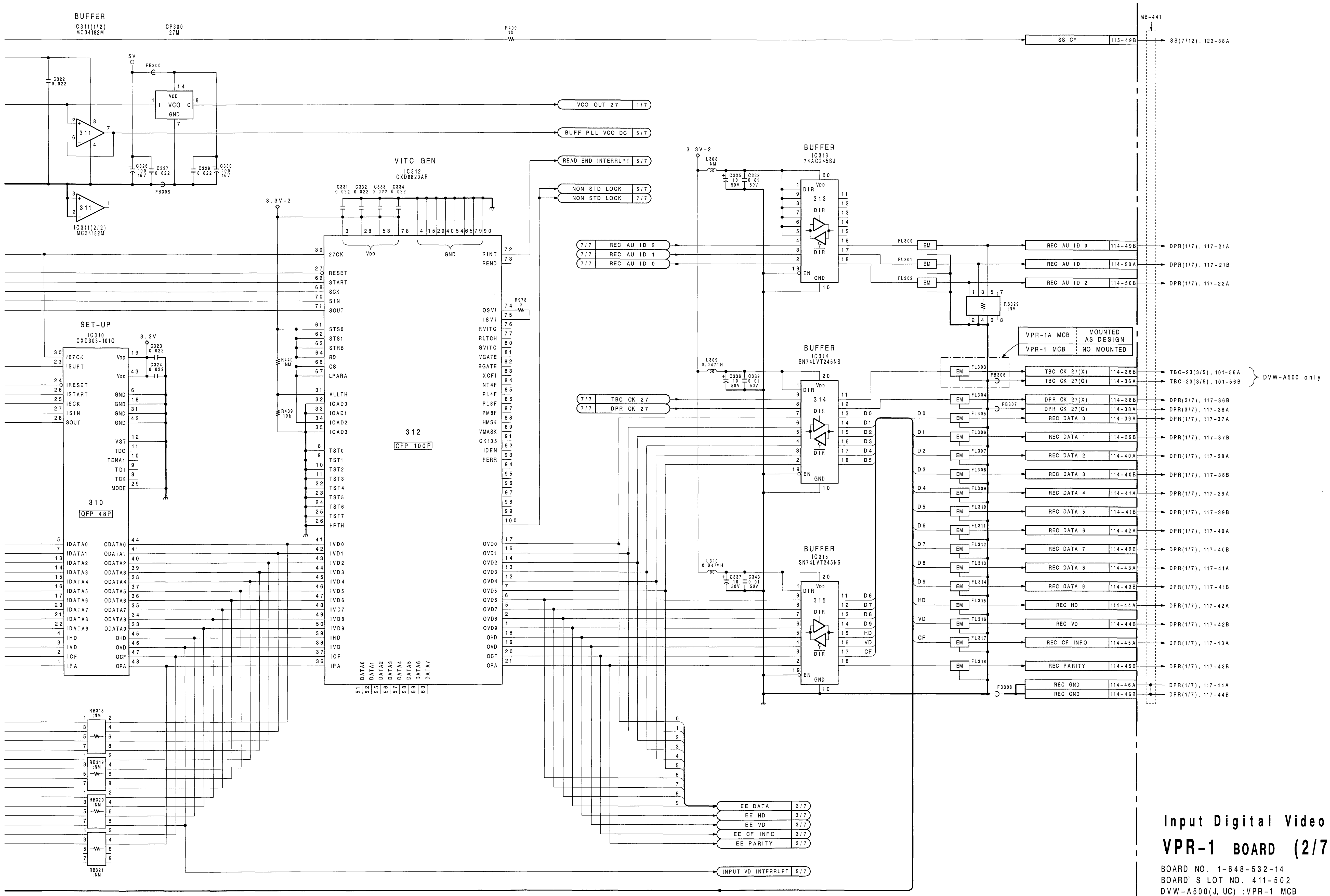

Input Digital Video Data Processor

VPR-1 BOARD (2/7)

BOARD NO. 1-648-532-14
BOARD' S LOT NO. 411-502
DVW-A500(J, UC) :VPR-1 MCB
DVW-500 (J, UC) :VPR-1 MCB

DVW-VPR1-NTSC-REC-S/M-04-D

NOTE;
ALL RESISTORS ARE 1/10W UNLESS OTHERWISE NOTED.
ALL CAPACITORS ARE 25V UNLESS OTHERWISE NOTED.

1 2 3 4 5

I J K L M N O P

VPR-1 (3/7)

1
2
3
4
5

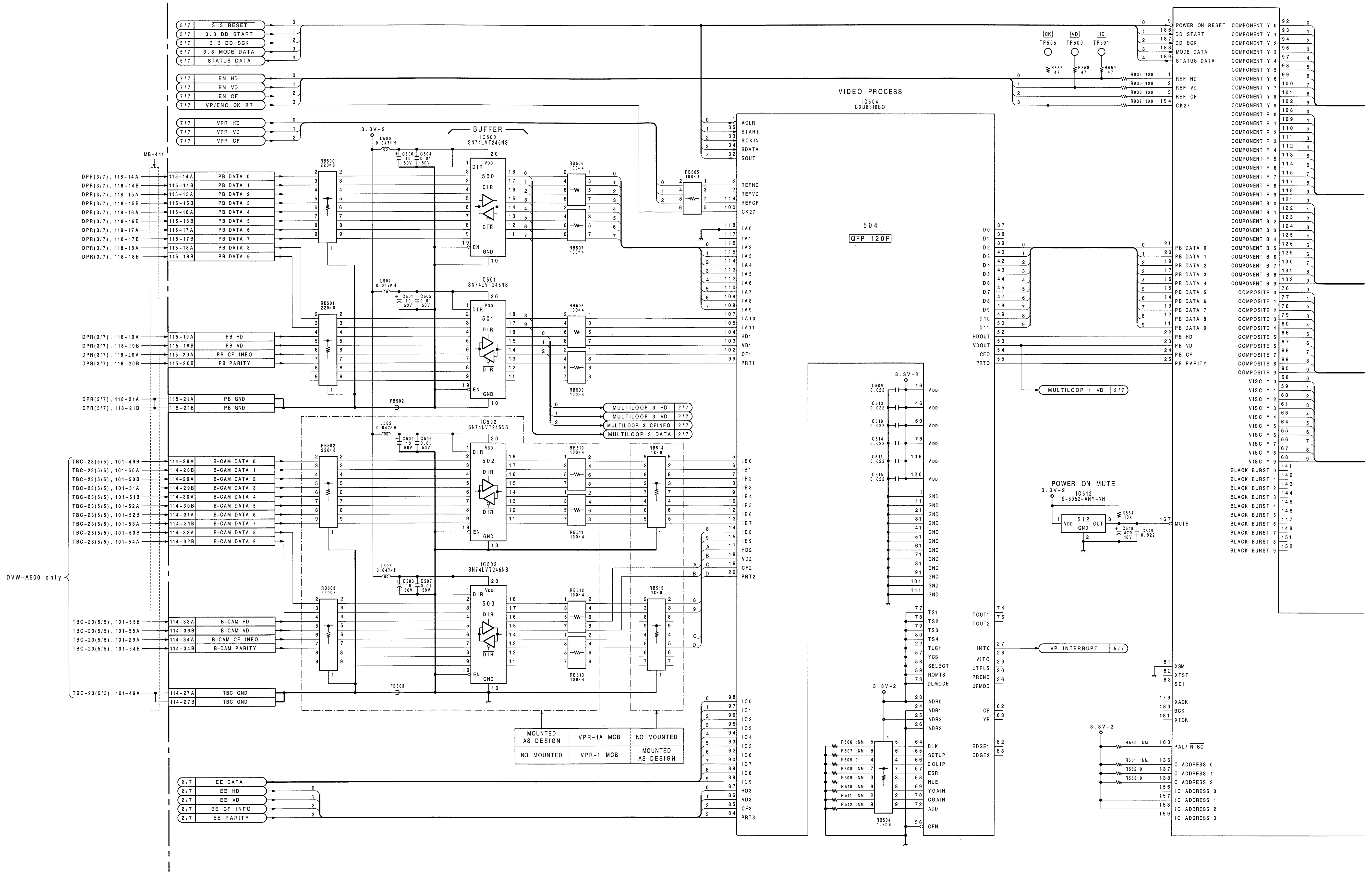

1-10 (d)

A B C D E F G H

http://getMANUAL.com

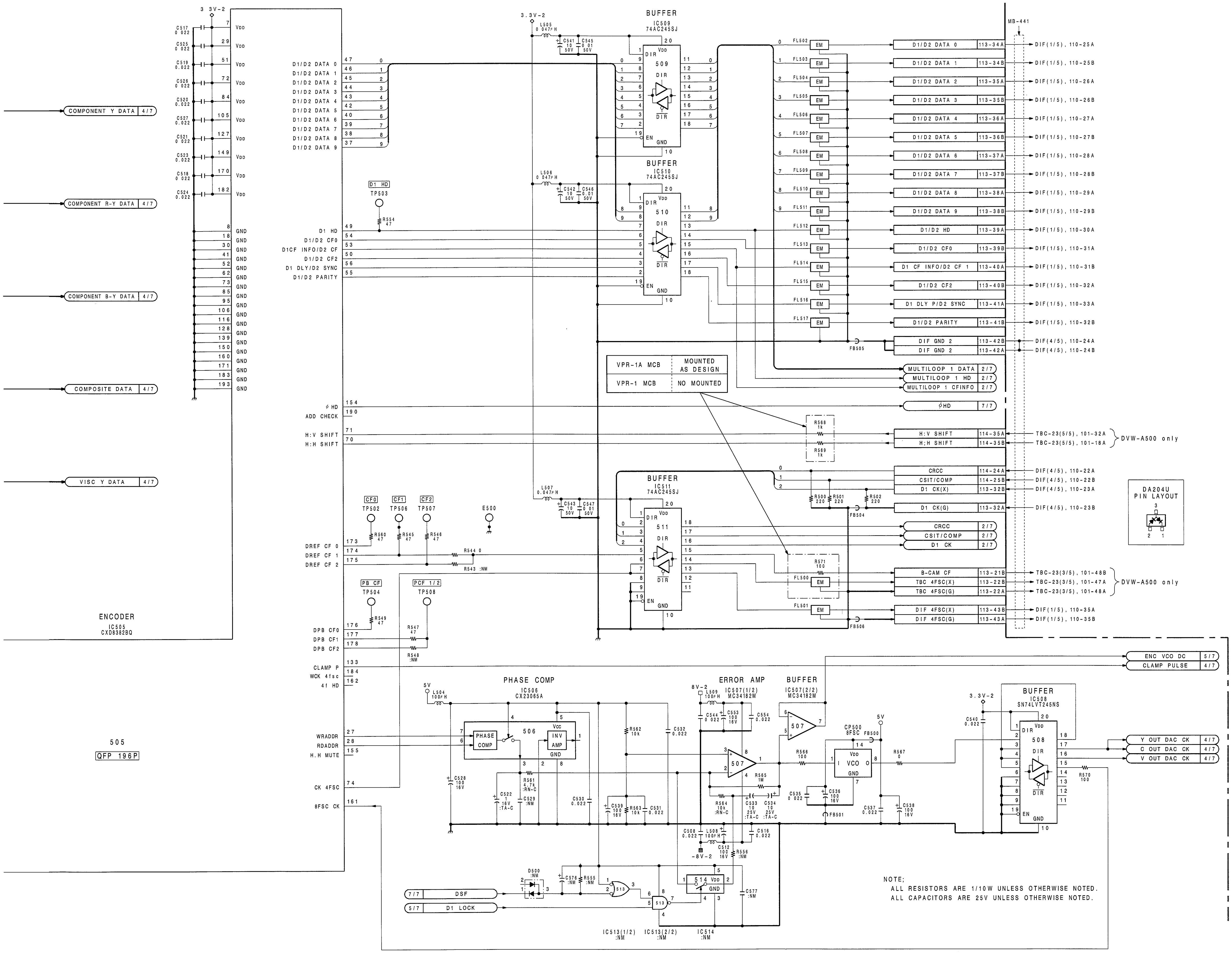

NOTE;
ALL RESISTORS ARE 1/10W UNLESS OTHERWISE NOTED.
ALL CAPACITORS ARE 25V UNLESS OTHERWISE NOTED.

Digital Video Data Encoder
VPR-1 BOARD (3/7)

BOARD NO. 1-648-532-14
BOARD' S LOT NO. 411-502
DVW-A500(J, UC) :VPR-1A MCB
DVW-500 (J, UC) :VPR-1 MCB
DVW-VPR1-NTSC-REC-S/M-04-D

1 2 3 4 5

 VPR-1 (4/7)

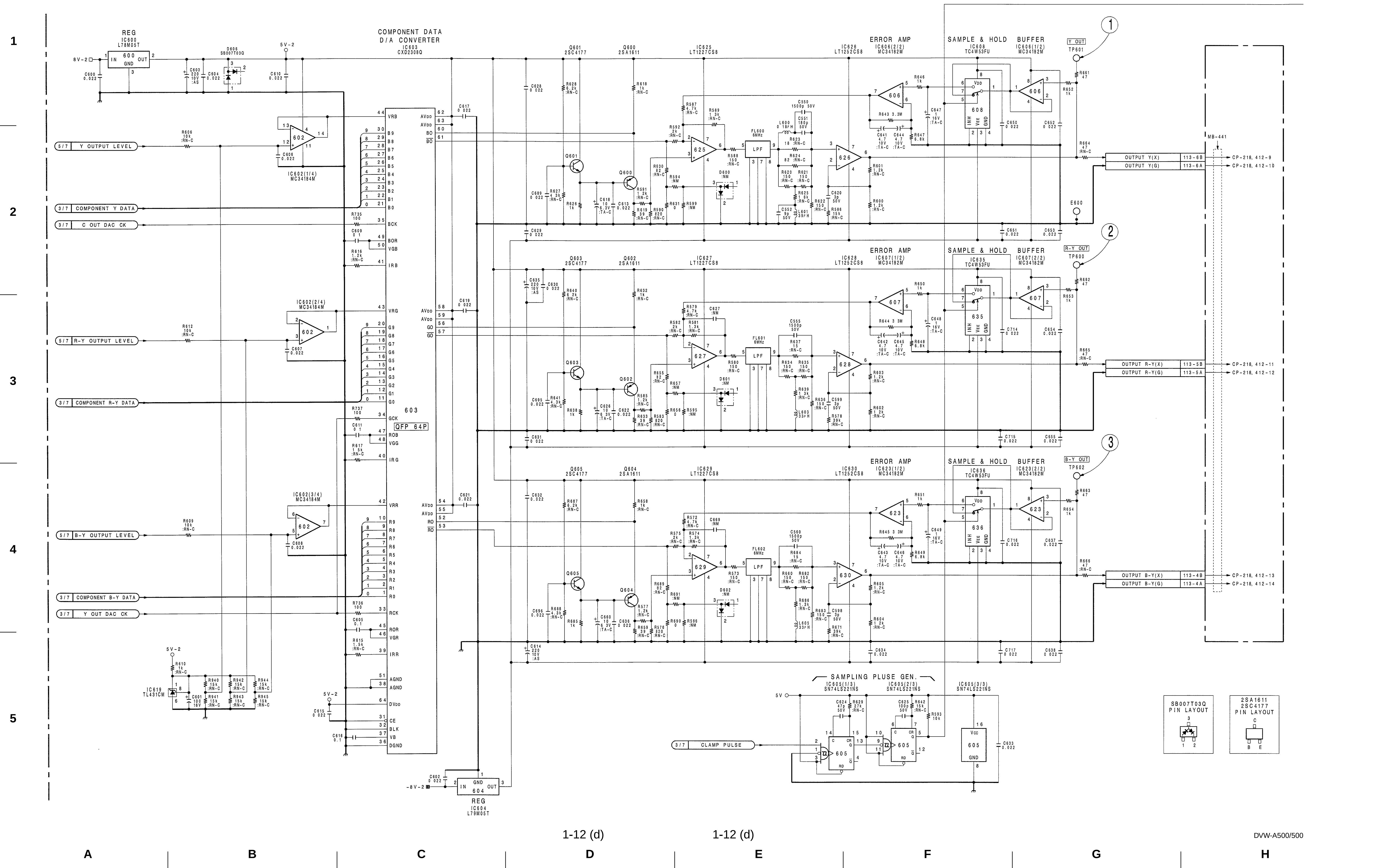

 1-12 (d)

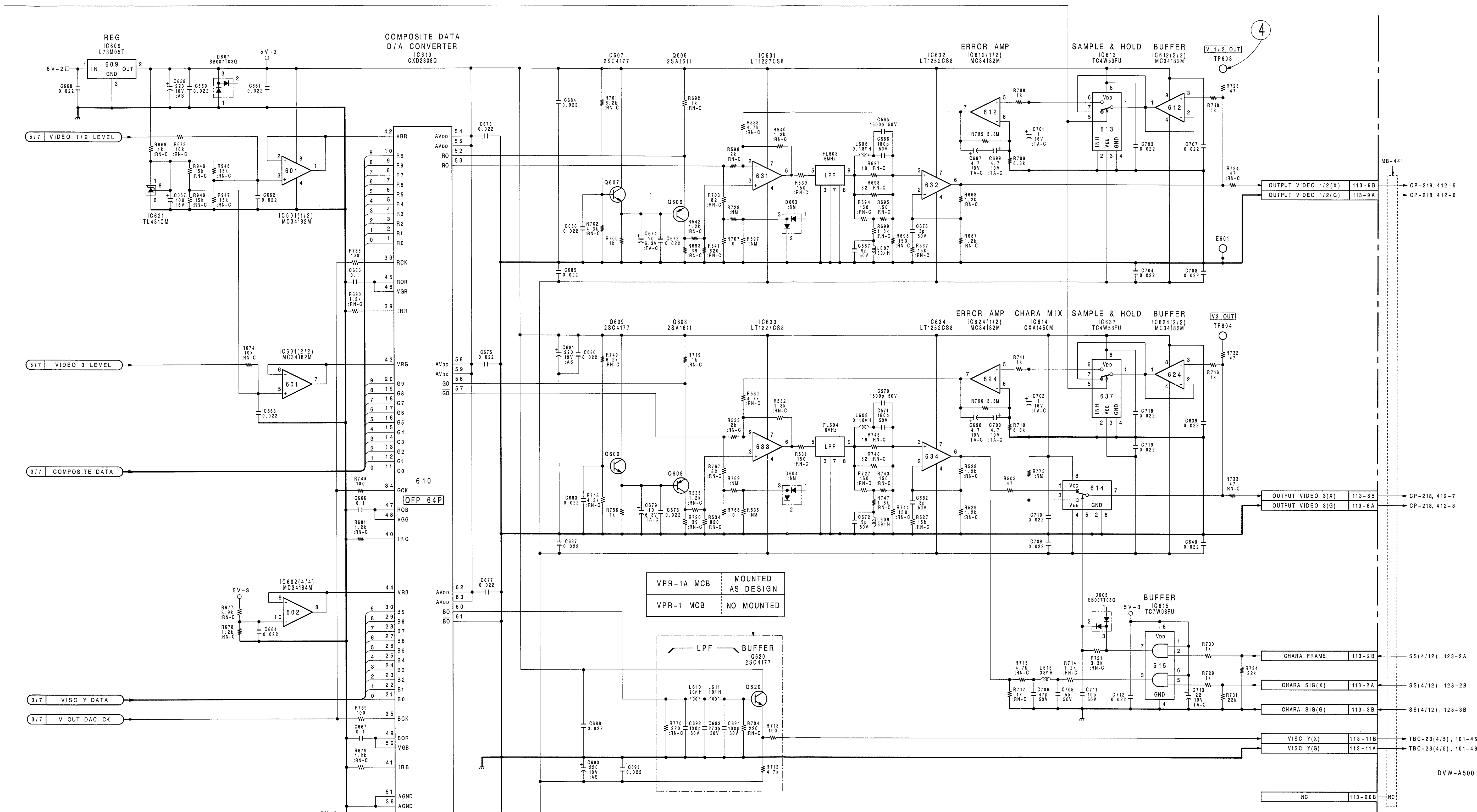

Output Video Signal D/A Converter

VPR-1 BOARD (4/7)

BOARD NO. 1-648-532-14
BOARD'S LOT NO. 411-502
DVW-A500(J, UC) :VPR-1A MCB
DVW-500 (J, UC) :VPR-1 MCB

DVW-VPR1-NTSC-REC-S/M-04-D

NOTE;
ALL RESISTORS ARE 1/10W UNLESS OTHERWISE NOTED.
ALL CAPACITORS ARE 25V UNLESS OTHERWISE NOTED.

VPR-1 (5/7)

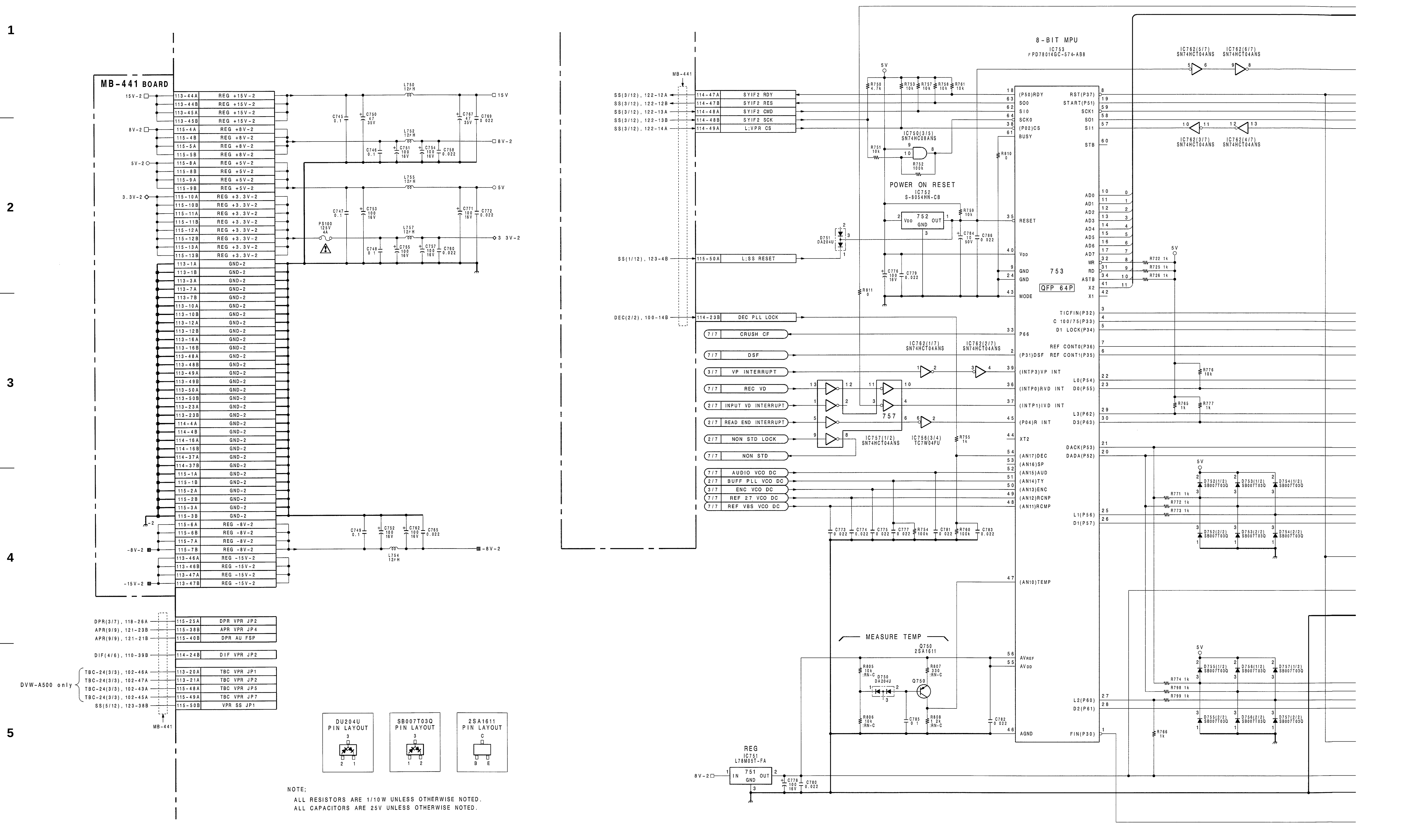
MB-441 BOARD
8-BIT MPU
IC753
μPD78014GC-574-AB8
753
QFP 64P
POWER ON RESET
IC752
S-8054HN-CB
752
IC750(3/5)
SN74HC08ANS
IC762(5/7)
SN74HCT04ANS
IC762(6/7)
SN74HCT04ANS
IC762(3/7)
SN74HCT04ANS
IC762(4/7)
SN74HCT04ANS
IC762(1/7)
SN74HCT04ANS
IC762(2/7)
SN74HCT04ANS
IC757(1/2)
SN74HCT04ANS
IC756(3/4)
TC7W04FU
757
MEASURE TEMP
Q750
2SA1611
REG
IC751
L78M05T-FA
751
DU204U
PIN LAYOUT
SB007T03Q
PIN LAYOUT
2SA1611
PIN LAYOUT
SYIF2 RDY
SYIF2 RES
SYIF2 CMD
SYIF2 SCK
L;VPR CS
L;SS RESET
DEC PLL LOCK
CRUSH CF
DSF
VP INTERRUPT
REC VD
INPUT VD INTERRUPT
READ END INTERRUPT
NON STD LOCK
NON STD
AUDIO VCO DC
BUFF PLL VCO DC
ENC VCO DC
REF 27 VCO DC
REF VBS VCO DC
DPR VPR JP2
APR VPR JP4
DPR AU FSP
DIF VPR JP2
TBC VPR JP1
TBC VPR JP2
TBC VPR JP5
TBC VPR JP7
VPR SS JP1
DVW-A500 only
NOTE;
ALL RESISTORS ARE 1/10W UNLESS OTHERWISE NOTED.
ALL CAPACITORS ARE 25V UNLESS OTHERWISE NOTED.

1-14 (d)

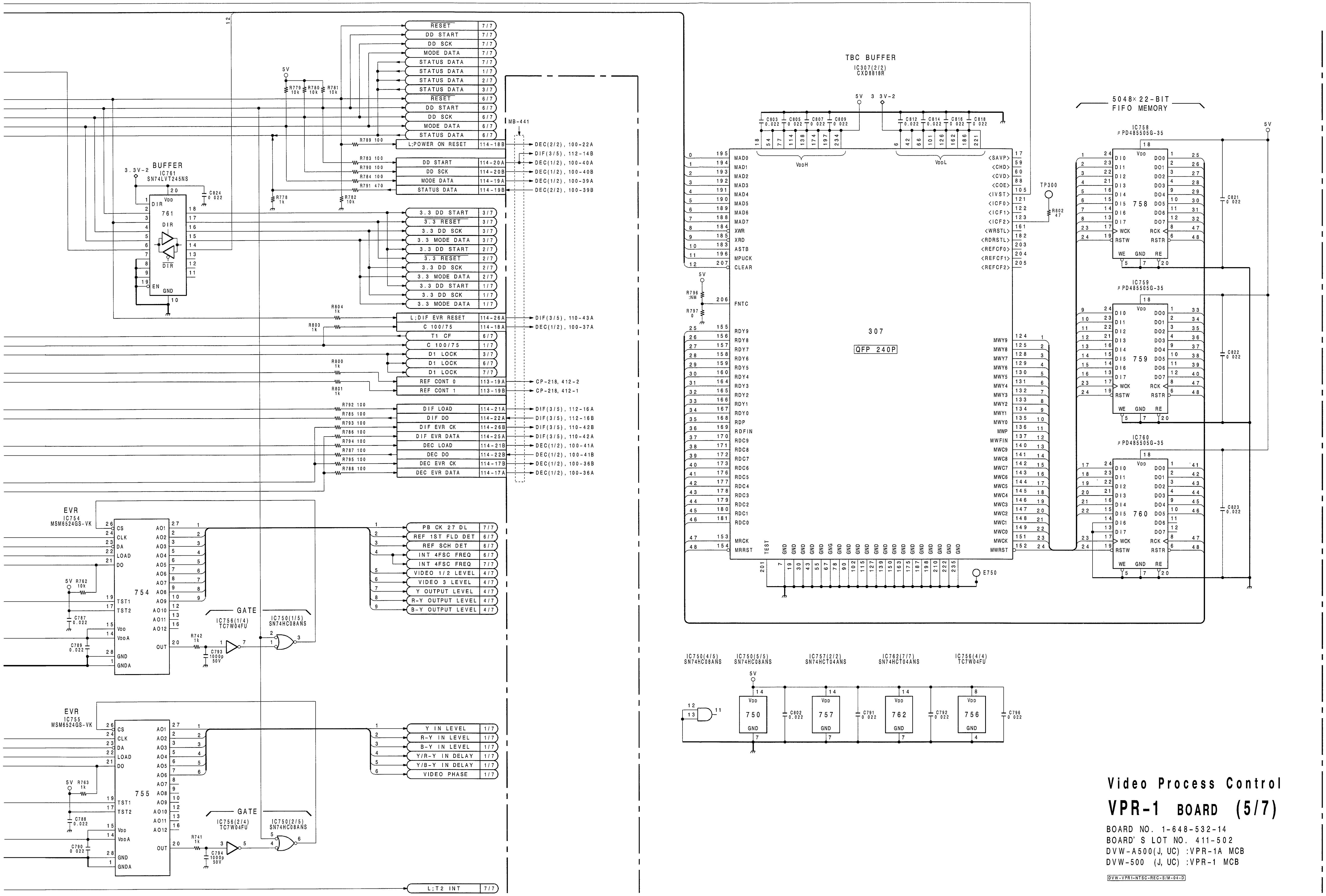
BUFFER
IC761
SN74LVT245NS
3.3V-2
EVR
IC754
MSM6524GS-VK
EVR
IC755
MSM6524GS-VK
GATE
IC756(1/4)
TC7W04FU
IC750(1/5)
SN74HC08ANS
GATE
IC756(2/4)
TC7W04FU
IC750(2/5)
SN74HC08ANS
RESET
DD START
DD SCK
MODE DATA
STATUS DATA
L;POWER ON RESET
3.3 DD START
3.3 RESET
3.3 DD SCK
3.3 MODE DATA
L;DIF EVR RESET
C 100/75
T1 CF
D1 LOCK
REF CONT 0
REF CONT 1
DIF LOAD
DIF DO
DIF EVR CK
DIF EVR DATA
DEC LOAD
DEC DO
DEC EVR CK
DEC EVR DATA
PB CK 27 DL
REF 1ST FLD DET
REF SCH DET
INT 4FSC FREQ
VIDEO 1/2 LEVEL
VIDEO 3 LEVEL
Y OUTPUT LEVEL
R-Y OUTPUT LEVEL
B-Y OUTPUT LEVEL
Y IN LEVEL
R-Y IN LEVEL
B-Y IN LEVEL
Y/R-Y IN DELAY
Y/B-Y IN DELAY
VIDEO PHASE
L;T2 INT
MB-441
TBC BUFFER
IC307(2/2)
CXD8818R
307
QFP 240P
TP300
E750
5048× 22-BIT
FIFO MEMORY
IC758
μPD485505G-35
IC759
μPD485505G-35
IC760
μPD485505G-35
IC750(4/5)
SN74HC08ANS
IC750(5/5)
SN74HC08ANS
IC757(2/2)
SN74HCT04ANS
IC762(7/7)
SN74HCT04ANS
IC756(4/4)
TC7W04FU
Video Process Control
VPR-1 BOARD (5/7)
BOARD NO. 1-648-532-14
BOARD' S LOT NO. 411-502
DVW-A500(J, UC) :VPR-1A MCB
DVW-500 (J, UC) :VPR-1 MCB
DVW-VPR1-NTSC-REC-S/M-04-D

1
2
3
4
5

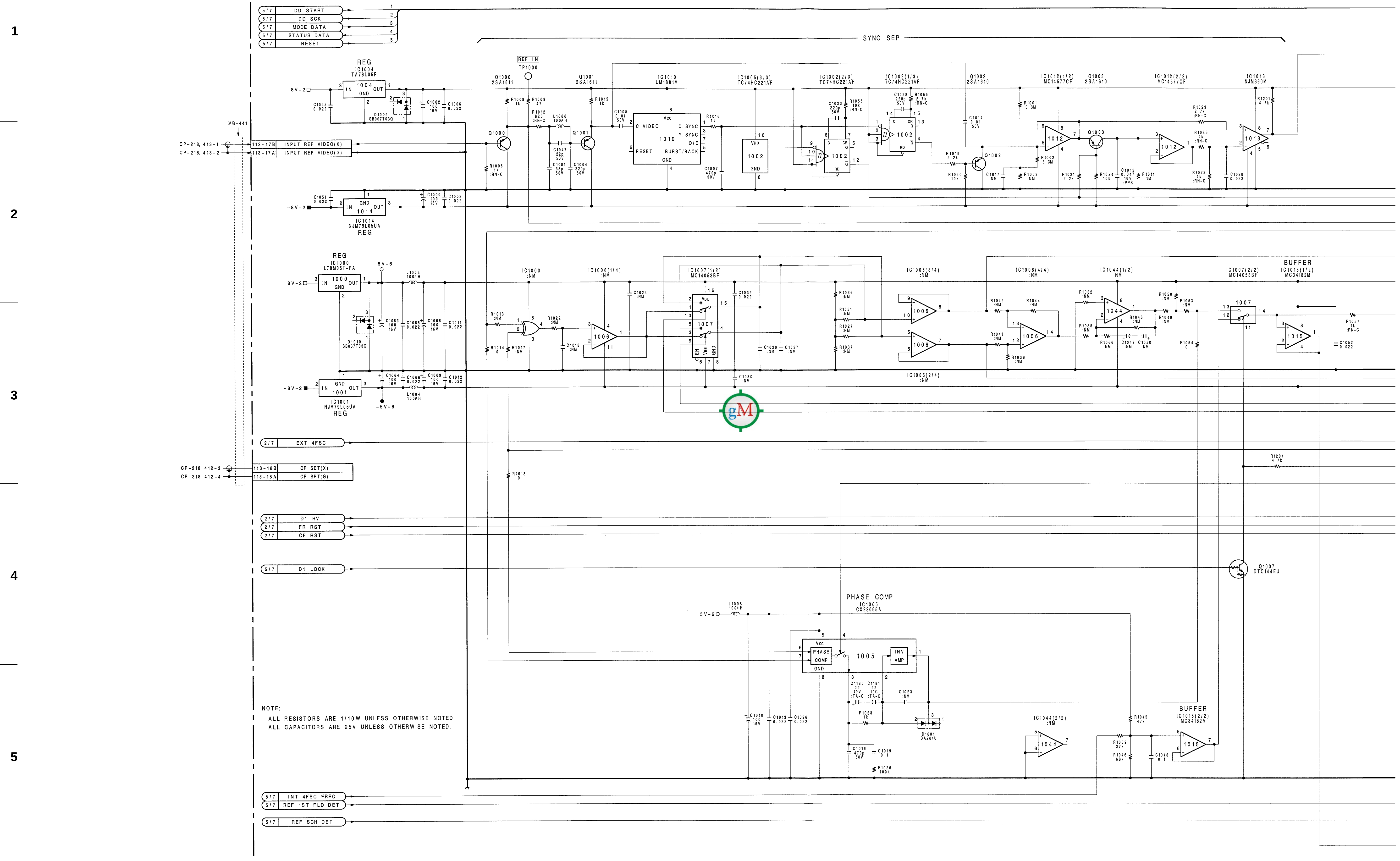

1
2
3
4
5
DD START
DD SCK
MODE DATA
STATUS DATA
RESET
SYNC SEP
REF IN
TP1000
REG
IC1004
TA78L05F
Q1000
2SA1611
Q1001
2SA1611
IC1010
LM1881M
C VIDEO
C. SYNC
Y. SYNC
O/E
RESET
BURST/BACK
IC1005(3/3)
TC74HC221AF
IC1002(2/3)
TC74HC221AF
IC1002(1/3)
TC74HC221AF
Q1002
2SA1610
IC1012(1/2)
MC14577CF
Q1003
2SA1610
IC1012(2/2)
MC14577CF
IC1013
NJM360M
MB-441
CP-218, 413-1
CP-218, 413-2
INPUT REF VIDEO(X)
INPUT REF VIDEO(G)
IC1014
NJM79L05UA
REG
IC1000
L78M05T-FA
IC1003
:NM
IC1006(1/4)
:NM
IC1007(1/2)
MC14053BF
IC1006(3/4)
:NM
IC1006(4/4)
:NM
IC1044(1/2)
:NM
IC1007(2/2)
MC14053BF
BUFFER
IC1015(1/2)
MC34182M
IC1001
NJM79L05UA
REG
IC1006(2/4)
:NM
EXT 4FSC
CP-218, 412-3
CP-218, 412-4
CF SET(X)
CF SET(G)
D1 HV
FR RST
CF RST
D1 LOCK
Q1007
DTC144EU
PHASE COMP
IC1005
CX23065A
PHASE COMP
INV AMP
D1001
DA204U
IC1044(2/2)
:NM
BUFFER
IC1015(2/2)
MC34182M
NOTE;
ALL RESISTORS ARE 1/10W UNLESS OTHERWISE NOTED.
ALL CAPACITORS ARE 25V UNLESS OTHERWISE NOTED.
INT 4FSC FREQ
REF 1ST FLD DET
REF SCH DET

A B C D E F G H

 VPR-1 (6/7)

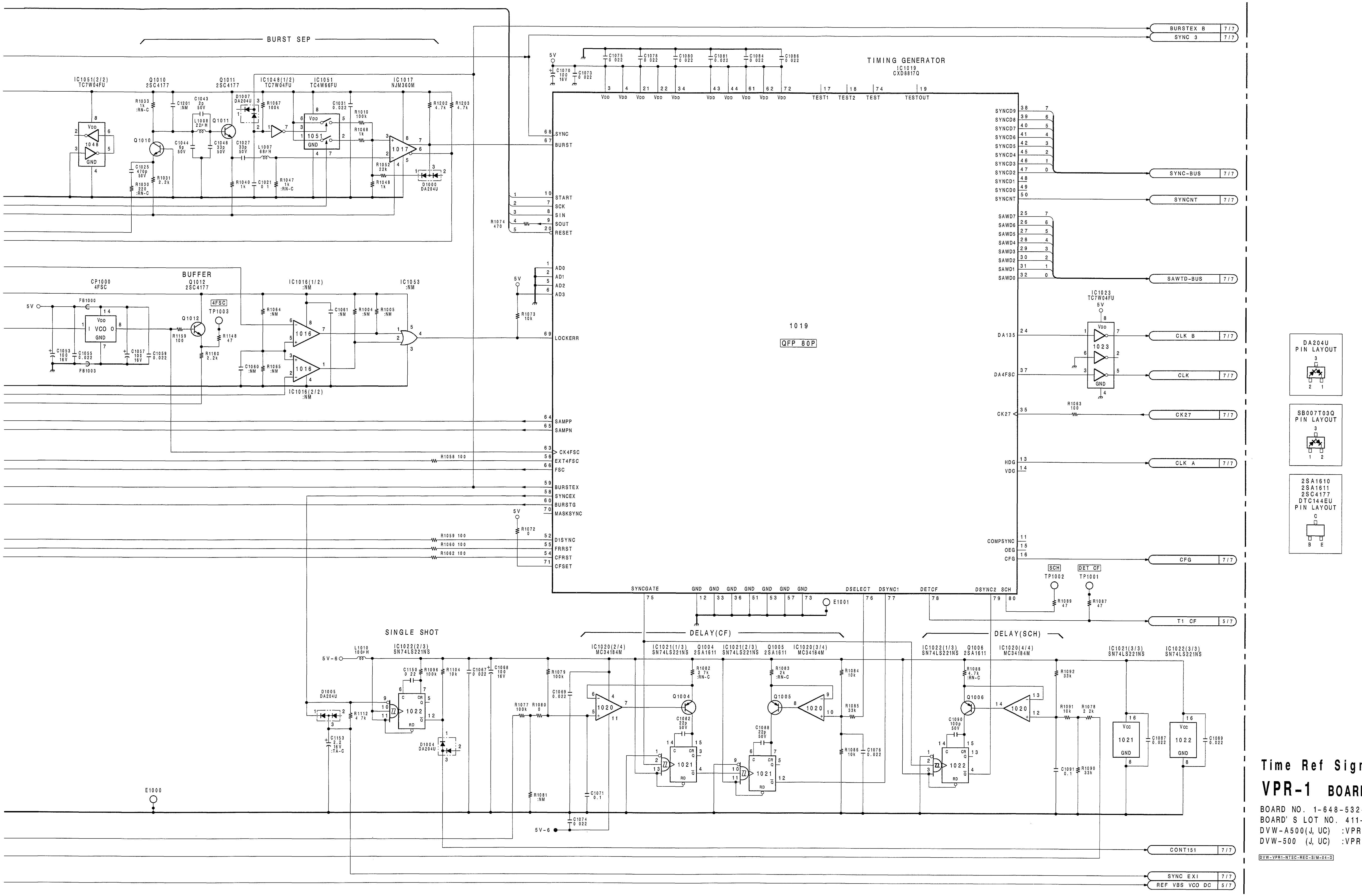

Time Ref Signal(1)

VPR-1 BOARD (6/7)

BOARD NO. 1-648-532-14
BOARD' S LOT NO. 411-502
DVW-A500(J, UC) :VPR-1A MCB
DVW-500 (J, UC) :VPR-1 MCB

DVW-VPR1-NTSC-REC-S/M-24-D

VPR-1 (7/7)

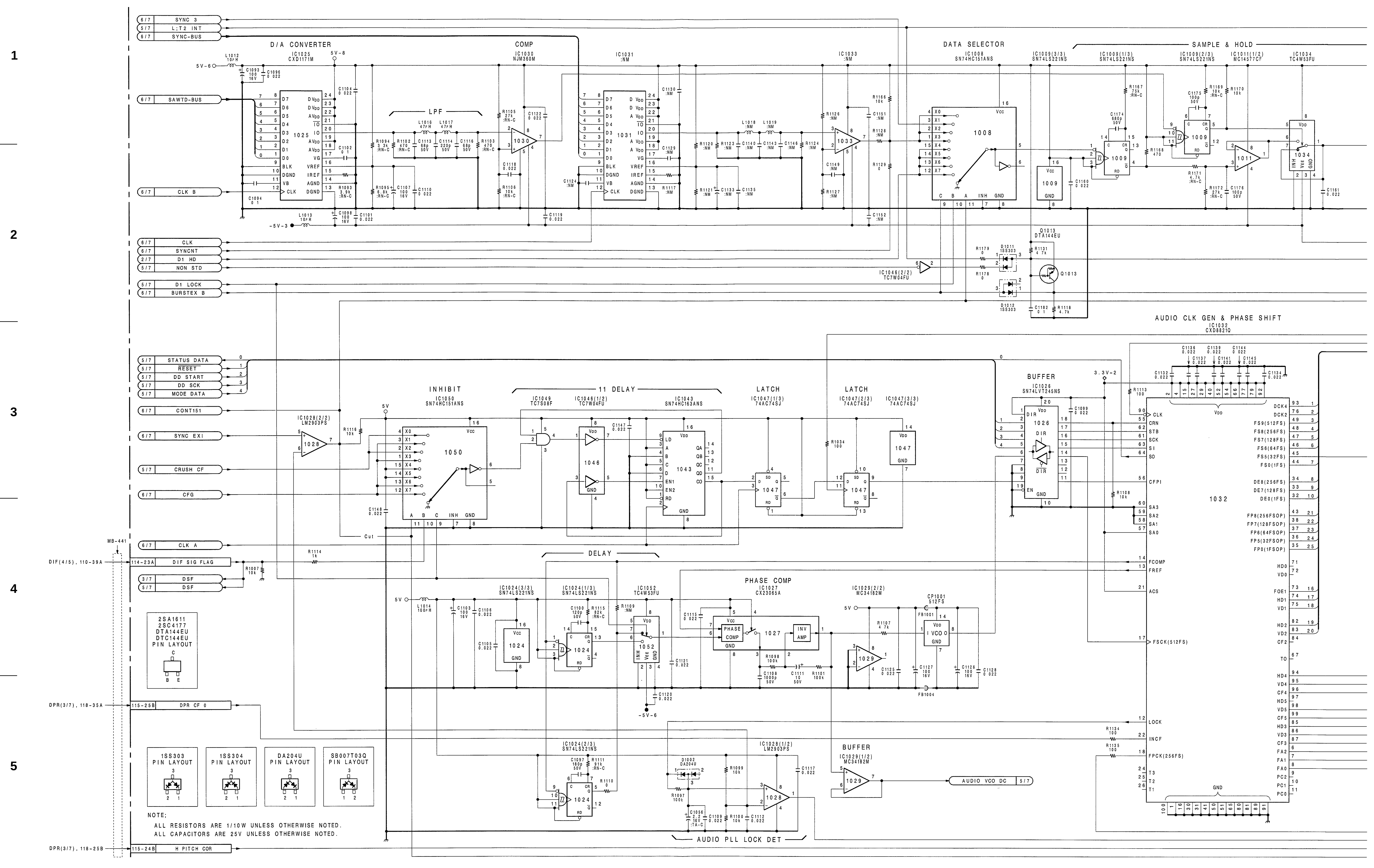
D/A CONVERTER
IC1025 CXD1171M
LPF
COMP
IC1030 NJM360M
IC1031 :NM
IC1033 :NM
DATA SELECTOR
IC1008 SN74HC151ANS
SAMPLE & HOLD
IC1009(3/3) SN74LS221NS
IC1009(1/3) SN74LS221NS
IC1009(2/3) SN74LS221NS
IC1011(1/2) MC14577CF
IC1034 TC4W53FU
Q1013 DTA144EU
IC1046(2/2) TC7W04FU
AUDIO CLK GEN & PHASE SHIFT
IC1032 CXD8821Q
BUFFER
IC1026 SN74LVT245NS
INHIBIT
IC1050 SN74HC151ANS
11 DELAY
IC1049 TC7S08F
IC1046(1/2) TC7W04FU
IC1043 SN74HC163ANS
LATCH
IC1047(1/3) 74AC74SJ
IC1047(2/3) 74AC74SJ
IC1047(3/3) 74AC74SJ
IC1028(2/2) LM2903PS
DELAY
IC1024(3/3) SN74LS221NS
IC1024(1/3) SN74LS221NS
IC1052 TC4W53FU
PHASE COMP
IC1027 CX23065A
IC1029(2/2) MC34182M
CP1001 512FS
IC1024(2/3) SN74LS221NS
IC1028(1/2) LM2903PS
BUFFER
IC1029(1/2) MC34182M
AUDIO VCO DC
AUDIO PLL LOCK DET
2SA1611 2SC4177 DTA144EU DTC144EU PIN LAYOUT
1SS303 PIN LAYOUT
1SS304 PIN LAYOUT
DA204U PIN LAYOUT
SB007T03Q PIN LAYOUT
NOTE;
ALL RESISTORS ARE 1/10W UNLESS OTHERWISE NOTED.
ALL CAPACITORS ARE 25V UNLESS OTHERWISE NOTED.

1-18 (d)

 VPR-1 (7/7)

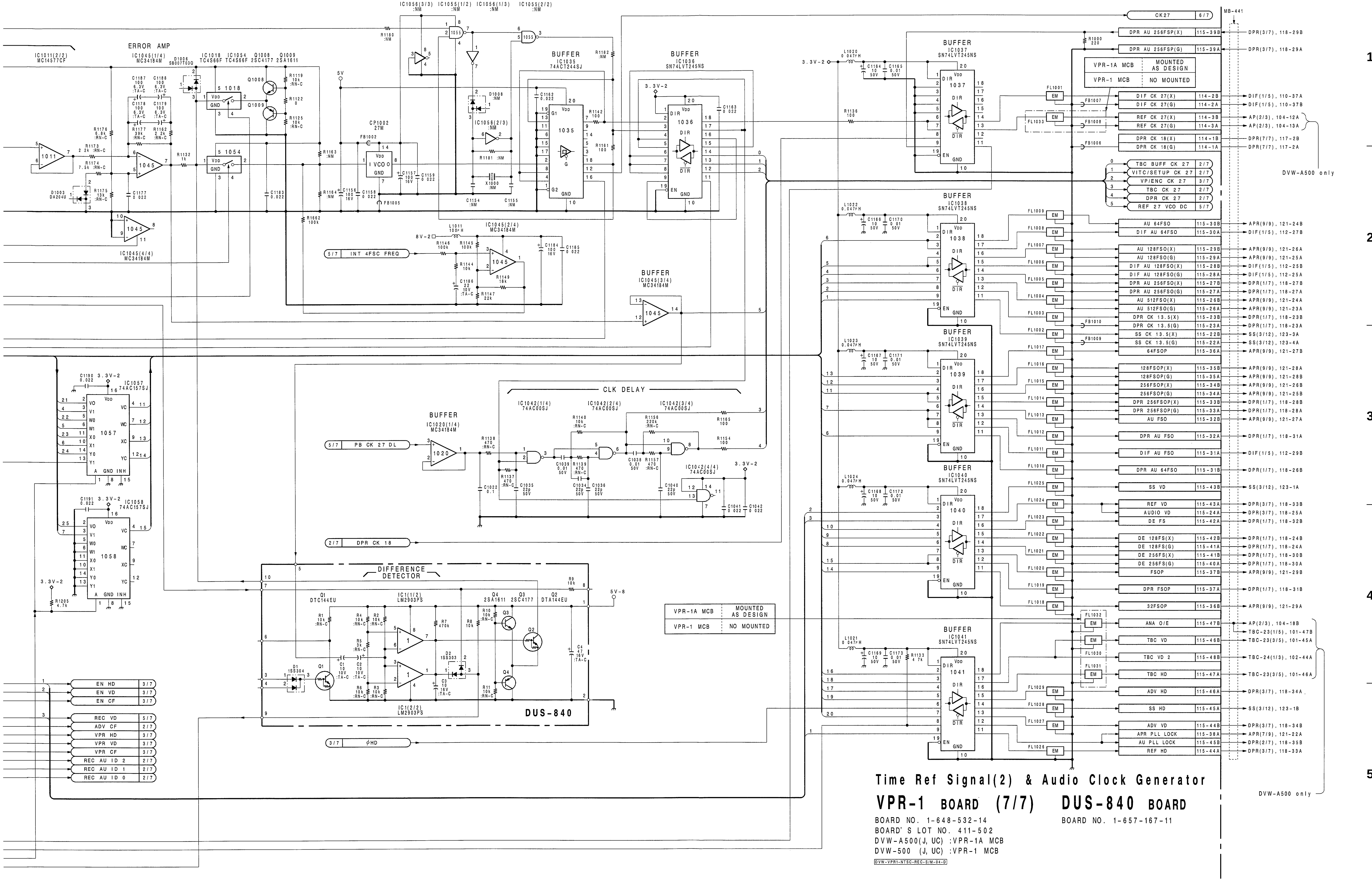
ERROR AMP
BUFFER
IC1035 74ACT244SJ
IC1036 SN74LVT245NS
IC1037 SN74LVT245NS
IC1038 SN74LVT245NS
IC1039 SN74LVT245NS
IC1040 SN74LVT245NS
IC1041 SN74LVT245NS
IC1045(3/4) MC34184M
IC1020(1/4) MC34184M
CLK DELAY
DIFFERENCE DETECTOR
DUS-840
VPR-1A MCB MOUNTED AS DESIGN
VPR-1 MCB NO MOUNTED
DVW-A500 only
Time Ref Signal(2) & Audio Clock Generator
VPR-1 BOARD (7/7)
DUS-840 BOARD
BOARD NO. 1-648-532-14
BOARD'S LOT NO. 411-502
DVW-A500(J, UC) :VPR-1A MCB
DVW-500 (J, UC) :VPR-1 MCB
BOARD NO. 1-657-167-11
DVW-VPR1-NTSC-REC-SIM-04-D

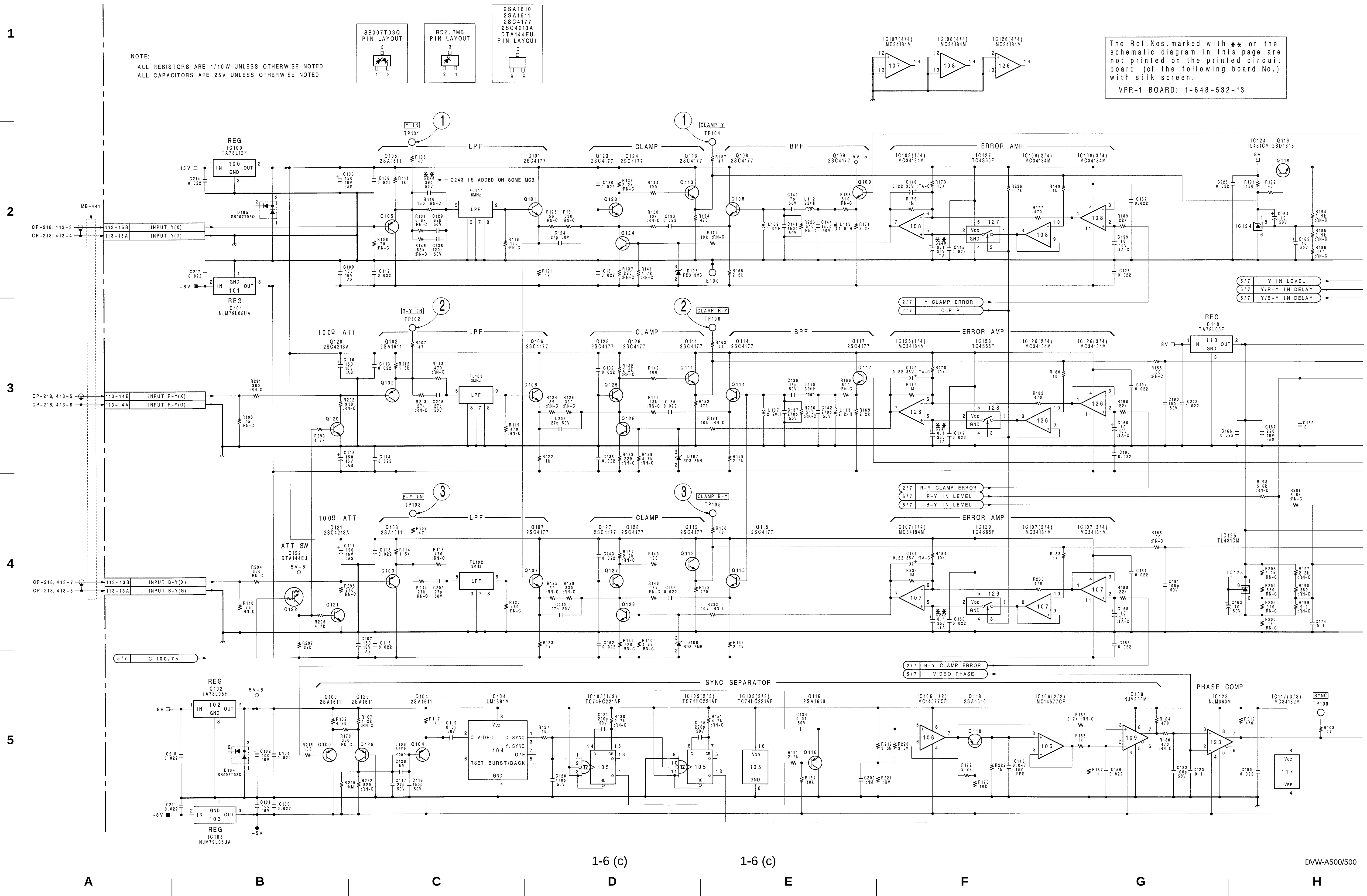
NOTE;
ALL RESISTORS ARE 1/10W UNLESS OTHERWISE NOTED
ALL CAPACITORS ARE 25V UNLESS OTHERWISE NOTED.
SB007T03Q PIN LAYOUT
RD?.?MB PIN LAYOUT
2SA1610 2SA1611 2SC4177 2SC4213A DTA144EU PIN LAYOUT
The Ref.Nos.marked with ** on the schematic diagram in this page are not printed on the printed circuit board (of the following board No.) with silk screen.
VPR-1 BOARD: 1-648-532-13
C243 IS ADDED ON SOME MCB
REG IC100 TA78L12F
REG IC101 NJM79L05UA
REG IC102 TA78L05F
REG IC103 NJM79L05UA
REG IC110 TA78L05F
INPUT Y(X)
INPUT Y(G)
INPUT R-Y(X)
INPUT R-Y(G)
INPUT B-Y(X)
INPUT B-Y(G)
LPF
CLAMP
BPF
ERROR AMP
100Ω ATT
ATT SW
SYNC SEPARATOR
PHASE COMP
Y IN LEVEL
Y/R-Y IN DELAY
Y/B-Y IN DELAY
Y CLAMP ERROR
CLP P
R-Y CLAMP ERROR
R-Y IN LEVEL
B-Y IN LEVEL
B-Y CLAMP ERROR
VIDEO PHASE
C 100/75
SYNC
TP100
1
2
3
4
5
A
B
C
D
E
F
G
H

http://getMANUAL.com

VPR-1 (1/7)

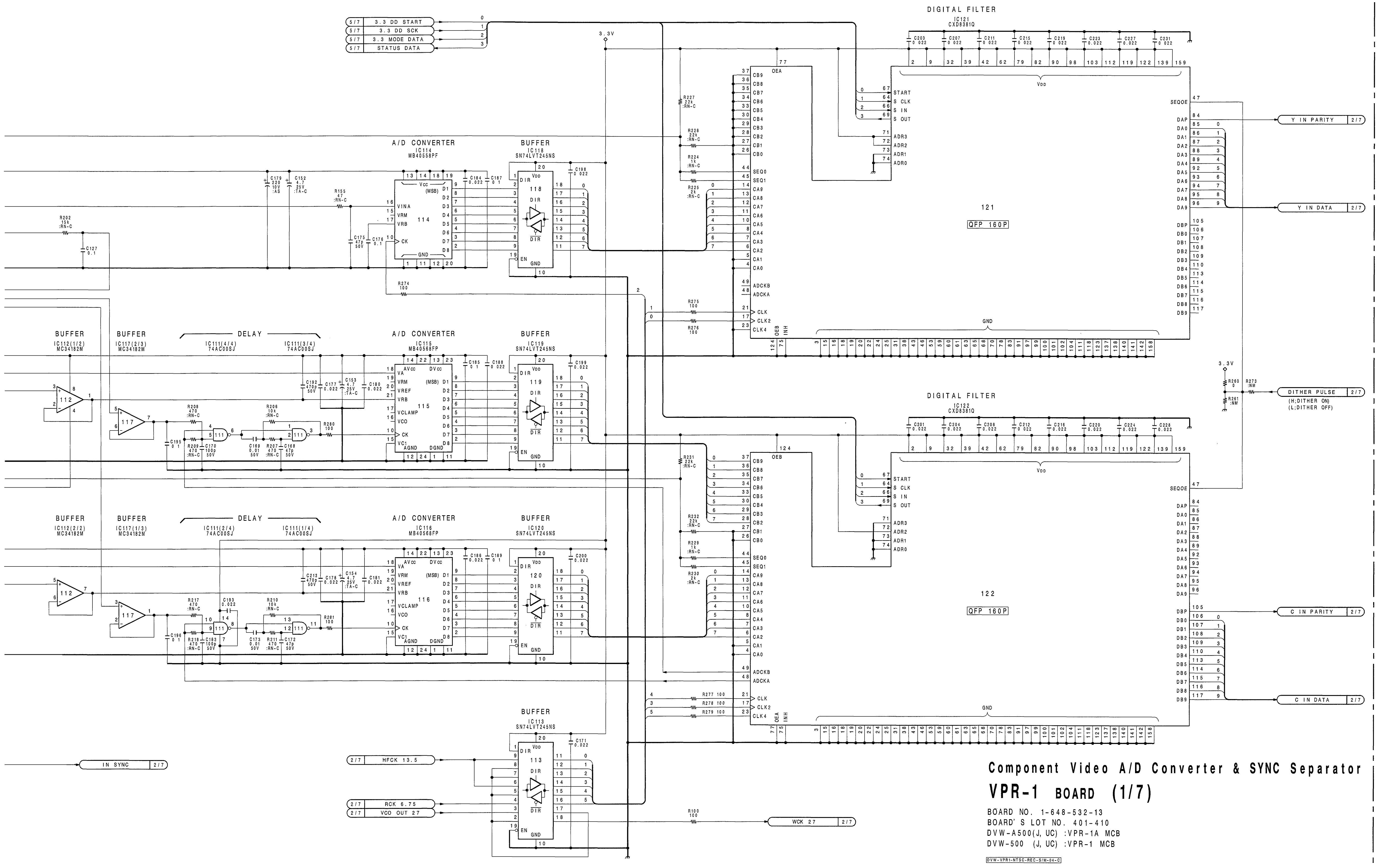

Component Video A/D Converter & SYNC Separator

VPR-1 BOARD (1/7)

BOARD NO. 1-648-532-13
BOARD'S LOT NO. 401-410
DVW-A500(J, UC) :VPR-1A MCB
DVW-500 (J, UC) :VPR-1 MCB

DVW-VPR1-NTSC-REC-SIM-04-C

1 2 3 4 5

1-7 (c)

I J K L M N O P

VPR-1 (2/7)

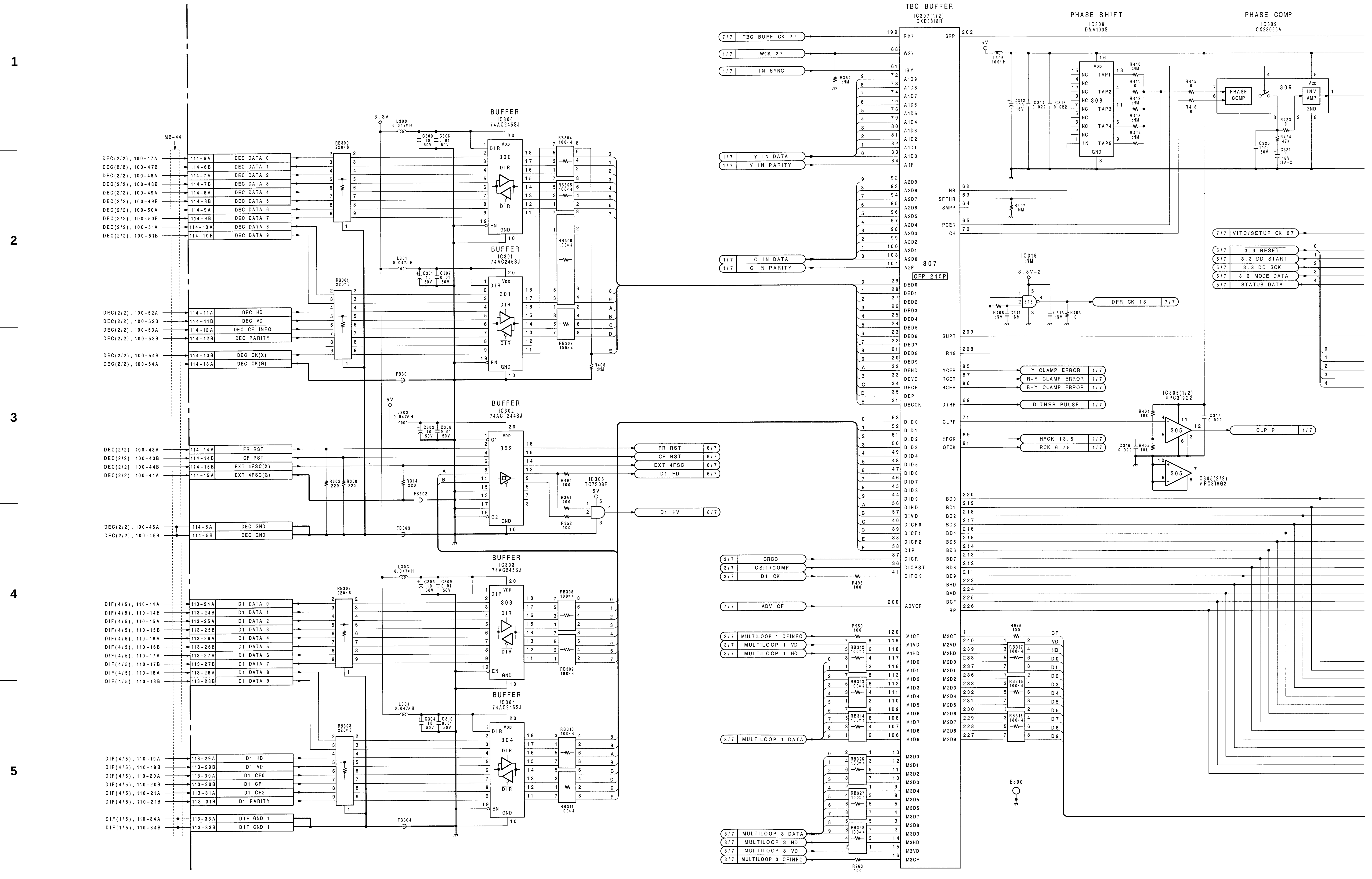

1-8 (c)

A | B | C | D | E | F | G | H

 VPR-1 (2/7)

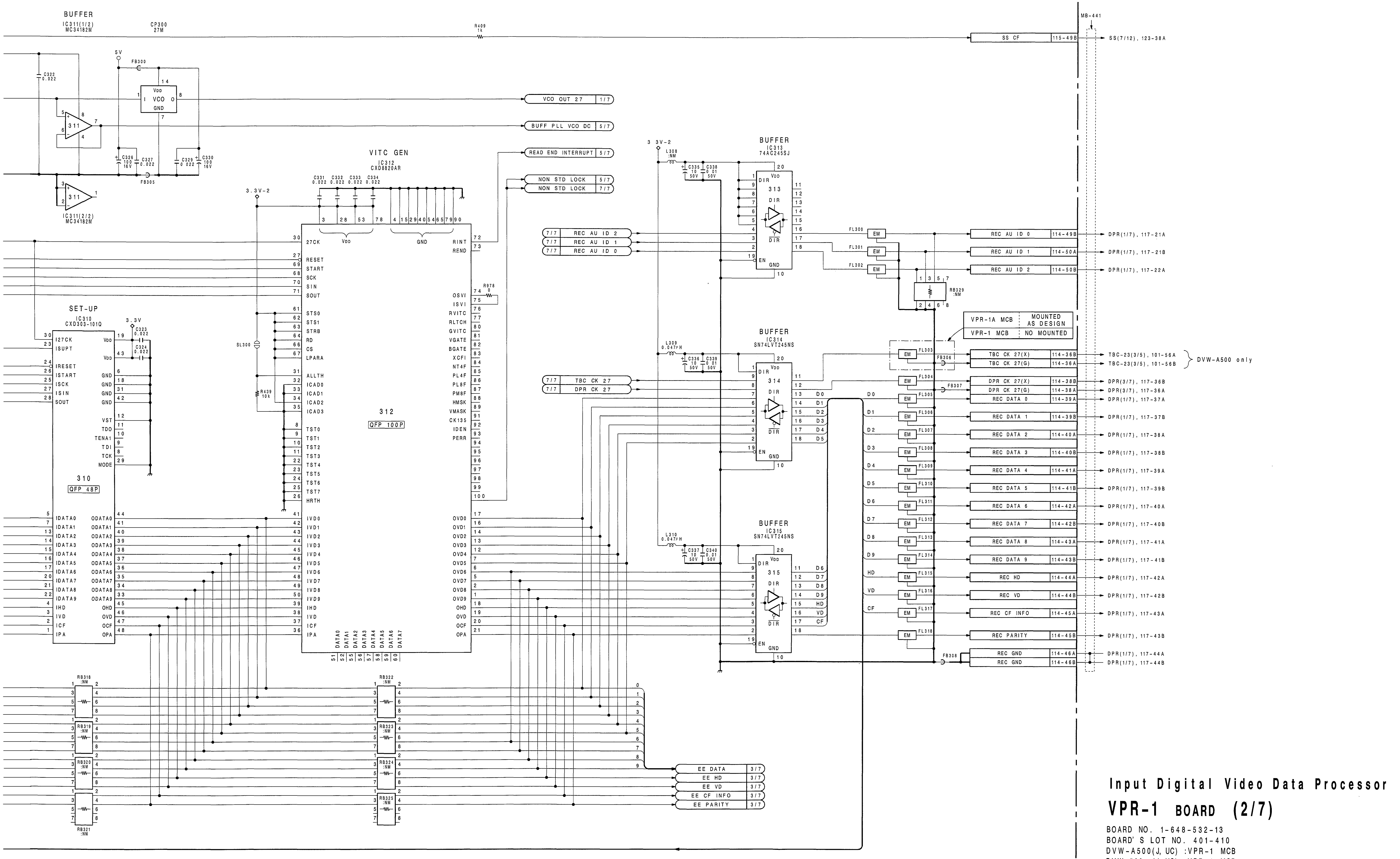

Input Digital Video Data Processor

VPR-1 BOARD (2/7)

BOARD NO. 1-648-532-13
BOARD' S LOT NO. 401-410
DVW-A500(J, UC) :VPR-1 MCB
DVW-500 (J, UC) :VPR-1 MCB

DVW-VPR1-NTSC-REC-S/M-04-C

NOTE;
ALL RESISTORS ARE 1/10W UNLESS OTHERWISE NOTED.
ALL CAPACITORS ARE 25V UNLESS OTHERWISE NOTED.

1 2 3 4 5

I | J | K | L | M | N | O | P

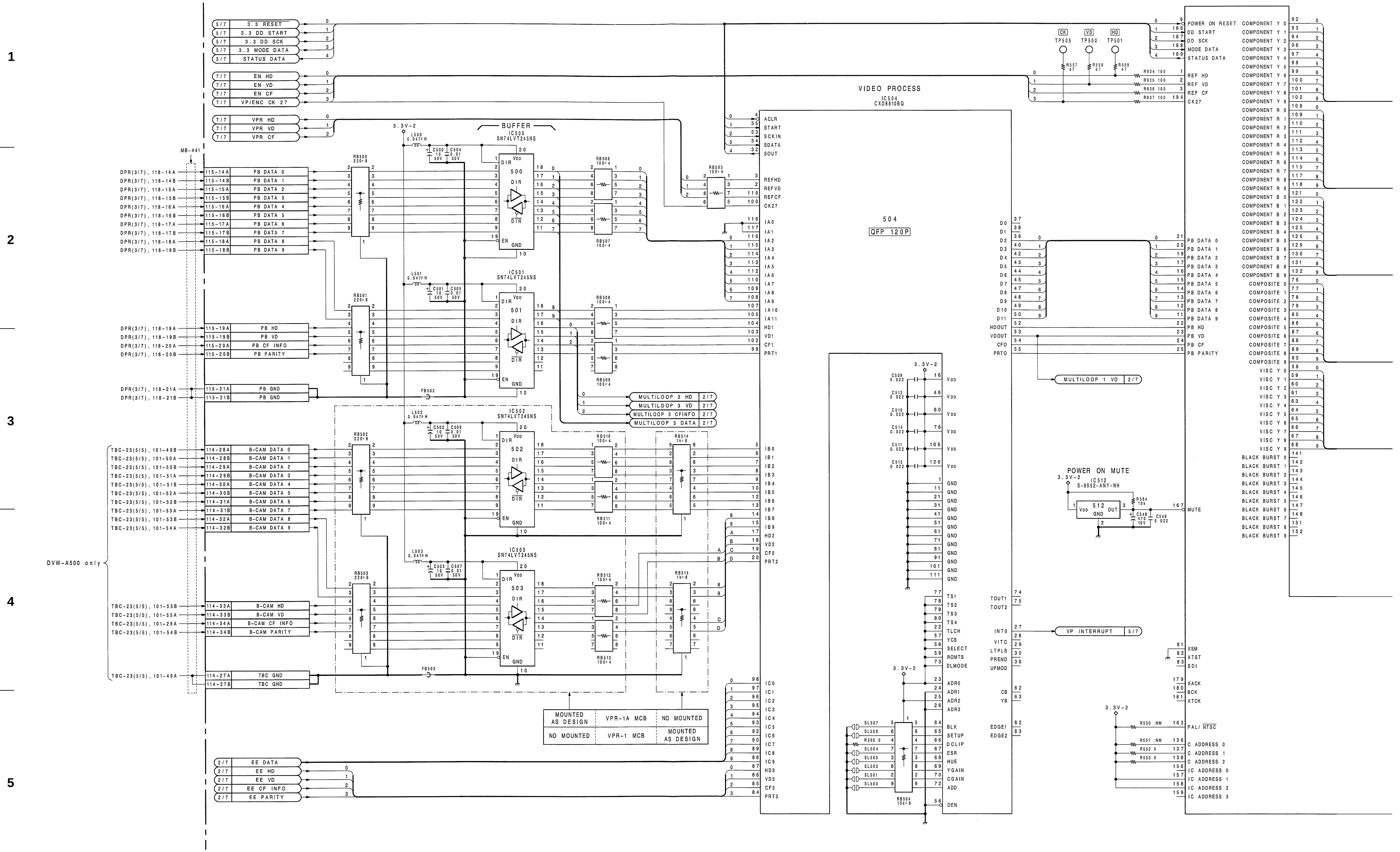

VIDEO PROCESS
IC504
CXD8810BQ
504
QFP 120P
BUFFER
IC500
SN74LVT245NS
IC501
SN74LVT245NS
IC502
SN74LVT245NS
IC503
SN74LVT245NS
POWER ON MUTE
IC512
S-8052-ANY-NH
3.3 RESET
3.3 DD START
3.3 DD SCK
3.3 MODE DATA
STATUS DATA
EN HD
EN VD
EN CF
VP/ENC CK 27
VPR HD
VPR VD
VPR CF
PB DATA 0
PB DATA 1
PB DATA 2
PB DATA 3
PB DATA 4
PB DATA 5
PB DATA 6
PB DATA 7
PB DATA 8
PB DATA 9
PB HD
PB VD
PB CF INFO
PB PARITY
PB GND
B-CAM DATA 0
B-CAM DATA 1
B-CAM DATA 2
B-CAM DATA 3
B-CAM DATA 4
B-CAM DATA 5
B-CAM DATA 6
B-CAM DATA 7
B-CAM DATA 8
B-CAM DATA 9
B-CAM HD
B-CAM VD
B-CAM CF INFO
B-CAM PARITY
TBC GND
DVW-A500 only
MB-441
MULTILOOP 3 HD
MULTILOOP 3 VD
MULTILOOP 3 CFINFO
MULTILOOP 3 DATA
MULTILOOP 1 VD
VP INTERRUPT
EE DATA
EE HD
EE VD
EE CF INFO
EE PARITY
MOUNTED AS DESIGN
VPR-1A MCB
NO MOUNTED
NO MOUNTED
VPR-1 MCB
MOUNTED AS DESIGN
POWER ON RESET
DD START
DD SCK
MODE DATA
STATUS DATA
REF HD
REF VD
REF CF
CK27
MUTE
PAL/NTSC
C ADDRESS 0
C ADDRESS 1
C ADDRESS 2
IC ADDRESS 0
IC ADDRESS 1
IC ADDRESS 2
IC ADDRESS 3

A | B | C | D | E | F | G | H

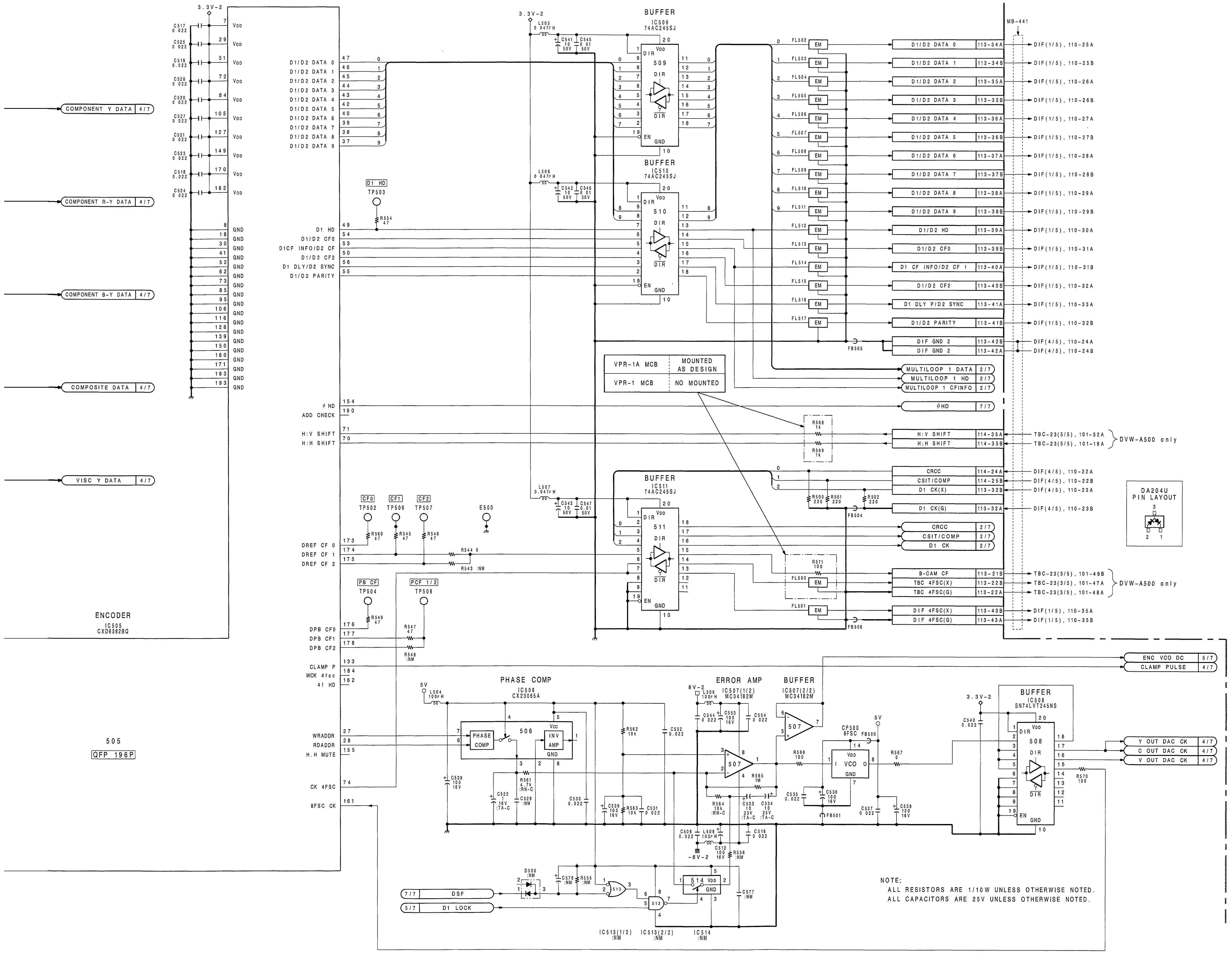

Digital Video Data Encoder
VPR-1 BOARD (3/7)

BOARD NO. 1-648-532-13
BOARD' S LOT NO. 401-410
DVW-A500(J, UC) :VPR-1A MCB
DVW-500 (J, UC) :VPR-1 MCB

DVW-VPR1-NTSC-REC-S/M-04-C

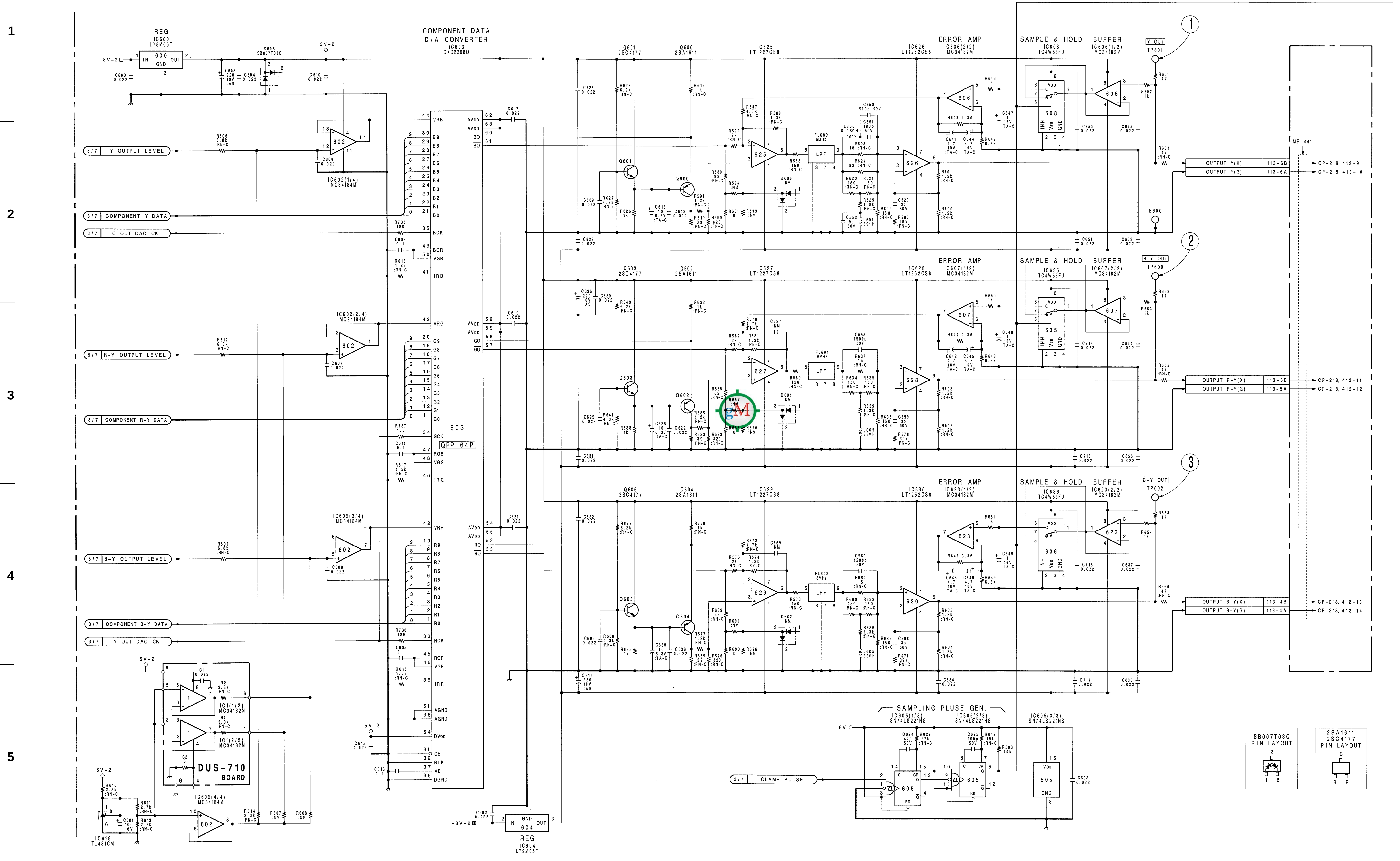

DVW-A500/500

A B C D E F G H

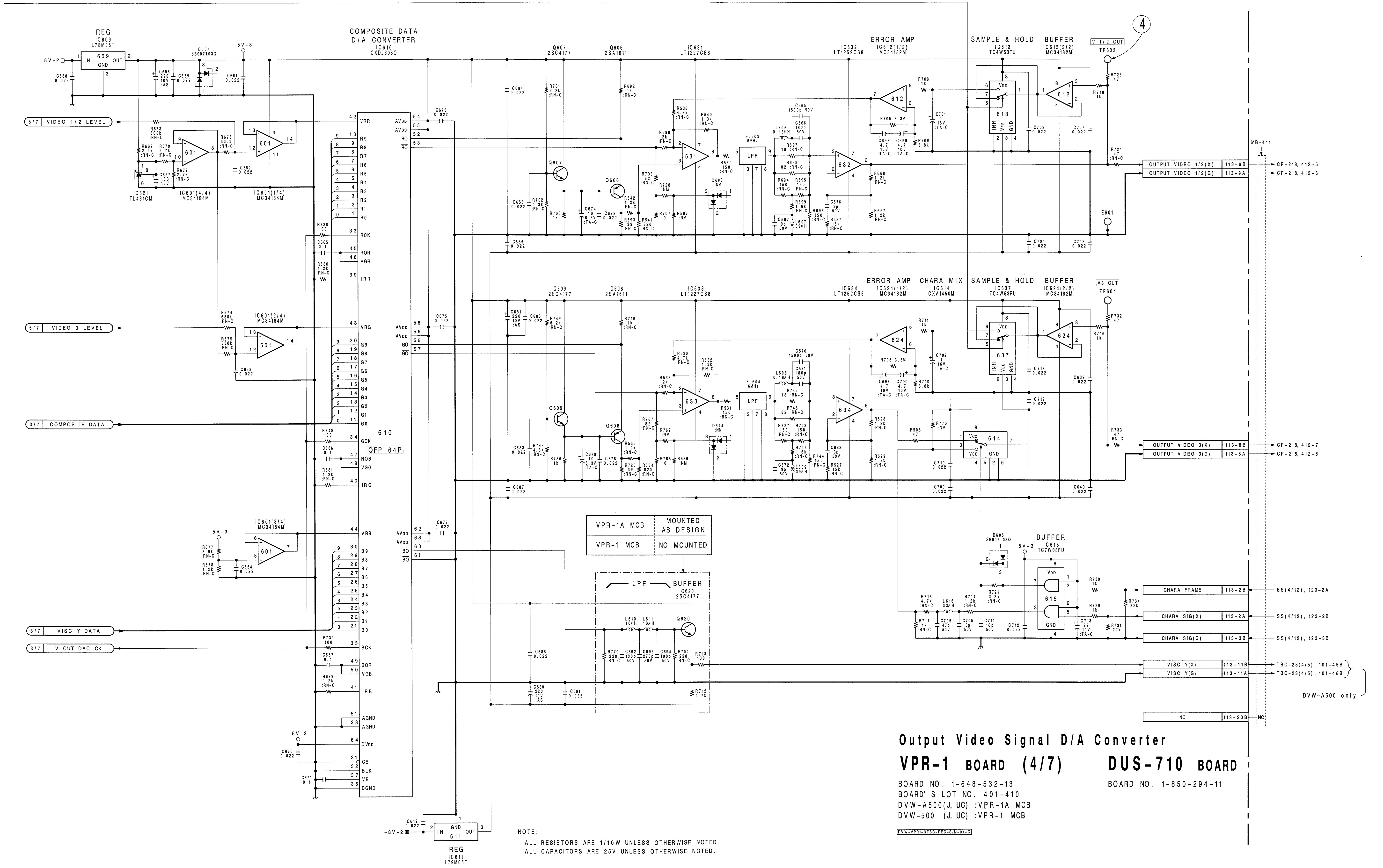

Output Video Signal D/A Converter

VPR-1 BOARD (4/7) DUS-710 BOARD

BOARD NO. 1-648-532-13

BOARD' S LOT NO. 401-410

DVW-A500(J, UC) :VPR-1A MCB

DVW-500 (J, UC) :VPR-1 MCB

BOARD NO. 1-650-294-11

DVW-VPR1-NTSC-REC-S/M-04-C

NOTE:

ALL RESISTORS ARE 1/10W UNLESS OTHERWISE NOTED.

ALL CAPACITORS ARE 25V UNLESS OTHERWISE NOTED.

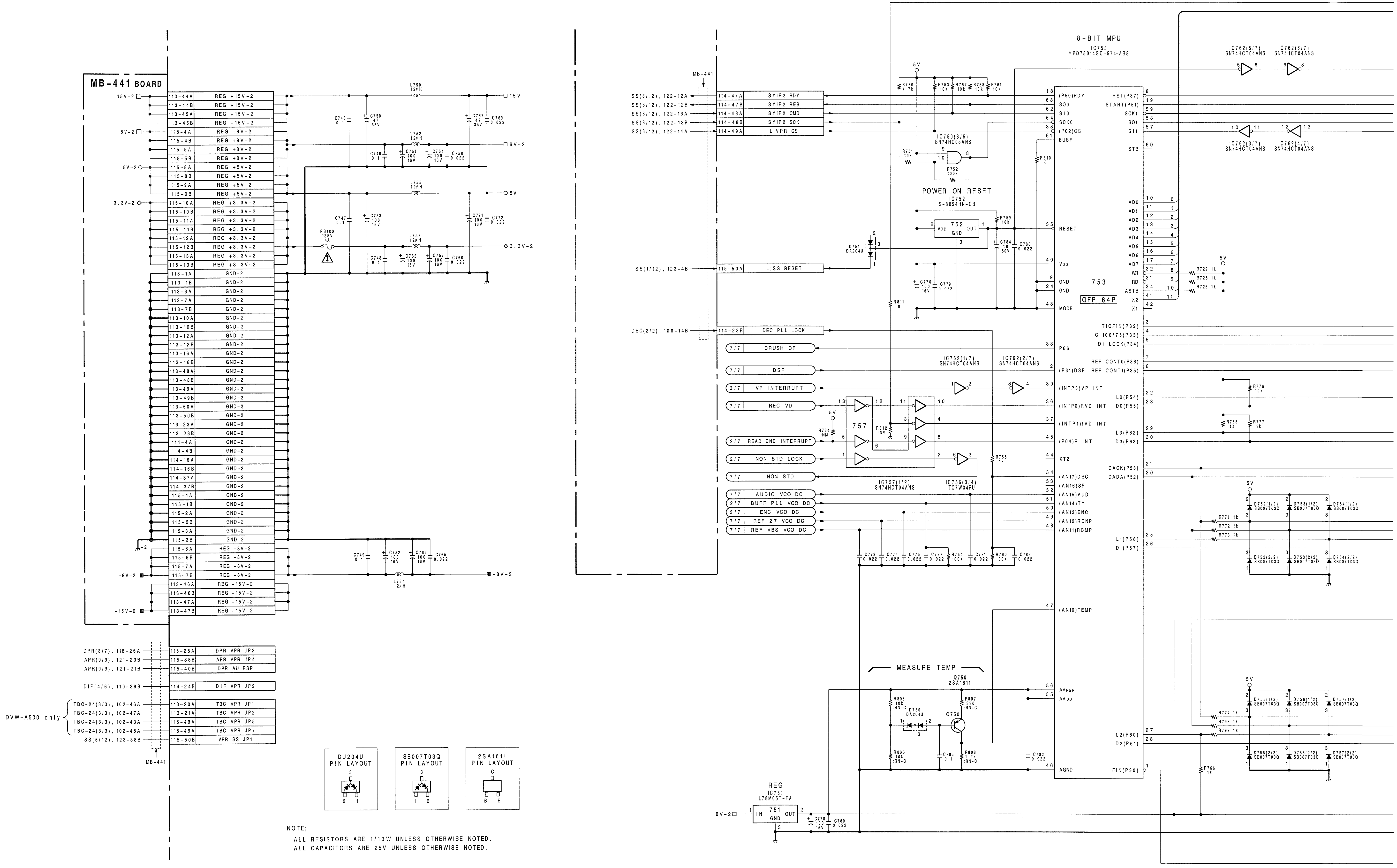
MB-441 BOARD
8-BIT MPU
IC753
POWER ON RESET
IC752
MEASURE TEMP
REG
IC751
DU204U PIN LAYOUT
SB007T03Q PIN LAYOUT
2SA1611 PIN LAYOUT
NOTE;
ALL RESISTORS ARE 1/10W UNLESS OTHERWISE NOTED.
ALL CAPACITORS ARE 25V UNLESS OTHERWISE NOTED.

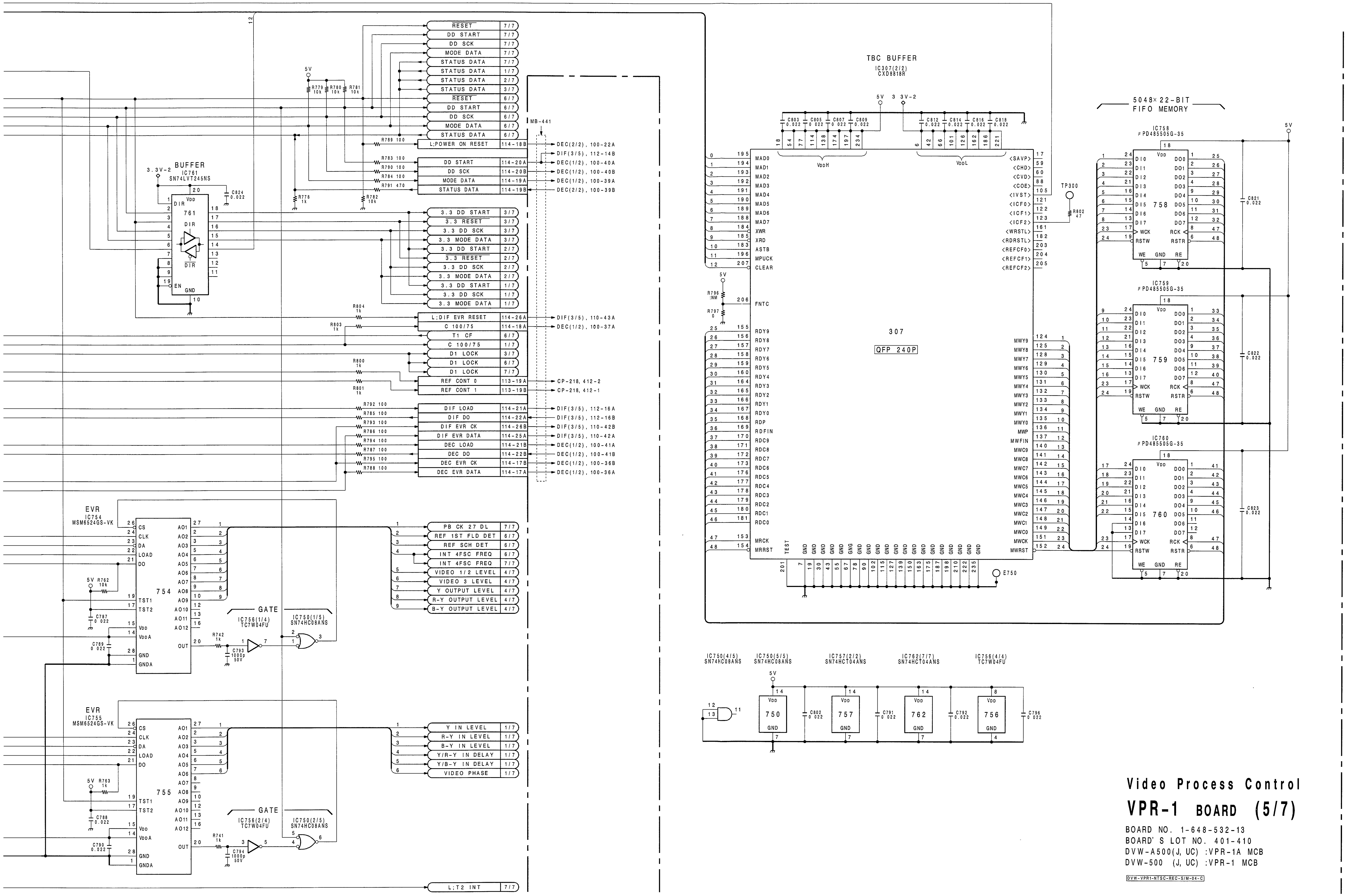

Video Process Control

VPR-1 BOARD (5/7)

BOARD NO. 1-648-532-13
BOARD' S LOT NO. 401-410
DVW-A500(J, UC) :VPR-1A MCB
DVW-500 (J, UC) :VPR-1 MCB

DVW-VPR1-NTSC-REC-S/M-04-C

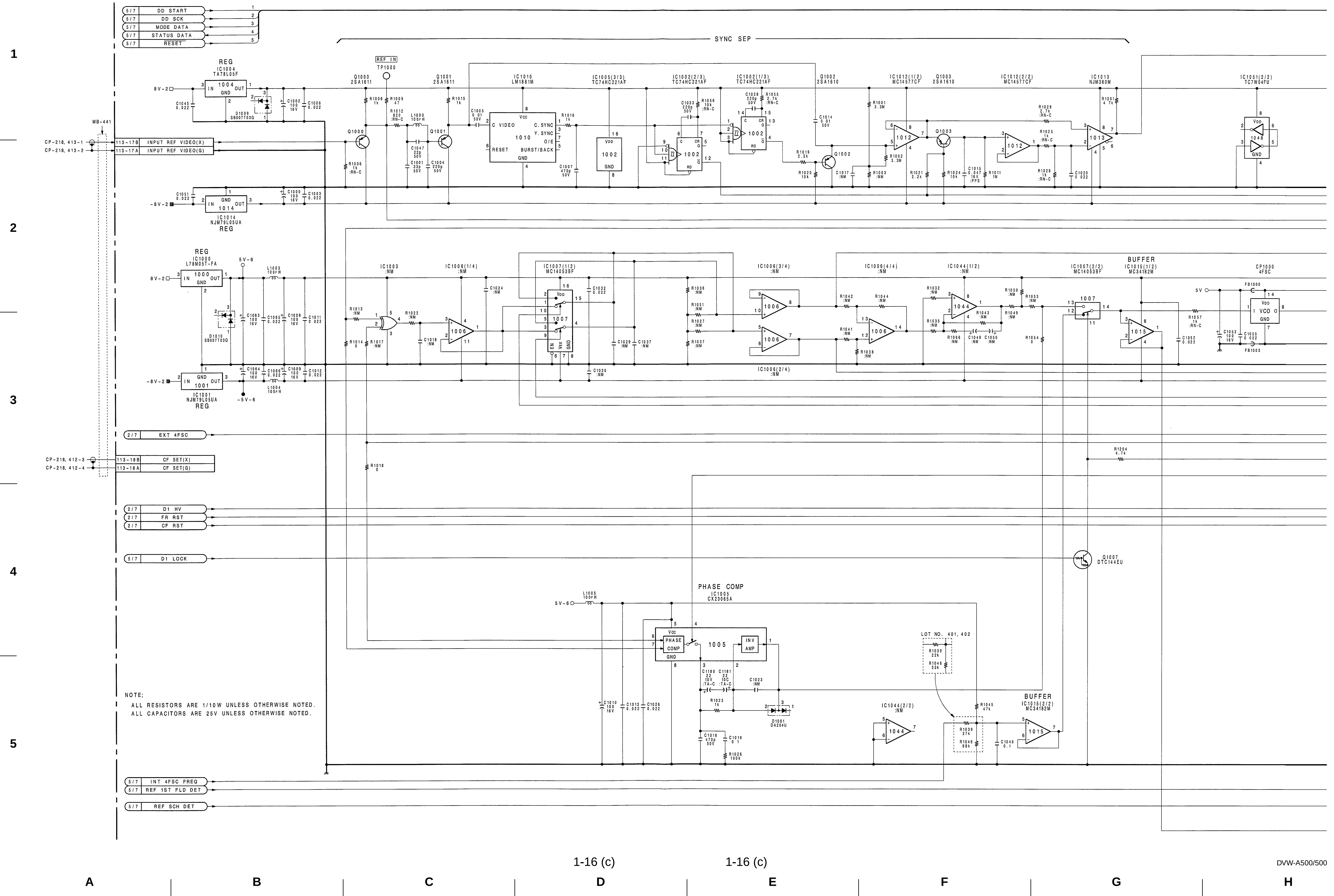
DD START
DD SCK
MODE DATA
STATUS DATA
RESET
SYNC SEP
REF IN
TP1000
INPUT REF VIDEO(X)
INPUT REF VIDEO(G)
EXT 4FSC
CF SET(X)
CF SET(G)
D1 HV
FR RST
CF RST
D1 LOCK
INT 4FSC FREQ
REF 1ST FLD DET
REF SCH DET
BUFFER
PHASE COMP
IC1005
CX23065A
LOT NO. 401, 402
NOTE;
ALL RESISTORS ARE 1/10W UNLESS OTHERWISE NOTED.
ALL CAPACITORS ARE 25V UNLESS OTHERWISE NOTED.

http://getMANUAL.com

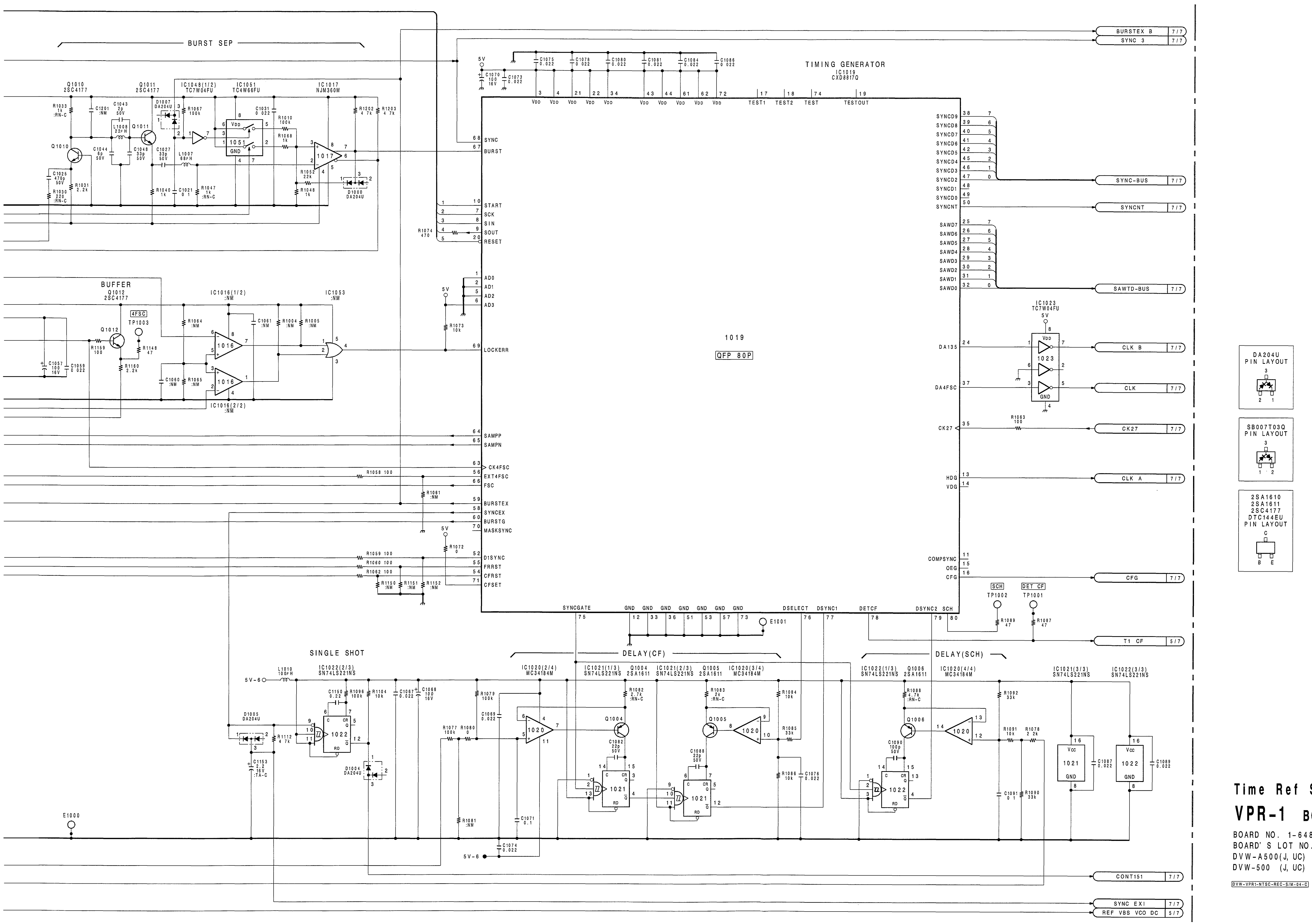

Time Ref Signal(1)

VPR-1 BOARD (6/7)

BOARD NO. 1-648-532-13
BOARD'S LOT NO. 401-410
DVW-A500(J, UC) :VPR-1A MCB
DVW-500 (J, UC) :VPR-1 MCB

DVW-VPR1-NTSC-REC-S/M-04-C

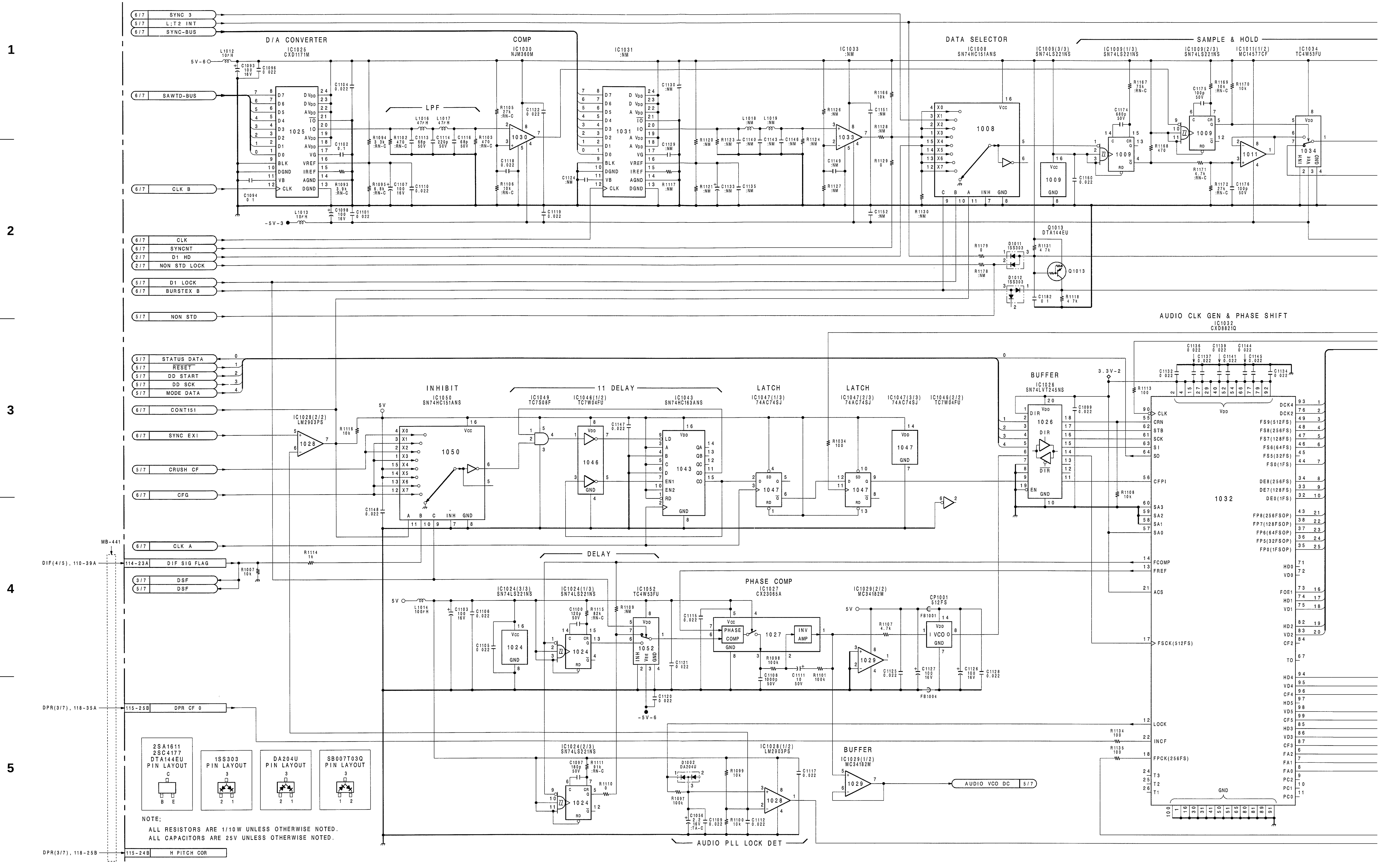
D/A CONVERTER
IC1025 CXD1171M
COMP
IC1030 NJM360M
IC1031 :NM
IC1033 :NM
DATA SELECTOR
IC1008 SN74HC151ANS
IC1009(3/3) SN74LS221NS
SAMPLE & HOLD
IC1009(1/3) SN74LS221NS
IC1009(2/3) SN74LS221NS
IC1011(1/2) MC14577CF
IC1034 TC4W53FU
LPF
Q1013 DTA144EU
AUDIO CLK GEN & PHASE SHIFT
IC1032 CXD8821Q
BUFFER
IC1026 SN74LVT245NS
INHIBIT
IC1050 SN74HC151ANS
11 DELAY
IC1049 TC7S08F
IC1046(1/2) TC7W04FU
IC1043 SN74HC163ANS
LATCH
IC1047(1/3) 74AC74SJ
LATCH
IC1047(2/3) 74AC74SJ
IC1047(3/3) 74AC74SJ
IC1046(2/2) TC7W04FU
IC1028(2/2) LM2903PS
DELAY
IC1024(3/3) SN74LS221NS
IC1024(1/3) SN74LS221NS
IC1052 TC4W53FU
PHASE COMP
IC1027 CX23065A
IC1029(2/2) MC34182M
CP1001 512FS
IC1024(2/3) SN74LS221NS
IC1028(1/2) LM2903PS
BUFFER
IC1029(1/2) MC34182M
AUDIO PLL LOCK DET
AUDIO VCO DC 5/7
SYNC 3
L;T2 INT
SYNC-BUS
SAWTD-BUS
CLK B
CLK
SYNCNT
D1 HD
NON STD LOCK
D1 LOCK
BURSTEX B
NON STD
STATUS DATA
RESET
DD START
DD SCK
MODE DATA
CONT151
SYNC EXI
CRUSH CF
CFG
CLK A
DIF SIG FLAG
DSF
DSF
DPR CF 0
H PITCH COR
DIF(4/5), 110-39A
DPR(3/7), 118-35A
DPR(3/7), 118-25B
MB-441
2SA1611
2SC4177
DTA144EU
PIN LAYOUT
1SS303
PIN LAYOUT
DA204U
PIN LAYOUT
SB007T03Q
PIN LAYOUT
NOTE;
ALL RESISTORS ARE 1/10W UNLESS OTHERWISE NOTED.
ALL CAPACITORS ARE 25V UNLESS OTHERWISE NOTED.
1
2
3
4
5

A B C D E F G H

 VPR-1 (7/7)

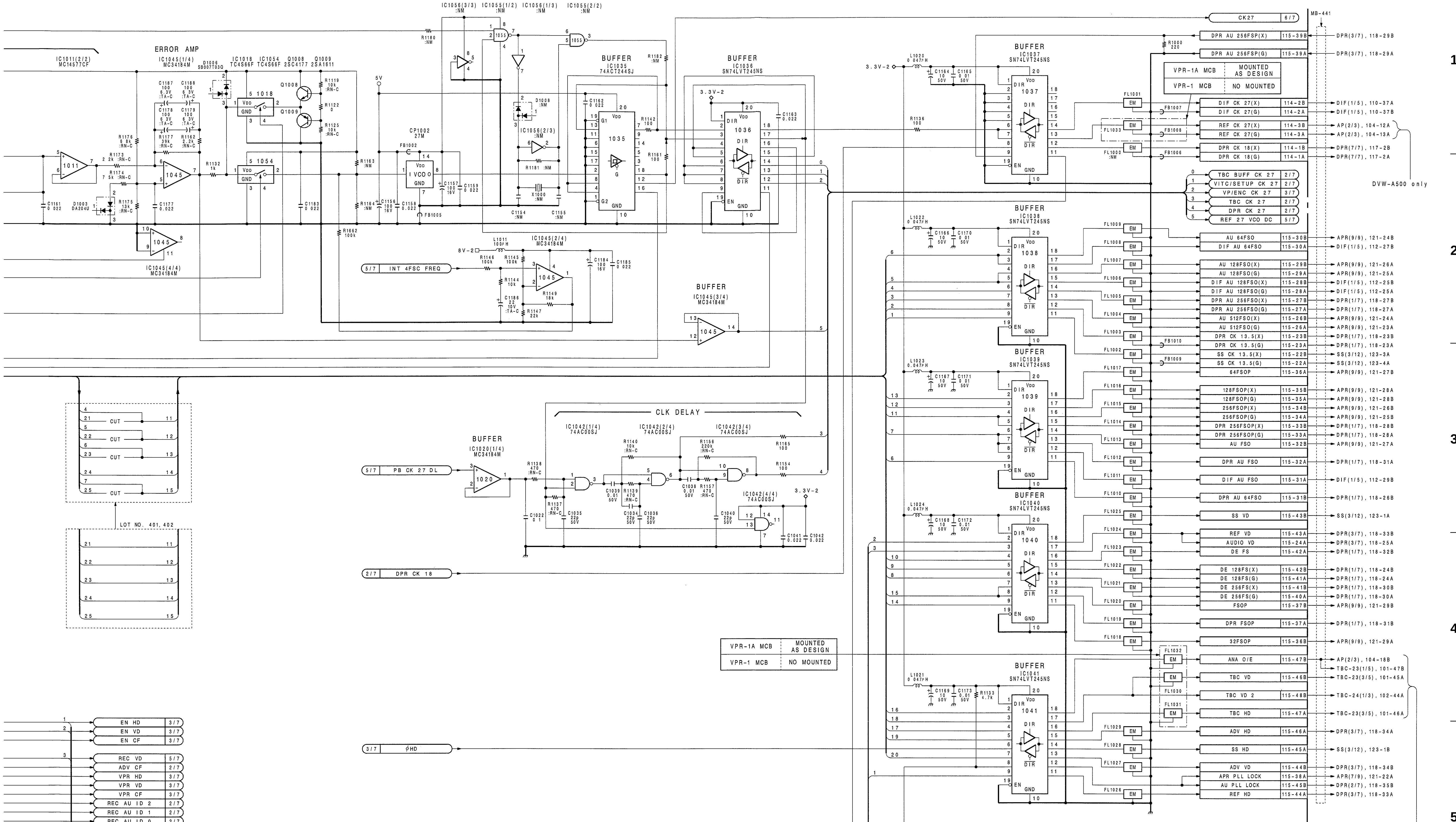

Time Ref Signal(2) & Audio Clock Generator

VPR-1 BOARD (7/7)

BOARD NO. 1-648-532-13
BOARD' S LOT NO. 401-410
DVW-A500(J, UC) :VPR-1A MCB
DVW-500 (J, UC) :VPR-1 MCB

DVW-VPR1-NTSC-REC-S/M-04-C

 VPR-1 (1/7)

NOTE;
ALL RESISTORS ARE 1/10W UNLESS OTHERWISE NOTED.
ALL CAPACITORS ARE 25V UNLESS OTHERWISE NOTED.

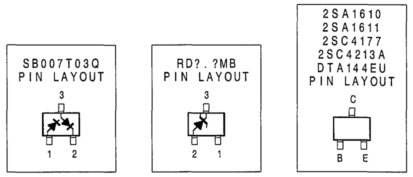

※PART LIST FOR LOT NO. 306-308, AND 309(SOME MCB)

ADDRESS	PART DESCRIPTION	ADDRESS	PART DESCRIPTION	ADDRESS	PART DESCRIPTION
D-2	R150 100k :RN-C	G-2	R191 470	J-3	C8103 NOTHING
D-3	R145 82k :RN-C	G-3	C167 47 6.3V :AS	J-4	C8104 NOTHING
D-4	R148 82k :RN-C	J-2	C179 100 16V	K-2	C8102 NOTHING
E-2	C140 10p 50V	E-3	C136 22p 50V	L-1/2	R224 4.7k RN-C
	C141 47p 50V		C137 100p 50V		R225 10k :RN-C
	C144 15p 50V		C142 33p 50V		R227 4.3k :RN-C
	L109 2.2μH		L107 4.7μH		R228 4.3k :RN-C
	L112 10μH		L110 22μH	L-3/4	R229 4.7k :RN-C
	L115 8.2μH		L113 18μH		R230 10k :RN-C
	R223 NOTHING		R226 NOTHING		R231 4.3k :RN-C
					R232 4.3k :RN-C

The Ref.Nos. marked with ※※※ on the schematic diagram in this page are not printed on the printed circuit board (of the following board No.) with silk screen.

VPR-1 BOARD: 1-648-532-12

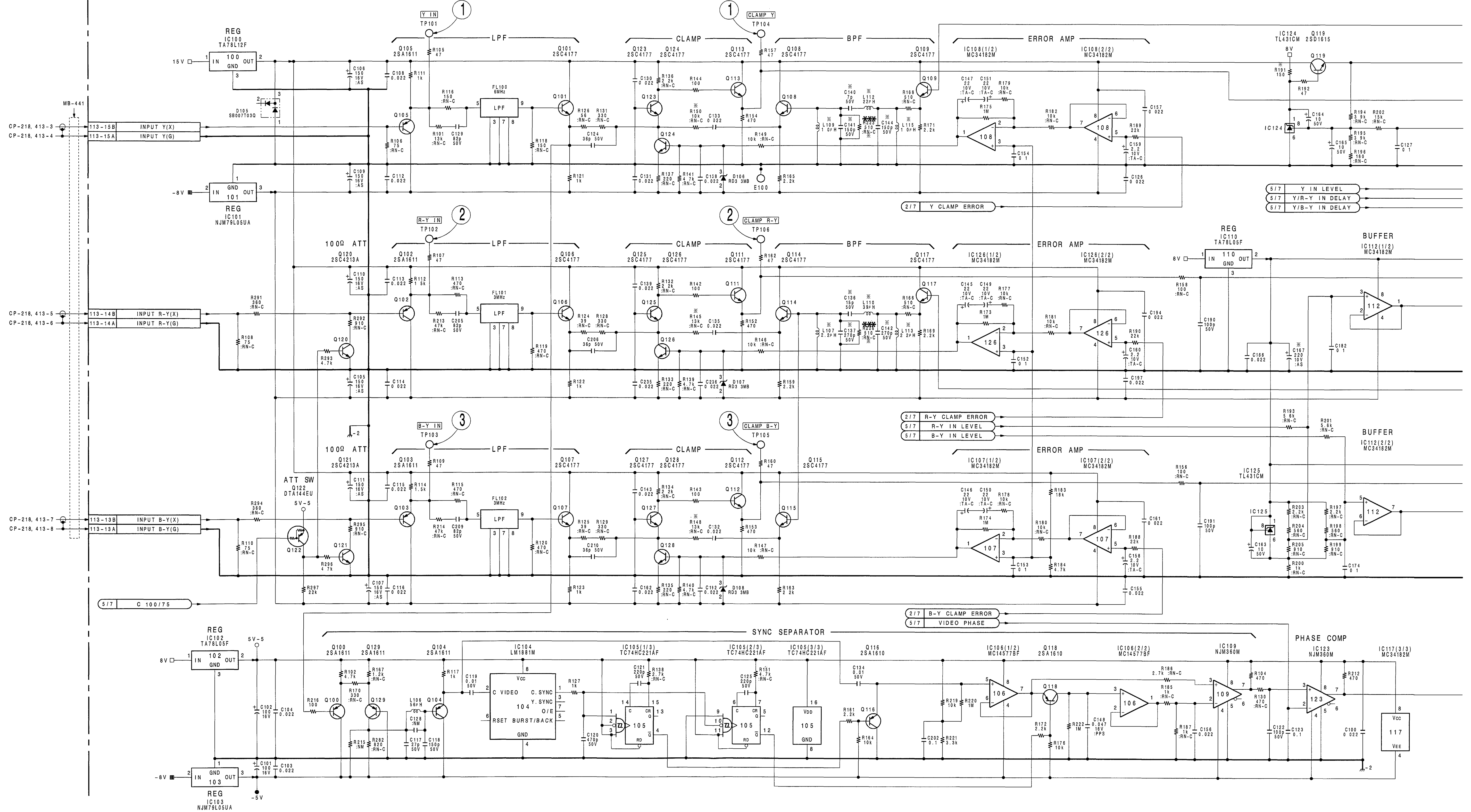

 1-6 (b)

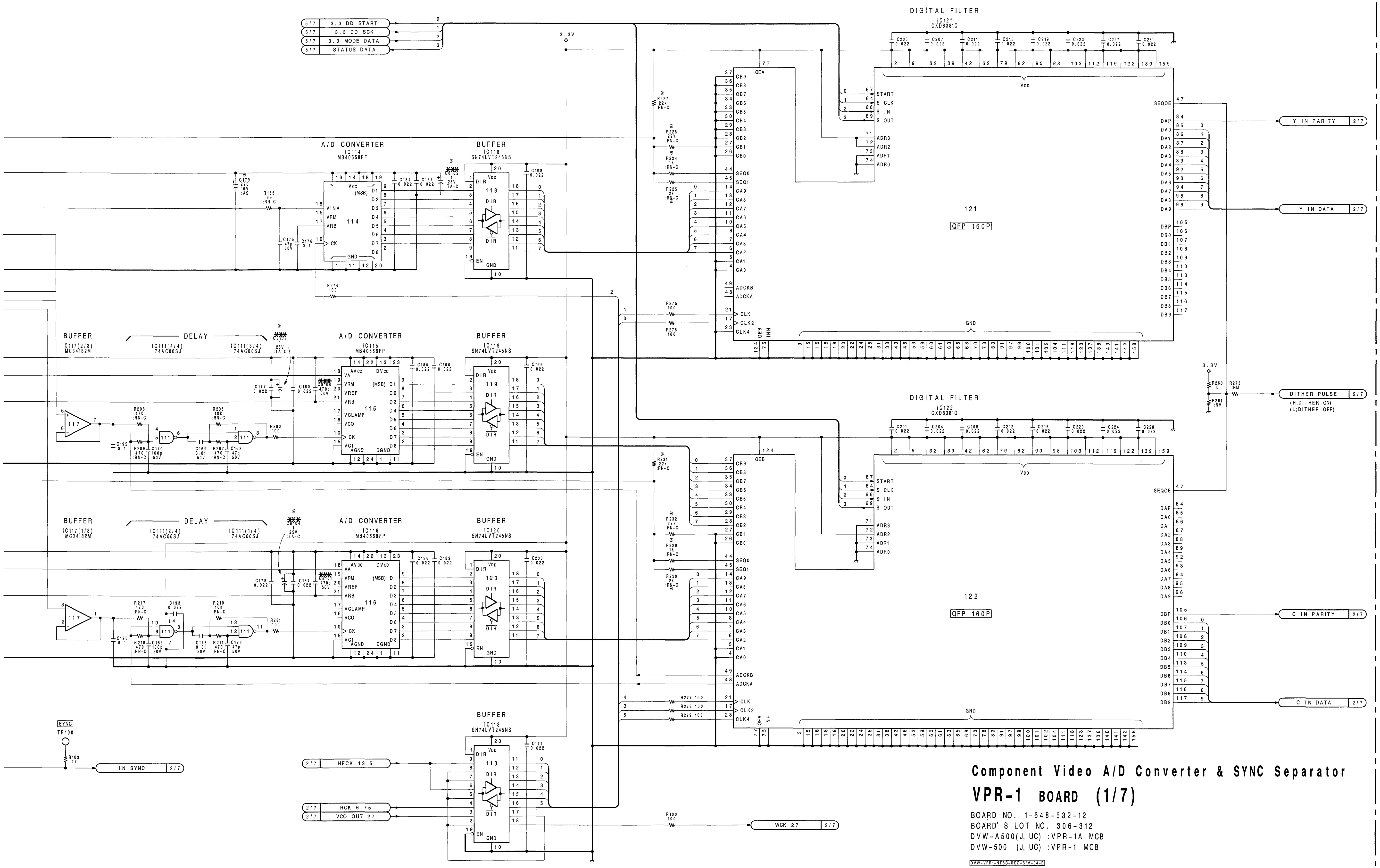

Component Video A/D Converter & SYNC Separator

VPR-1 BOARD (1/7)

BOARD NO. 1-648-532-12
BOARD'S LOT NO. 306-312
DVW-A500(J, UC) :VPR-1A MCB
DVW-500 (J, UC) :VPR-1 MCB

DVW-VPR1-NTSC-REC-S/M-04-8

1 2 3 4 5

I J K L M N O P

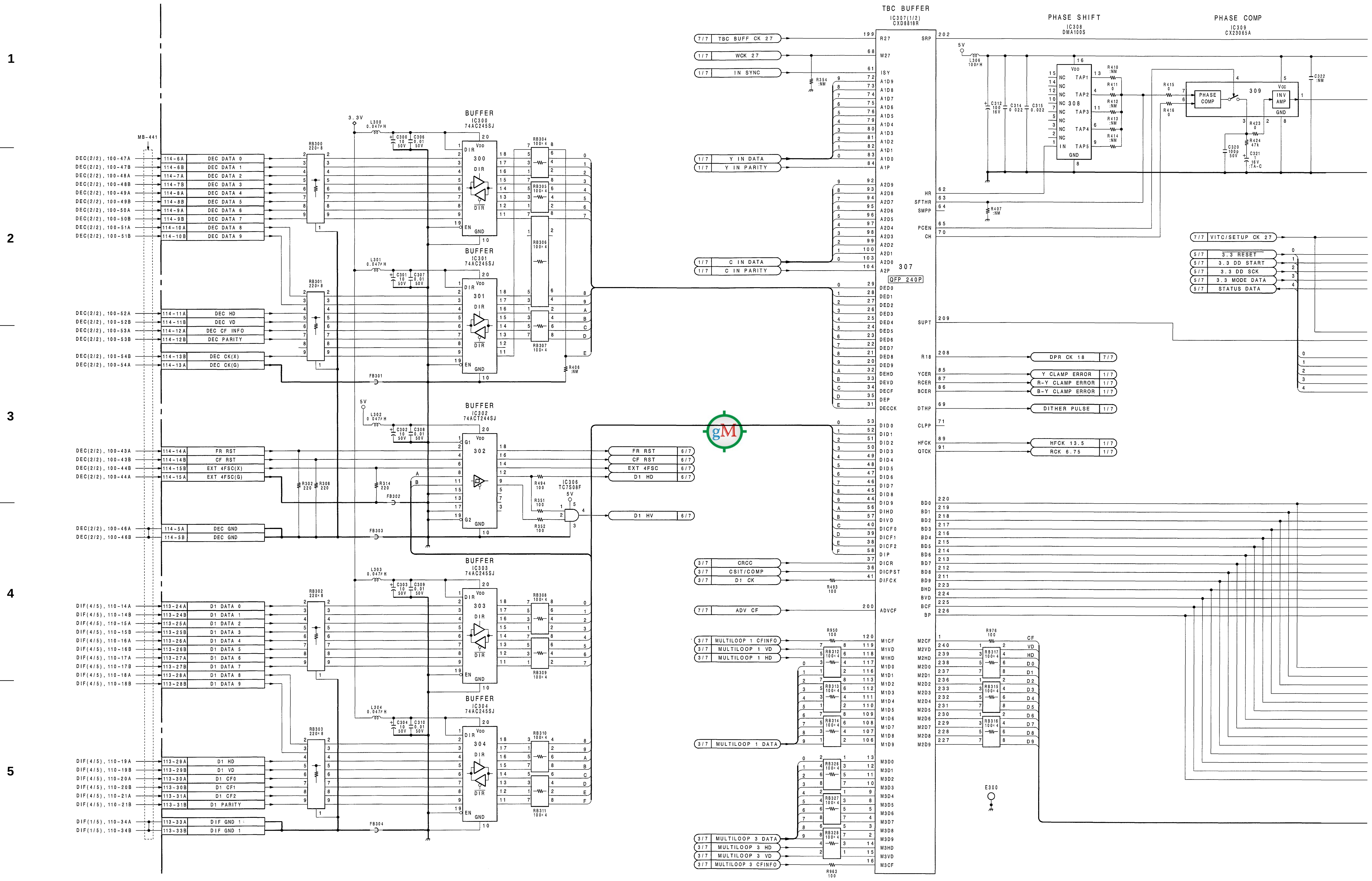
TBC BUFFER
IC307(1/2)
CXD8818R
PHASE SHIFT
IC308
DMA100S
PHASE COMP
IC309
CX23065A
BUFFER
IC300
74AC245SJ
BUFFER
IC301
74AC245SJ
BUFFER
IC302
74ACT244SJ
BUFFER
IC303
74AC245SJ
BUFFER
IC304
74AC245SJ
IC306
TC7S08F
MB-441
TBC BUFF CK 27
WCK 27
IN SYNC
Y IN DATA
Y IN PARITY
C IN DATA
C IN PARITY
DEC DATA 0
DEC DATA 1
DEC DATA 2
DEC DATA 3
DEC DATA 4
DEC DATA 5
DEC DATA 6
DEC DATA 7
DEC DATA 8
DEC DATA 9
DEC HD
DEC VD
DEC CF INFO
DEC PARITY
DEC CK(X)
DEC CK(G)
FR RST
CF RST
EXT 4FSC(X)
EXT 4FSC(G)
DEC GND
D1 DATA 0
D1 DATA 1
D1 DATA 2
D1 DATA 3
D1 DATA 4
D1 DATA 5
D1 DATA 6
D1 DATA 7
D1 DATA 8
D1 DATA 9
D1 HD
D1 VD
D1 CF0
D1 CF1
D1 CF2
D1 PARITY
DIF GND 1
EXT 4FSC
D1 HD
D1 HV
CRCC
CSIT/COMP
D1 CK
ADV CF
MULTILOOP 1 CFINFO
MULTILOOP 1 VD
MULTILOOP 1 HD
MULTILOOP 1 DATA
MULTILOOP 3 DATA
MULTILOOP 3 HD
MULTILOOP 3 VD
MULTILOOP 3 CFINFO
VITC/SETUP CK 27
3.3 RESET
3.3 DD START
3.3 DD SCK
3.3 MODE DATA
STATUS DATA
DPR CK 18
Y CLAMP ERROR
R-Y CLAMP ERROR
B-Y CLAMP ERROR
DITHER PULSE
HFCK 13.5
RCK 6.75
QFP 240P
E300

VPR-1 (2/7)

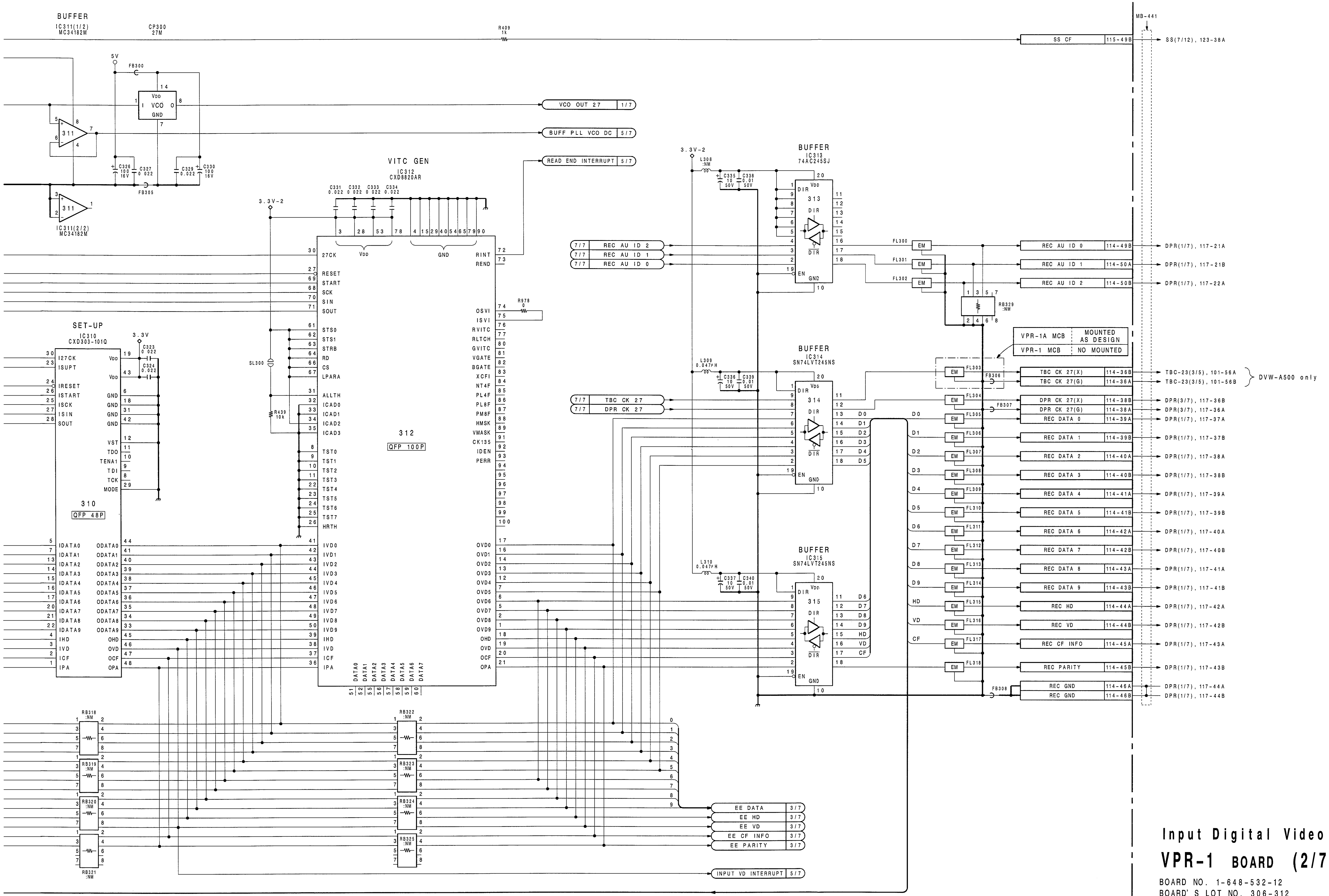

NOTE;
ALL RESISTORS ARE 1/10W UNLESS OTHERWISE NOTED.
ALL CAPACITORS ARE 25V UNLESS OTHERWISE NOTED.

Input Digital Video Data Processor

VPR-1 BOARD (2/7)

BOARD NO. 1-648-532-12
BOARD' S LOT NO. 306-312
DVW-A500(J, UC) :VPR-1A MCB
DVW-500 (J, UC) :VPR-1 MCB

DVW-VPR1-NTSC-REC-SIM-04-B

 VPR-1 (3/7)

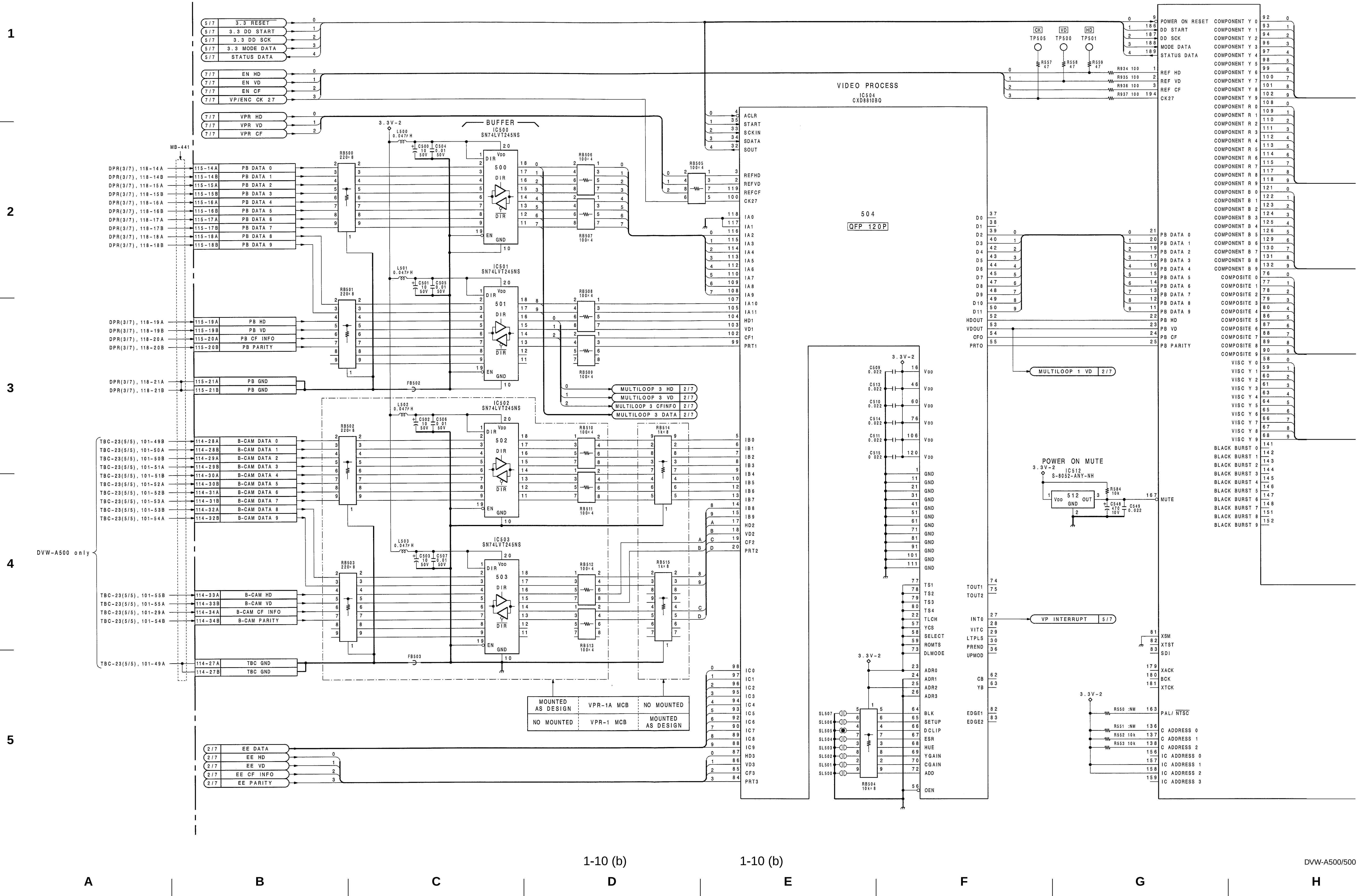

1
2
3
4
5
3.3 RESET
3.3 DD START
3.3 DD SCK
3.3 MODE DATA
STATUS DATA
EN HD
EN VD
EN CF
VP/ENC CK 27
VPR HD
VPR VD
VPR CF
MB-441
PB DATA 0
PB DATA 1
PB DATA 2
PB DATA 3
PB DATA 4
PB DATA 5
PB DATA 6
PB DATA 7
PB DATA 8
PB DATA 9
PB HD
PB VD
PB CF INFO
PB PARITY
PB GND
B-CAM DATA 0
B-CAM DATA 1
B-CAM DATA 2
B-CAM DATA 3
B-CAM DATA 4
B-CAM DATA 5
B-CAM DATA 6
B-CAM DATA 7
B-CAM DATA 8
B-CAM DATA 9
DVW-A500 only
B-CAM HD
B-CAM VD
B-CAM CF INFO
B-CAM PARITY
TBC GND
EE DATA
EE HD
EE VD
EE CF INFO
EE PARITY
BUFFER
IC500 SN74LVT245NS
IC501 SN74LVT245NS
IC502 SN74LVT245NS
IC503 SN74LVT245NS
MULTILOOP 3 HD
MULTILOOP 3 VD
MULTILOOP 3 CFINFO
MULTILOOP 3 DATA
MOUNTED AS DESIGN
VPR-1A MCB
NO MOUNTED
VPR-1 MCB
VIDEO PROCESS
IC504 CXD8810BQ
504
QFP 120P
POWER ON MUTE
IC512 S-8052-ANY-NH
MULTILOOP 1 VD
VP INTERRUPT
TP505
TP500
TP501
POWER ON RESET
DD START
DD SCK
MODE DATA
STATUS DATA
REF HD
REF VD
REF CF
CK27
MUTE
XSM
XTST
SDI
XACK
BCK
XTCK
PAL/NTSC
C ADDRESS 0
C ADDRESS 1
C ADDRESS 2
IC ADDRESS 0
IC ADDRESS 1
IC ADDRESS 2
IC ADDRESS 3
COMPONENT Y 0
COMPONENT R 0
COMPONENT B 0
COMPOSITE 0
VISC Y 0
BLACK BURST 0
A
B
C
D
E
F
G
H

 1-10 (b)

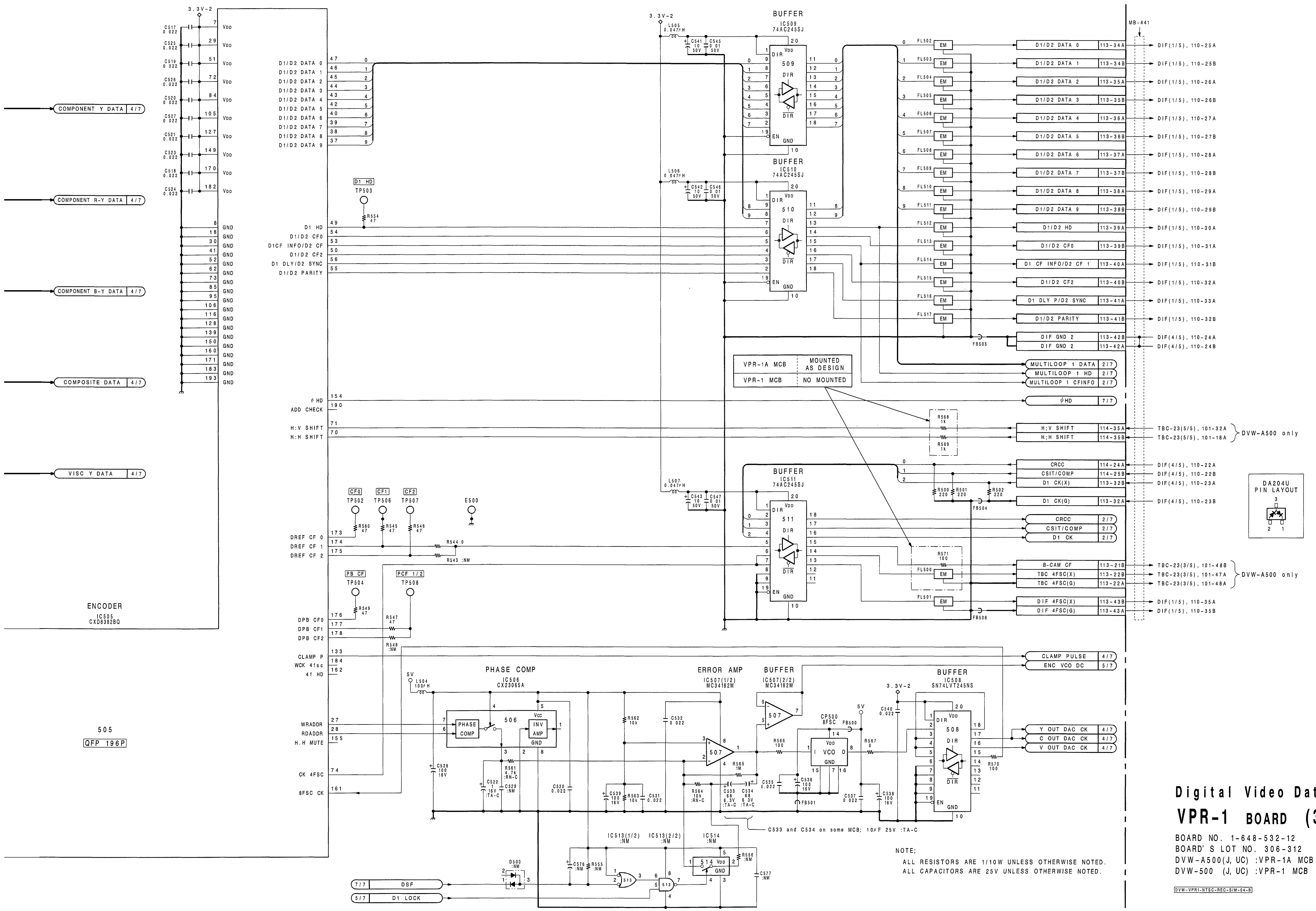

NOTE;
ALL RESISTORS ARE 1/10W UNLESS OTHERWISE NOTED.
ALL CAPACITORS ARE 25V UNLESS OTHERWISE NOTED.

Digital Video Data Encoder
VPR-1 BOARD (3/7)

BOARD NO. 1-648-532-12
BOARD'S LOT NO. 306-312
DVW-A500(J, UC) :VPR-1A MCB
DVW-500 (J, UC) :VPR-1 MCB

DVW-VPR1-NTSC-REC-S/M-04-B

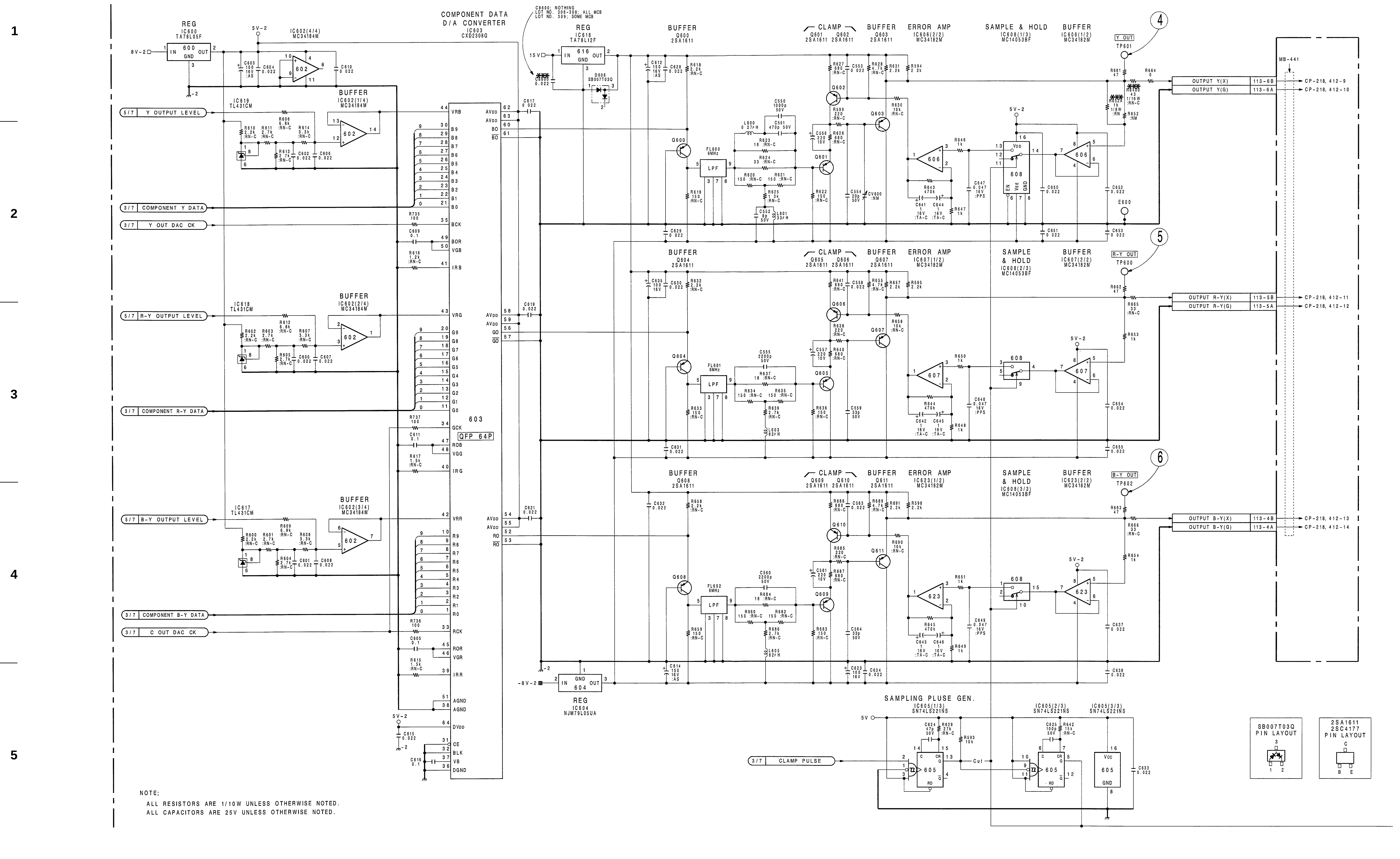
COMPONENT DATA
D/A CONVERTER
IC603
CXD2308Q
REG
IC600
TA78L05F
REG
IC616
TA78L12F
REG
IC604
NJM79L05UA
BUFFER
CLAMP
ERROR AMP
SAMPLE & HOLD
SAMPLING PLUSE GEN.
Y OUTPUT LEVEL
COMPONENT Y DATA
Y OUT DAC CK
R-Y OUTPUT LEVEL
COMPONENT R-Y DATA
B-Y OUTPUT LEVEL
COMPONENT B-Y DATA
C OUT DAC CK
CLAMP PULSE
OUTPUT Y(X)
OUTPUT Y(G)
OUTPUT R-Y(X)
OUTPUT R-Y(G)
OUTPUT B-Y(X)
OUTPUT B-Y(G)
MB-441
QFP 64P
SB007T03Q
PIN LAYOUT
2SA1611
2SC4177
PIN LAYOUT
NOTE;
ALL RESISTORS ARE 1/10W UNLESS OTHERWISE NOTED.
ALL CAPACITORS ARE 25V UNLESS OTHERWISE NOTED.

http://getMANUAL.com

 VPR-1 (4/7)

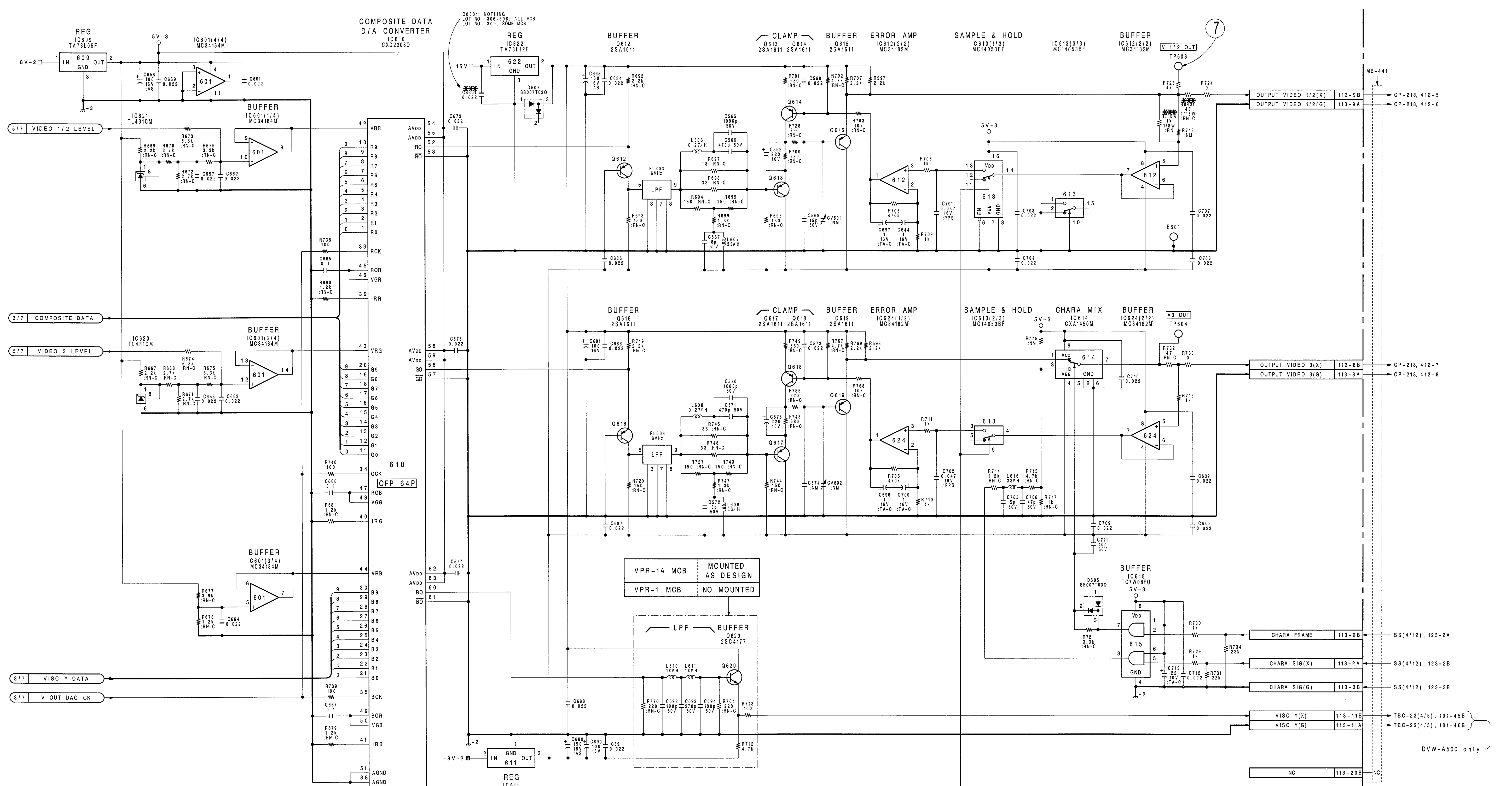

The Ref. Nos. marked with *** on the schematic diagram in this page are not printed on the printed circuit board (of the following board No.) with silk screen.

VPR-1 BOARD: 1-648-532-12

Output Video Signal D/A Converter

VPR-1 BOARD (4/7)

BOARD NO. 1-648-532-12
BOARD' S LOT NO. 306-312
DVW-A500(J, UC) :VPR-1A MCB
DVW-500 (J, UC) :VPR-1 MCB

DVW-VPR1-NTSC-REC-S/M-04-B

 1-13 (b)

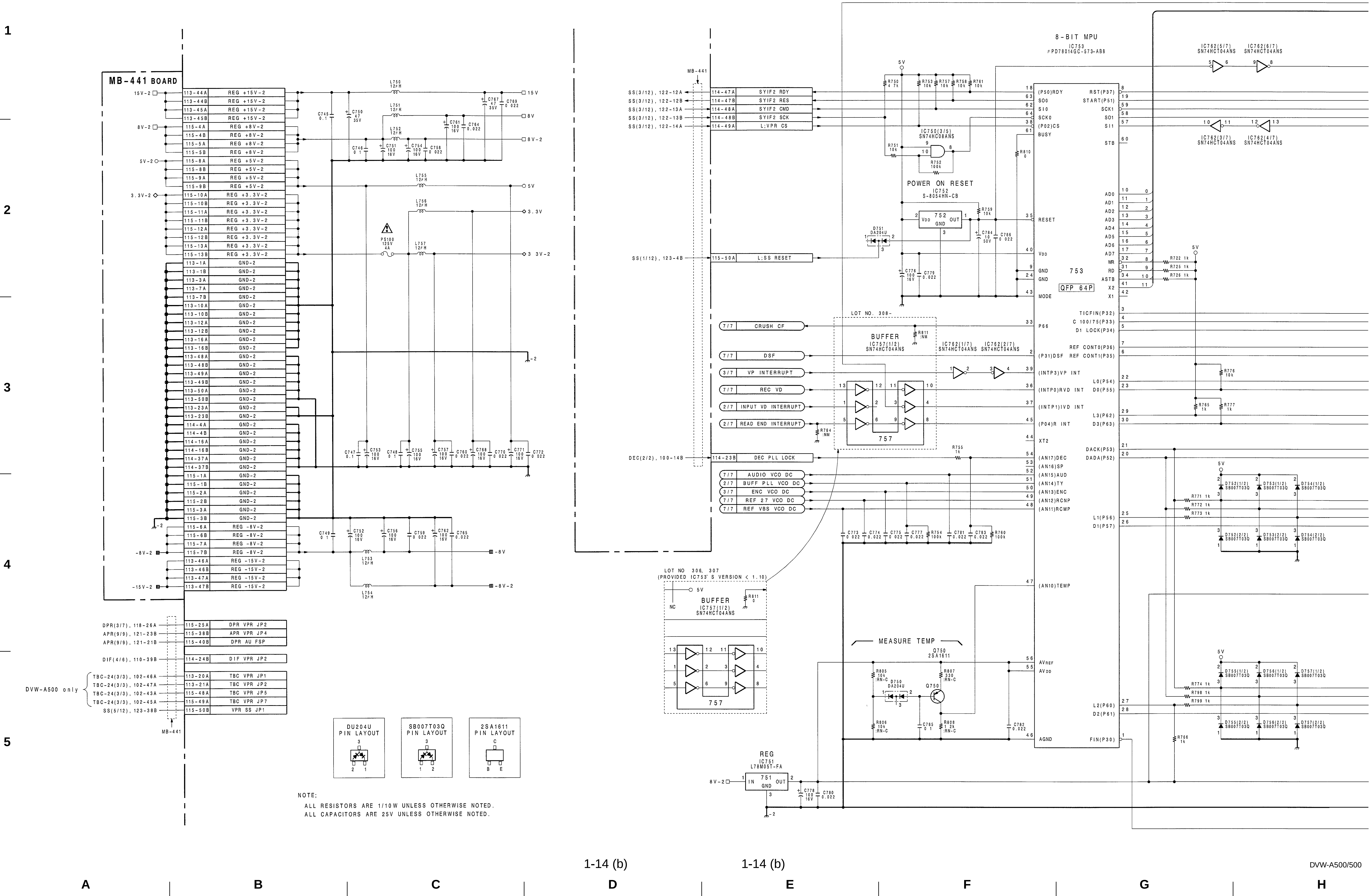
MB-441 BOARD
8-BIT MPU
IC753
POWER ON RESET
IC752
S-8054HN-CB
BUFFER
MEASURE TEMP
REG
IC751
L78M05T-FA
DU204U PIN LAYOUT
SB007T03Q PIN LAYOUT
2SA1611 PIN LAYOUT
NOTE;
ALL RESISTORS ARE 1/10W UNLESS OTHERWISE NOTED.
ALL CAPACITORS ARE 25V UNLESS OTHERWISE NOTED.

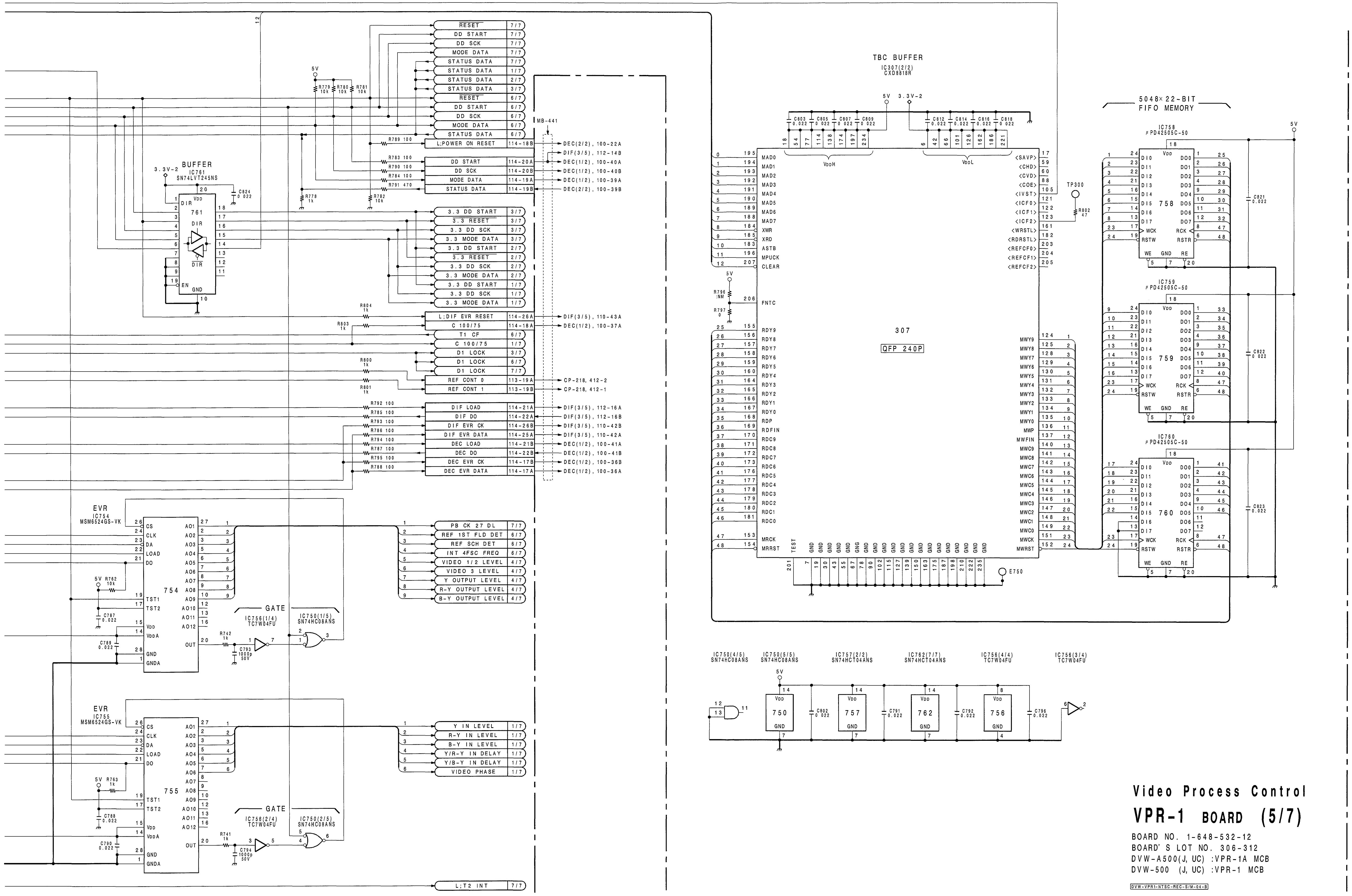

Video Process Control

VPR-1 BOARD (5/7)

BOARD NO. 1-648-532-12
BOARD' S LOT NO. 306-312
DVW-A500(J, UC) :VPR-1A MCB
DVW-500 (J, UC) :VPR-1 MCB

DVW-VPR1-NTSC-REC-SIM-04-B

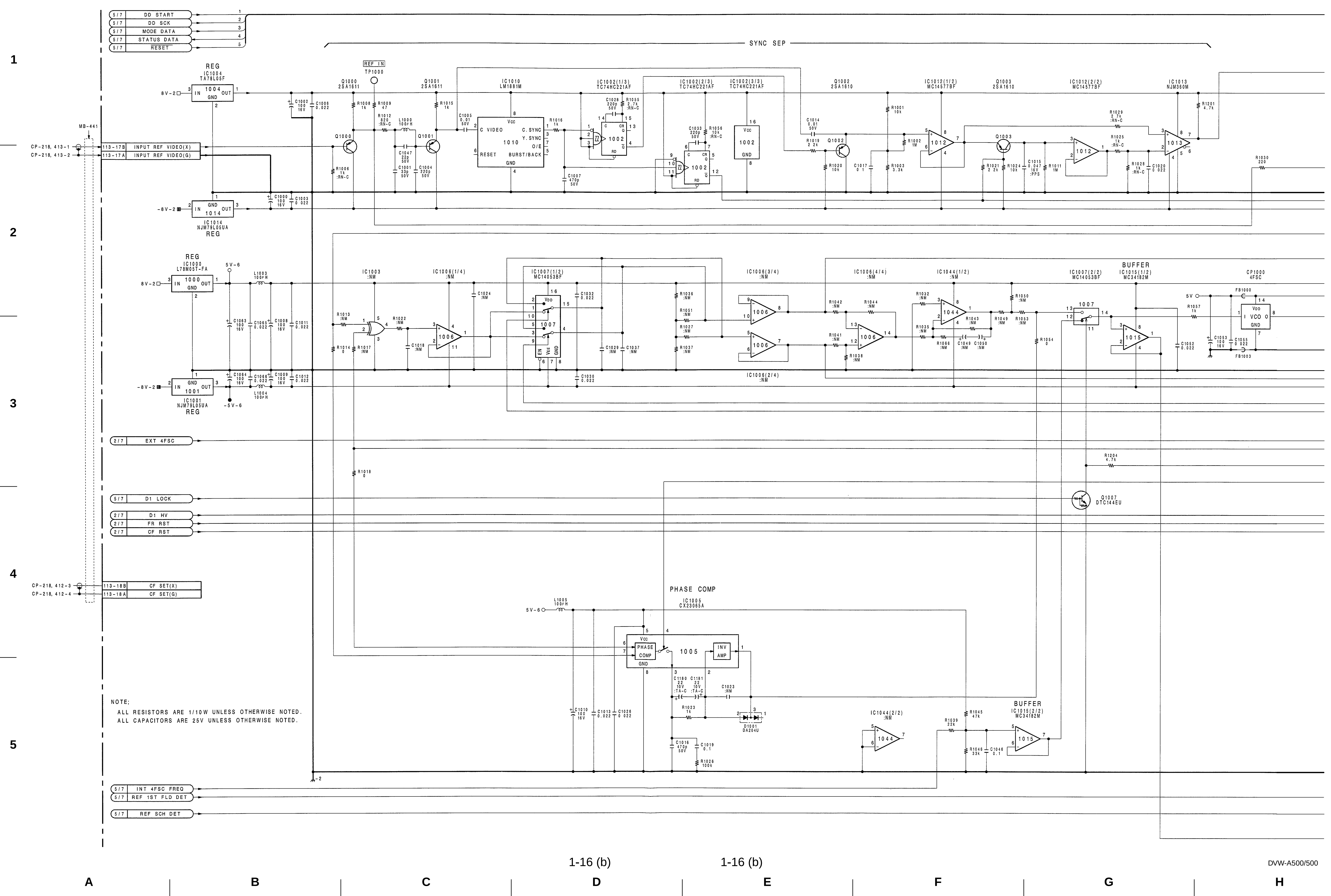
DD START
DD SCK
MODE DATA
STATUS DATA
RESET
SYNC SEP
REF IN
TP1000
REG
IC1004
TA78L05F
IC1014
NJM79L05UA
IC1010
LM1881M
C VIDEO
C. SYNC
Y. SYNC
O/E
RESET
BURST/BACK
IC1002(1/3)
TC74HC221AF
IC1002(2/3)
TC74HC221AF
IC1002(3/3)
TC74HC221AF
Q1000
2SA1611
Q1001
2SA1611
Q1002
2SA1610
Q1003
2SA1610
IC1012(1/2)
MC14577BF
IC1012(2/2)
MC14577BF
IC1013
NJM360M
MB-441
CP-218, 413-1
CP-218, 413-2
INPUT REF VIDEO(X)
INPUT REF VIDEO(G)
IC1000
L78M05T-FA
IC1001
NJM79L05UA
IC1003
:NM
IC1006(1/4)
:NM
IC1007(1/2)
MC14053BF
IC1006(3/4)
:NM
IC1006(2/4)
:NM
IC1006(4/4)
:NM
IC1044(1/2)
:NM
IC1007(2/2)
MC14053BF
BUFFER
IC1015(1/2)
MC34182M
CP1000
4FSC
VCO
EXT 4FSC
D1 LOCK
D1 HV
FR RST
CF RST
Q1007
DTC144EU
CP-218, 412-3
CP-218, 412-4
CF SET(X)
CF SET(G)
PHASE COMP
IC1005
CX23065A
PHASE COMP
INV AMP
D1001
DA204U
IC1044(2/2)
:NM
BUFFER
IC1015(2/2)
MC34182M
NOTE;
ALL RESISTORS ARE 1/10W UNLESS OTHERWISE NOTED.
ALL CAPACITORS ARE 25V UNLESS OTHERWISE NOTED.
INT 4FSC FREQ
REF 1ST FLD DET
REF SCH DET

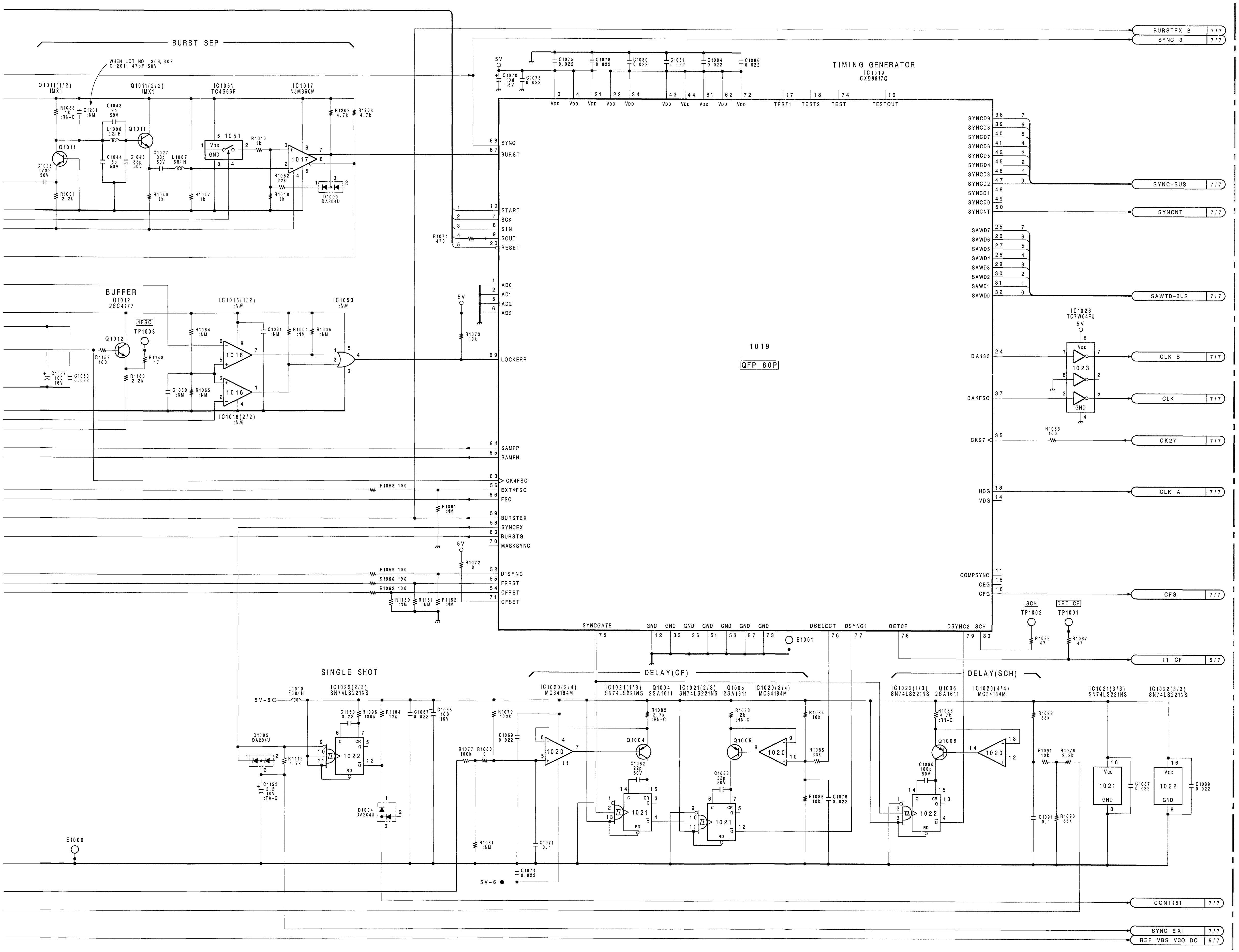

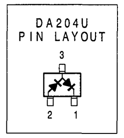

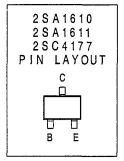

1
2
3
4
5

Time Ref Signal(1)

VPR-1 BOARD (6/7)

BOARD NO. 1-648-532-12
BOARD' S LOT NO. 306-312
DVW-A500(J, UC) :VPR-1A MCB
DVW-500 (J, UC) :VPR-1 MCB

DVW-VPR1-NTSC-REC-S/M-04-B

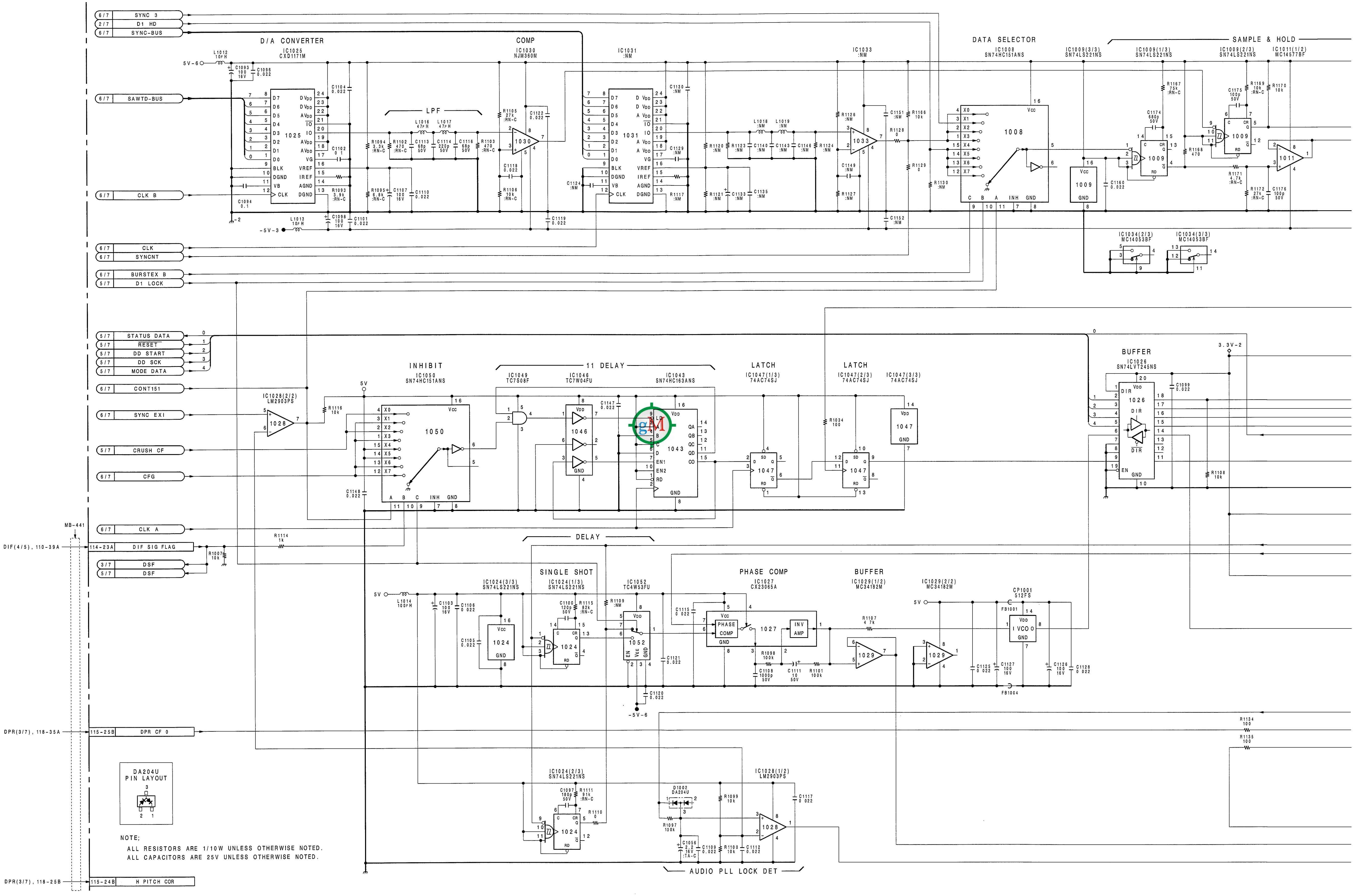
1
2
3
4
5
D/A CONVERTER
IC1025
CXD1171M
COMP
IC1030
NJM360M
IC1031
:NM
IC1033
:NM
DATA SELECTOR
IC1008
SN74HC151ANS
SAMPLE & HOLD
IC1009(3/3)
SN74LS221NS
IC1009(1/3)
SN74LS221NS
IC1009(2/3)
SN74LS221NS
IC1011(1/2)
MC14577BF
LPF
IC1034(2/3)
MC14053BF
IC1034(3/3)
MC14053BF
SYNC 3
D1 HD
SYNC-BUS
SAWTD-BUS
CLK B
CLK
SYNCNT
BURSTEX B
D1 LOCK
STATUS DATA
RESET
DD START
DD SCK
MODE DATA
CONT151
SYNC EXI
CRUSH CF
CFG
CLK A
DIF SIG FLAG
DSF
DSF
DPR CF 0
H PITCH COR
INHIBIT
IC1050
SN74HC151ANS
IC1028(2/2)
LM2903PS
11 DELAY
IC1049
TC7S08F
IC1046
TC7W04FU
IC1043
SN74HC163ANS
LATCH
IC1047(1/3)
74AC74SJ
LATCH
IC1047(2/3)
74AC74SJ
IC1047(3/3)
74AC74SJ
BUFFER
IC1026
SN74LVT245NS
DELAY
SINGLE SHOT
IC1024(3/3)
SN74LS221NS
IC1024(1/3)
SN74LS221NS
IC1052
TC4W53FU
PHASE COMP
IC1027
CX23065A
BUFFER
IC1029(1/2)
MC34182M
IC1029(2/2)
MC34182M
CP1001
512FS
IC1024(2/3)
SN74LS221NS
IC1028(1/2)
LM2903PS
D1002
DA204U
AUDIO PLL LOCK DET
DA204U
PIN LAYOUT
NOTE;
ALL RESISTORS ARE 1/10W UNLESS OTHERWISE NOTED.
ALL CAPACITORS ARE 25V UNLESS OTHERWISE NOTED.
MB-441
DIF(4/5), 110-39A
DPR(3/7), 118-35A
DPR(3/7), 118-25B

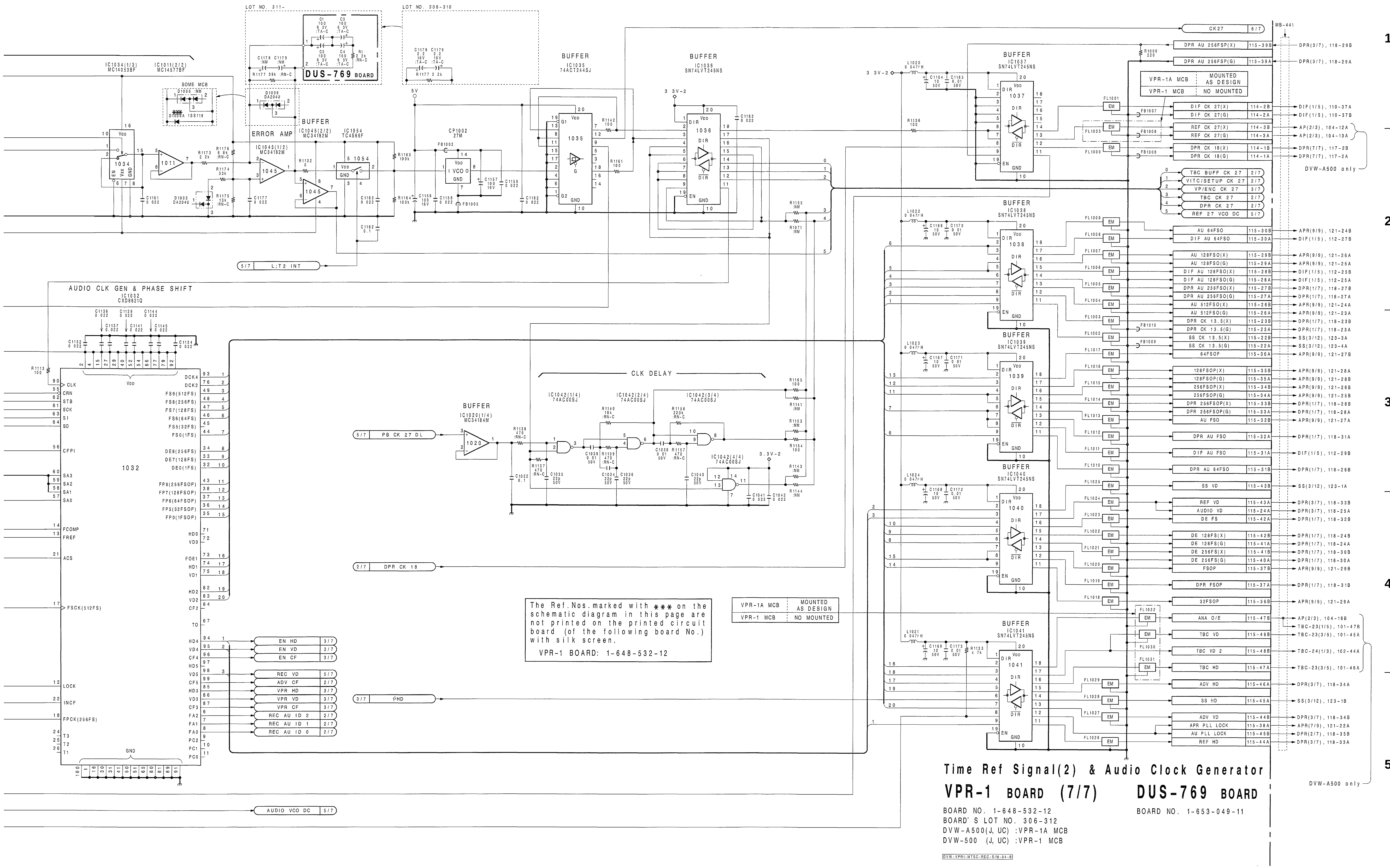
AUDIO CLK GEN & PHASE SHIFT
CLK DELAY
ERROR AMP
BUFFER
DUS-769 BOARD
LOT NO. 311-
LOT NO. 306-310
The Ref.Nos.marked with ✱✱✱ on the schematic diagram in this page are not printed on the printed circuit board (of the following board No.) with silk screen.
VPR-1 BOARD: 1-648-532-12
VPR-1A MCB | MOUNTED AS DESIGN
VPR-1 MCB | NO MOUNTED
DVW-A500 only
Time Ref Signal(2) & Audio Clock Generator
VPR-1 BOARD (7/7)
DUS-769 BOARD
BOARD NO. 1-648-532-12
BOARD' S LOT NO. 306-312
DVW-A500(J, UC) :VPR-1A MCB
DVW-500 (J, UC) :VPR-1 MCB
BOARD NO. 1-653-049-11

 VPR-1 (1/7)

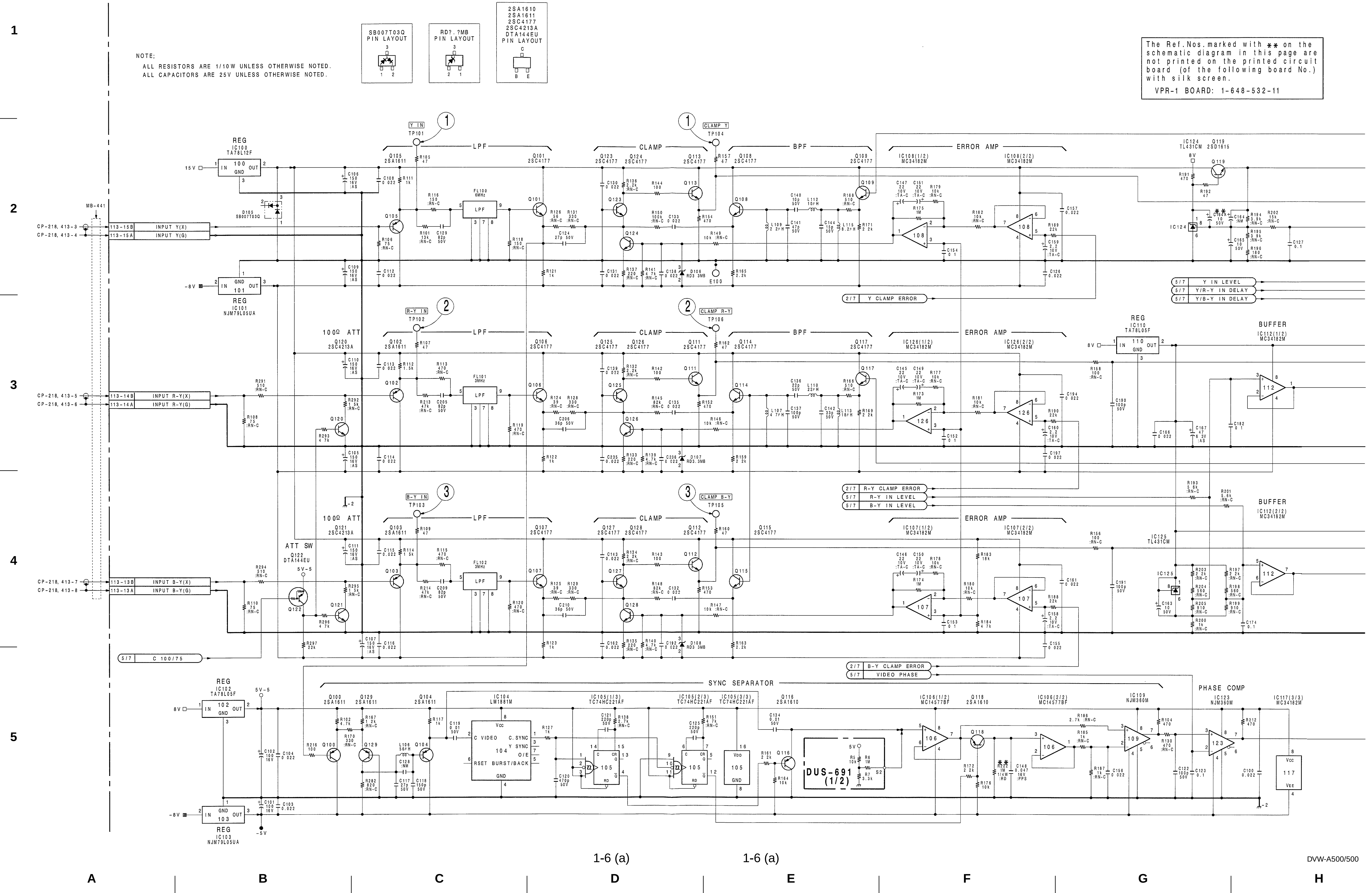
NOTE;
ALL RESISTORS ARE 1/10W UNLESS OTHERWISE NOTED.
ALL CAPACITORS ARE 25V UNLESS OTHERWISE NOTED.
SB007T03Q PIN LAYOUT
RD?.?MB PIN LAYOUT
2SA1610 2SA1611 2SC4177 2SC4213A DTA144EU PIN LAYOUT
The Ref.Nos.marked with ✱✱ on the schematic diagram in this page are not printed on the printed circuit board (of the following board No.) with silk screen.
VPR-1 BOARD: 1-648-532-11
REG IC100 TA78L12F
REG IC101 NJM79L05UA
REG IC102 TA78L05F
REG IC103 NJM79L05UA
REG IC110 TA78L05F
LPF
CLAMP
BPF
ERROR AMP
BUFFER IC112(1/2) MC34182M
BUFFER IC112(2/2) MC34182M
100Ω ATT
ATT SW
SYNC SEPARATOR
PHASE COMP
INPUT Y(X)
INPUT Y(G)
INPUT R-Y(X)
INPUT R-Y(G)
INPUT B-Y(X)
INPUT B-Y(G)
Y IN
CLAMP Y
R-Y IN
CLAMP R-Y
B-Y IN
CLAMP B-Y
2/7 Y CLAMP ERROR
5/7 Y IN LEVEL
5/7 Y/R-Y IN DELAY
5/7 Y/B-Y IN DELAY
2/7 R-Y CLAMP ERROR
5/7 R-Y IN LEVEL
5/7 B-Y IN LEVEL
2/7 B-Y CLAMP ERROR
5/7 VIDEO PHASE
5/7 C 100/75
IC104 LM1881M
C VIDEO C.SYNC Y SYNC O/E RSET BURST/BACK
IC105 TC74HC221AF
IC106 MC14577BF
IC109 NJM360M
IC123 NJM360M
IC117(3/3) MC34182M
IC124 TL431CM
IC125 TL431CM
DUS-691 (1/2)
MB-441
CP-218, 413-3
CP-218, 413-4
CP-218, 413-5
CP-218, 413-6
CP-218, 413-7
CP-218, 413-8
15V
-8V
8V
5V-5
1
2
3
4
5
A
B
C
D
E
F
G
H

 1-6 (a)

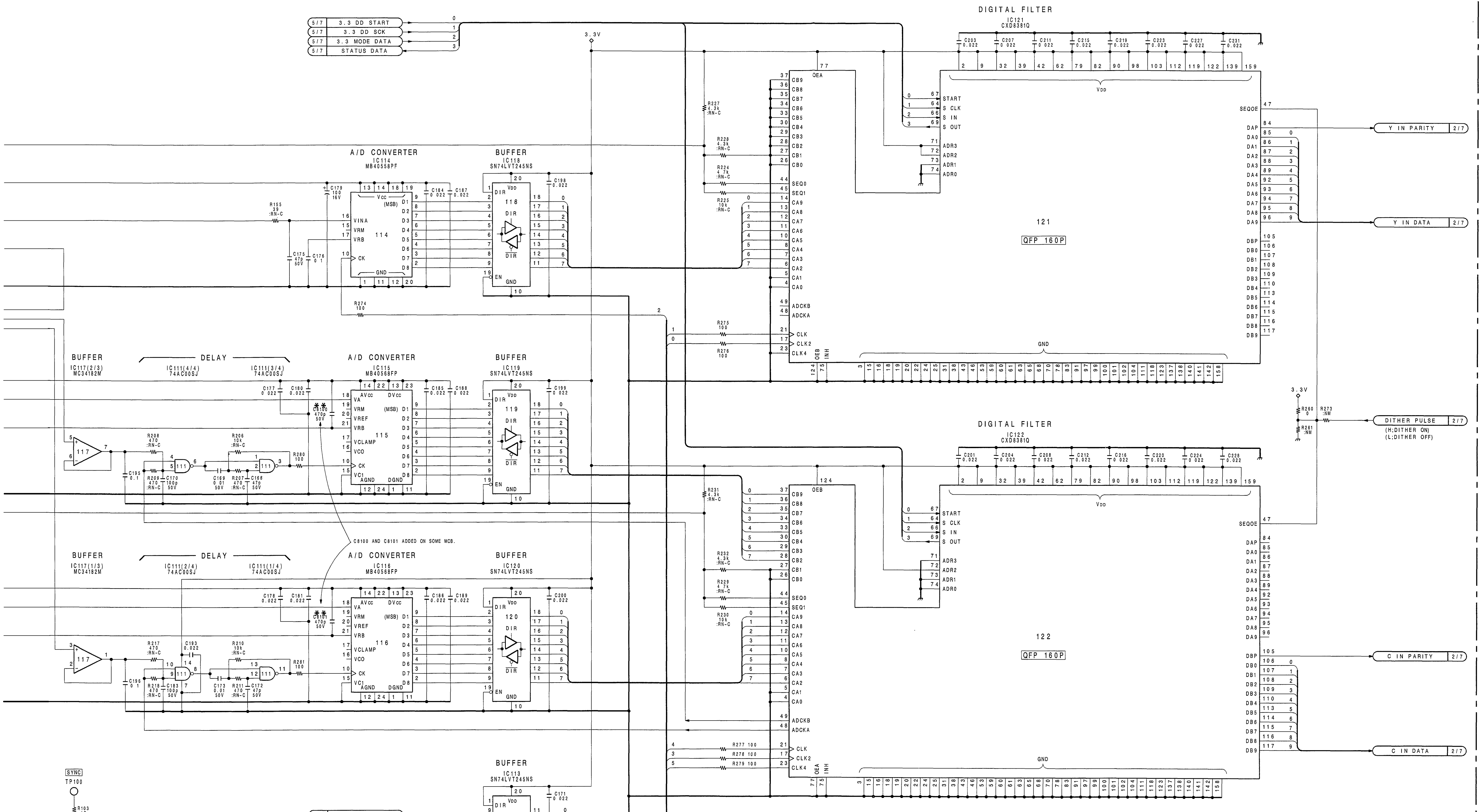

Component Video A/D Converter & SYNC Separator

VPR-1 BOARD (1/7) **DUS-691 BOARD (1/2)**

BOARD NO. 1-648-532-11
BOARD' S LOT NO. 303-306
DVW-A500(J, UC) :VPR-1A MCB
DVW-500 (J, UC) :VPR-1 MCB

BOARD NO. 1-649-616-11

DVW-VPR1-NTSC-REC-S/M-04-A

1
2
3
4
5

I J K L M N O P

1
2
3
4
5

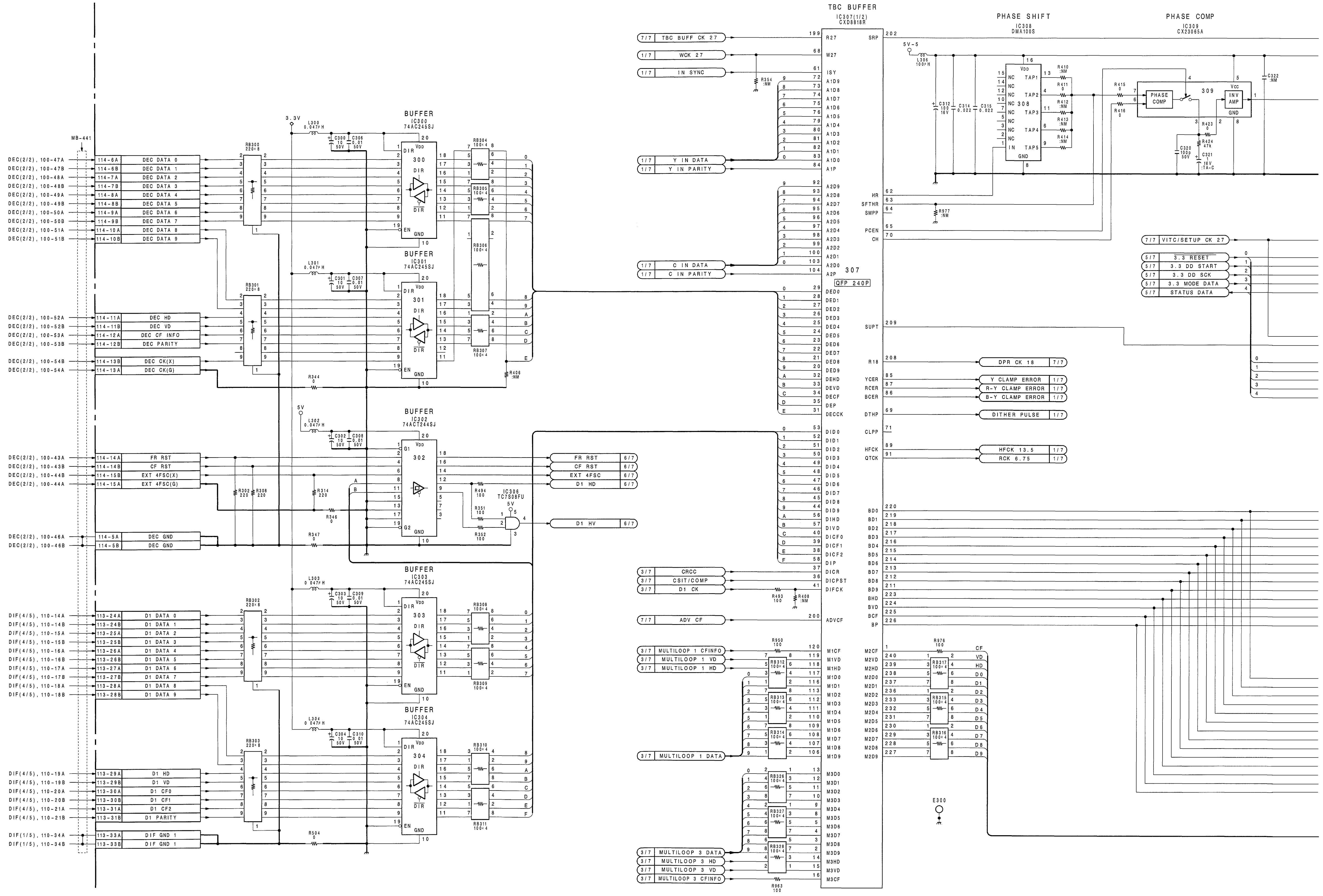

A B C D E F G H

http://getMANUAL.com

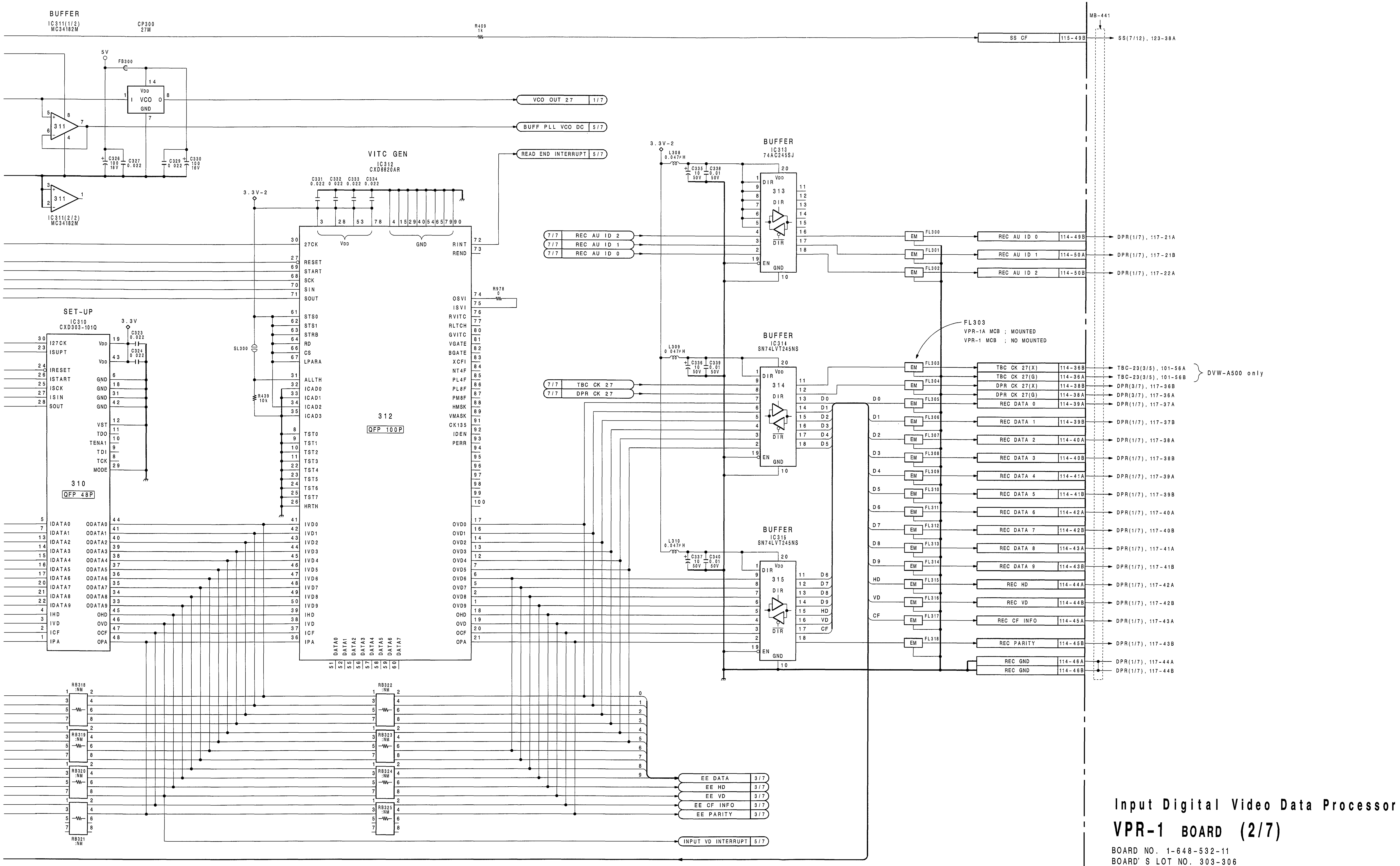

NOTE;
ALL RESISTORS ARE 1/10W UNLESS OTHERWISE NOTED.
ALL CAPACITORS ARE 25V UNLESS OTHERWISE NOTED.

Input Digital Video Data Processor

VPR-1 BOARD (2/7)

BOARD NO. 1-648-532-11
BOARD' S LOT NO. 303-306
DVW-A500(J, UC) :VPR-1A MCB
DVW-500 (J, UC) :VPR-1 MCB

DVW-VPR1-NTSC-REC-S/M-04-A

 VPR-1 (3/7)

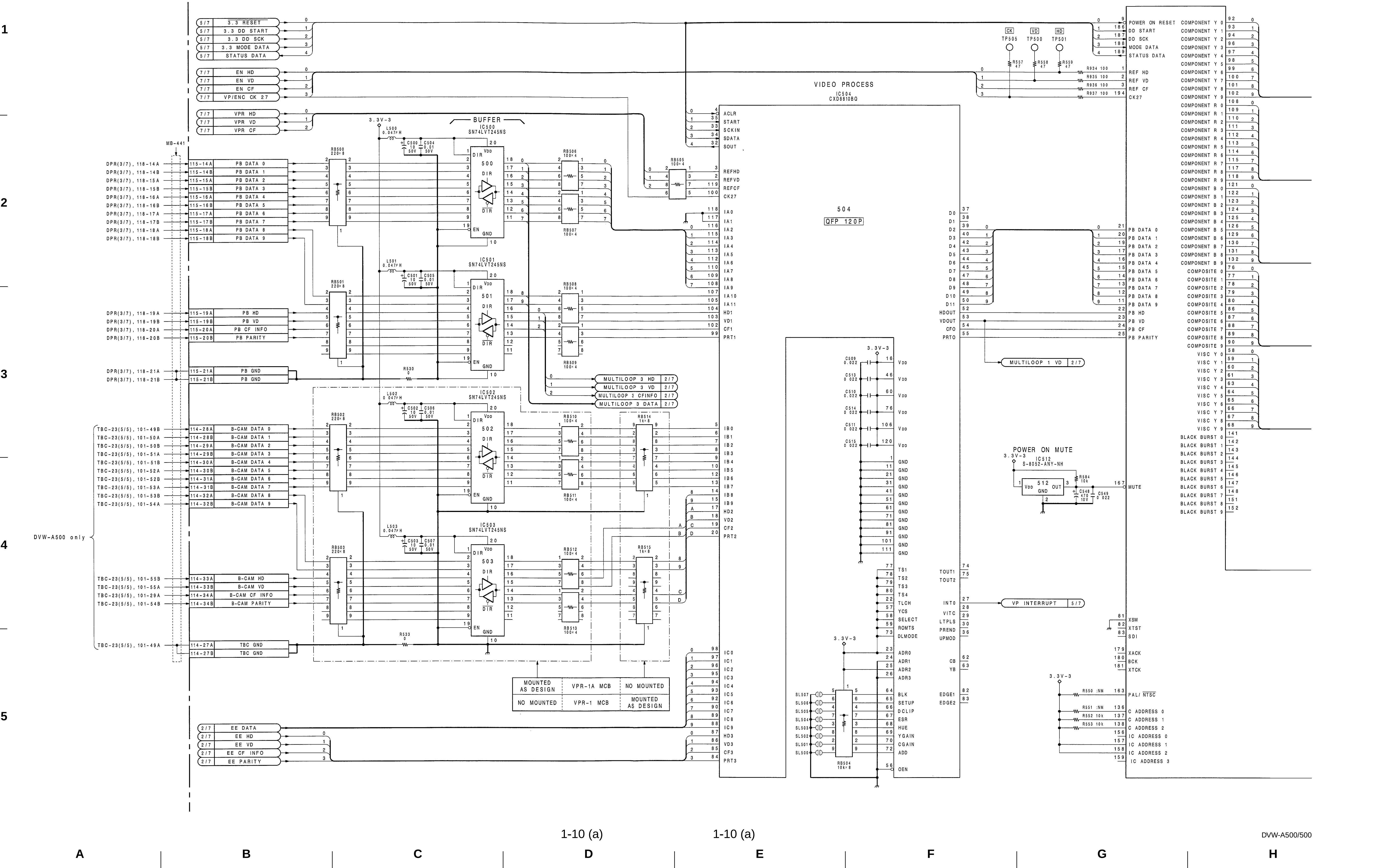
VIDEO PROCESS
IC504
CXD8810BQ
504
QFP 120P
BUFFER
IC500
SN74LVT245NS
IC501
SN74LVT245NS
IC502
SN74LVT245NS
IC503
SN74LVT245NS
POWER ON MUTE
IC512
S-8052-ANY-NH
MB-441
DVW-A500 only
MOUNTED AS DESIGN
VPR-1A MCB
NO MOUNTED
NO MOUNTED
VPR-1 MCB
MOUNTED AS DESIGN

 VPR-1 (3/7)

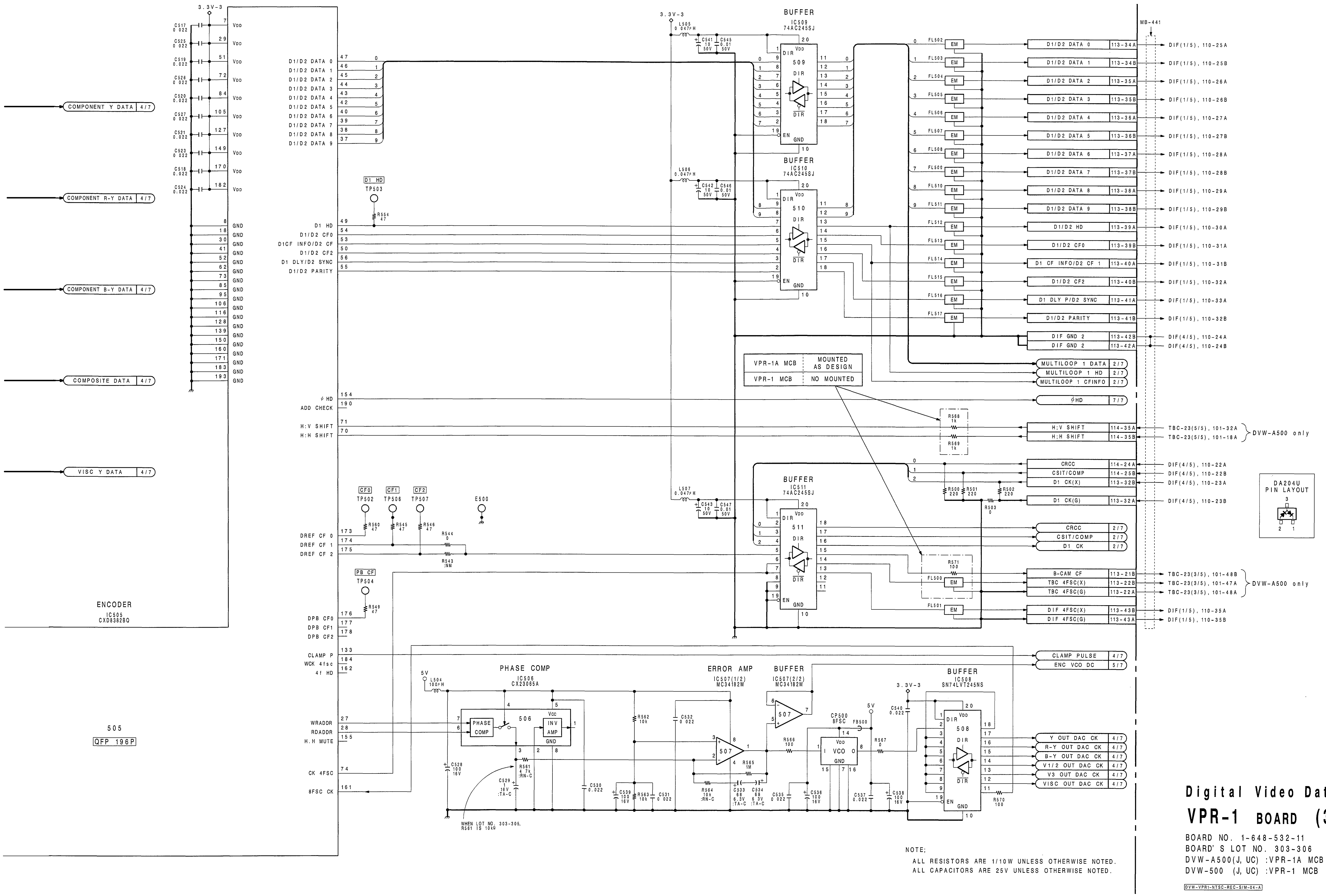

Digital Video Data Encoder
VPR-1 BOARD (3/7)

BOARD NO. 1-648-532-11
BOARD' S LOT NO. 303-306
DVW-A500(J, UC) :VPR-1A MCB
DVW-500 (J, UC) :VPR-1 MCB

NOTE;
ALL RESISTORS ARE 1/10W UNLESS OTHERWISE NOTED.
ALL CAPACITORS ARE 25V UNLESS OTHERWISE NOTED.

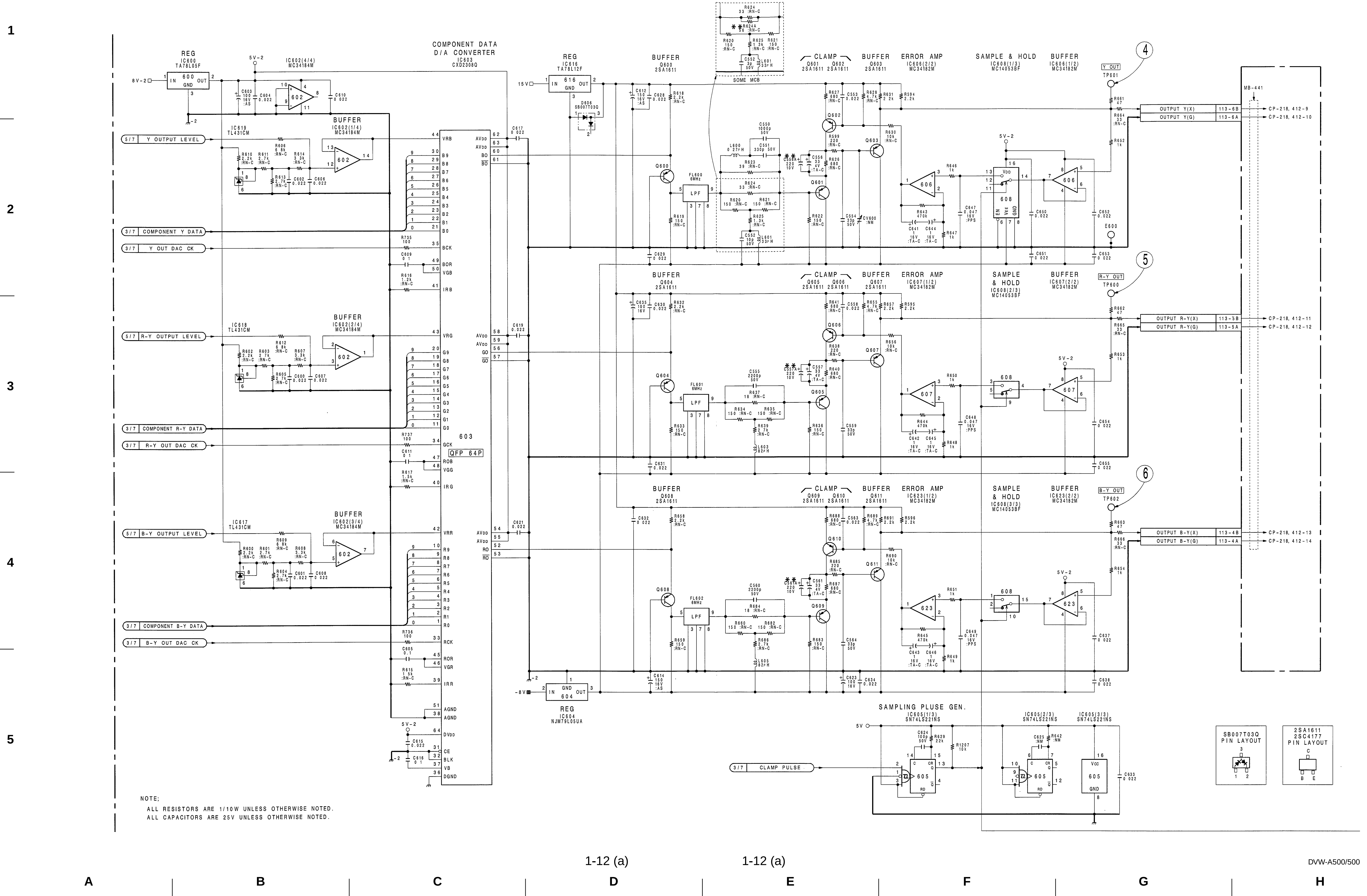

REG
IC600
TA78L05F
COMPONENT DATA
D/A CONVERTER
IC603
CXD2308Q
REG
IC616
TA78L12F
BUFFER
Q600
2SA1611
CLAMP
Q601 Q602
2SA1611 2SA1611
BUFFER
Q603
2SA1611
ERROR AMP
IC606(2/2)
MC34182M
SAMPLE & HOLD
IC608(1/3)
MC14053BF
BUFFER
IC606(1/2)
MC34182M
Y OUT
TP601
SOME MCB
5/7 Y OUTPUT LEVEL
3/7 COMPONENT Y DATA
3/7 Y OUT DAC CK
5/7 R-Y OUTPUT LEVEL
3/7 COMPONENT R-Y DATA
3/7 R-Y OUT DAC CK
5/7 B-Y OUTPUT LEVEL
3/7 COMPONENT B-Y DATA
3/7 B-Y OUT DAC CK
IC619
TL431CM
IC618
TL431CM
IC617
TL431CM
BUFFER
IC602(1/4)
MC34184M
BUFFER
IC602(2/4)
MC34184M
BUFFER
IC602(3/4)
MC34184M
603
QFP 64P
BUFFER
Q604
2SA1611
CLAMP
Q605 Q606
2SA1611 2SA1611
BUFFER
Q607
2SA1611
ERROR AMP
IC607(1/2)
MC34182M
SAMPLE & HOLD
IC608(2/3)
MC14053BF
BUFFER
IC607(2/2)
MC34182M
R-Y OUT
TP600
BUFFER
Q608
2SA1611
CLAMP
Q609 Q610
2SA1611 2SA1611
BUFFER
Q611
2SA1611
ERROR AMP
IC623(1/2)
MC34182M
SAMPLE & HOLD
IC608(3/3)
MC14053BF
BUFFER
IC623(2/2)
MC34182M
B-Y OUT
TP602
OUTPUT Y(X) 113-6B CP-218, 412-9
OUTPUT Y(G) 113-6A CP-218, 412-10
OUTPUT R-Y(X) 113-5B CP-218, 412-11
OUTPUT R-Y(G) 113-5A CP-218, 412-12
OUTPUT B-Y(X) 113-4B CP-218, 412-13
OUTPUT B-Y(G) 113-4A CP-218, 412-14
MB-441
REG
IC604
NJM79L05UA
SAMPLING PLUSE GEN.
IC605(1/3)
SN74LS221NS
IC605(2/3)
SN74LS221NS
IC605(3/3)
SN74LS221NS
3/7 CLAMP PULSE
SB007T03Q
PIN LAYOUT
2SA1611
2SC4177
PIN LAYOUT
NOTE;
ALL RESISTORS ARE 1/10W UNLESS OTHERWISE NOTED.
ALL CAPACITORS ARE 25V UNLESS OTHERWISE NOTED.
1
2
3
4
5
A
B
C
D
E
F
G
H

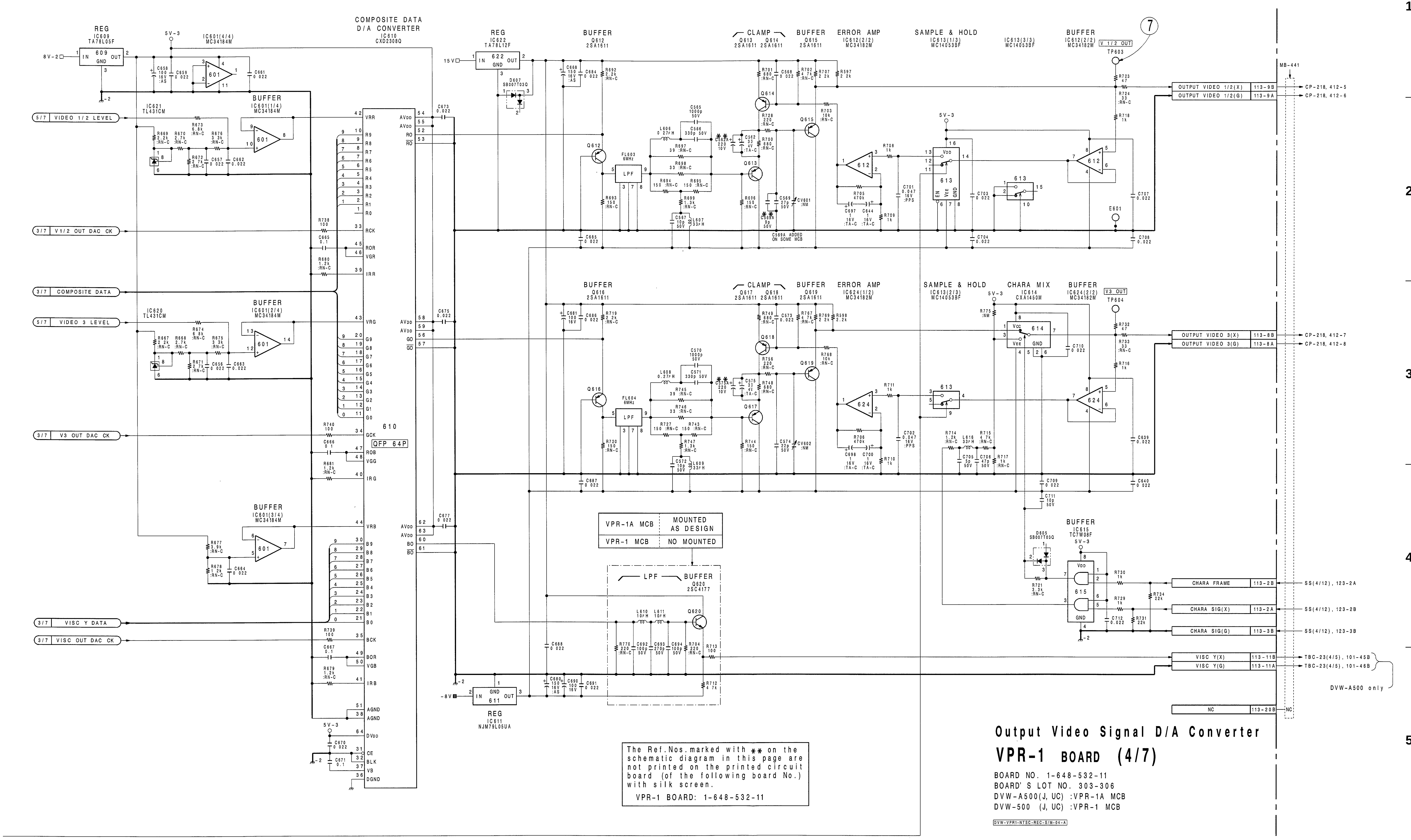

VPR-1A MCB	MOUNTED AS DESIGN
VPR-1 MCB	NO MOUNTED

The Ref.Nos.marked with ** on the schematic diagram in this page are not printed on the printed circuit board (of the following board No.) with silk screen.

VPR-1 BOARD: 1-648-532-11

Output Video Signal D/A Converter

VPR-1 BOARD (4/7)

BOARD NO. 1-648-532-11
BOARD' S LOT NO. 303-306
DVW-A500(J, UC) :VPR-1A MCB
DVW-500 (J, UC) :VPR-1 MCB

DVW-VPR1-NTSC-REC-S/M-04-A

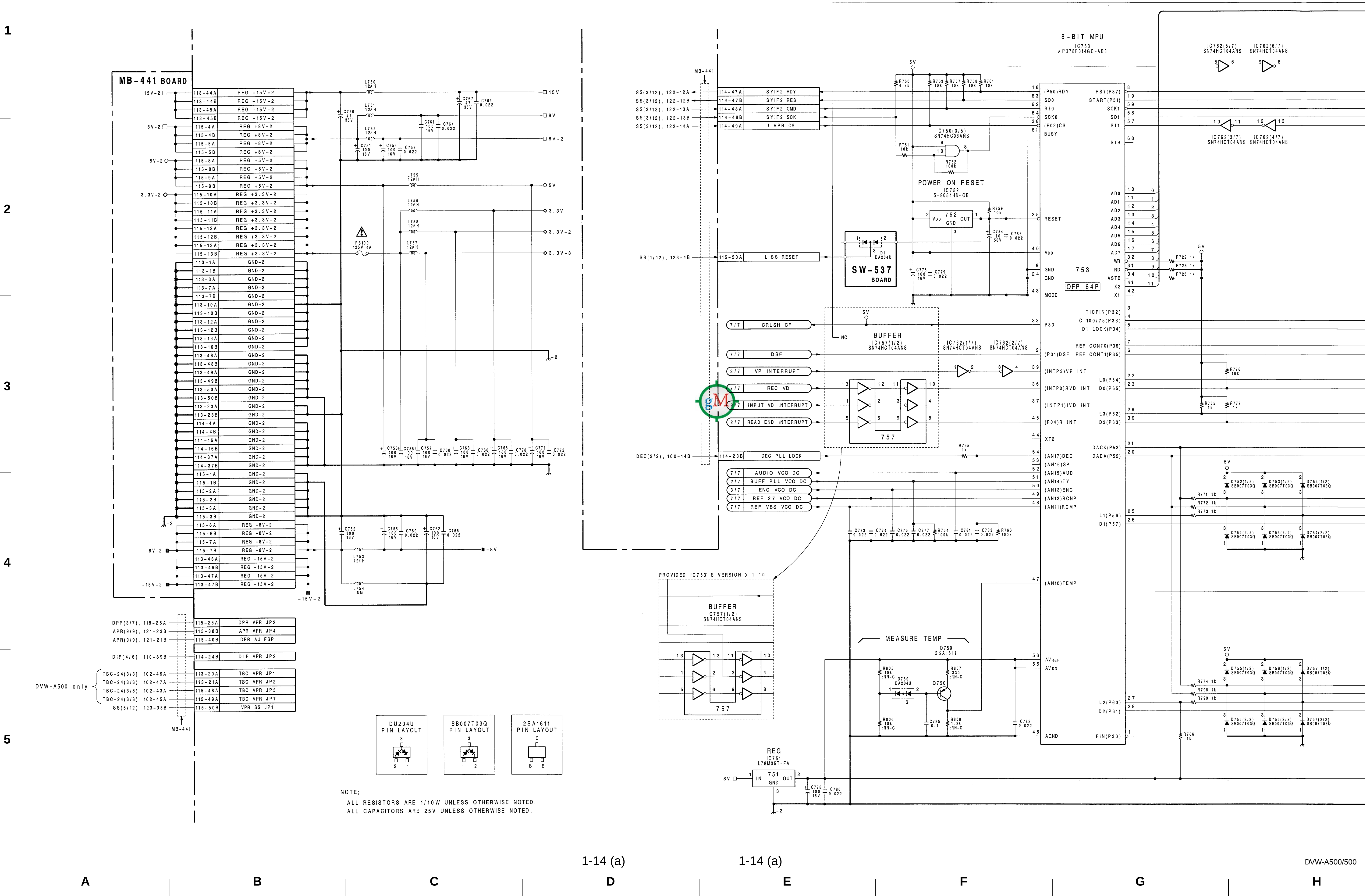
MB-441 BOARD
8-BIT MPU
IC753
753
QFP 64P
POWER ON RESET
IC752
S-8054HN-CB
SW-537
BOARD
BUFFER
IC757(1/2)
SN74HCT04ANS
757
PROVIDED IC753' S VERSION > 1.10
MEASURE TEMP
Q750
2SA1611
REG
IC751
L78M05T-FA
DU204U
PIN LAYOUT
SB007T03Q
PIN LAYOUT
2SA1611
PIN LAYOUT
DVW-A500 only
NOTE;
ALL RESISTORS ARE 1/10W UNLESS OTHERWISE NOTED.
ALL CAPACITORS ARE 25V UNLESS OTHERWISE NOTED.

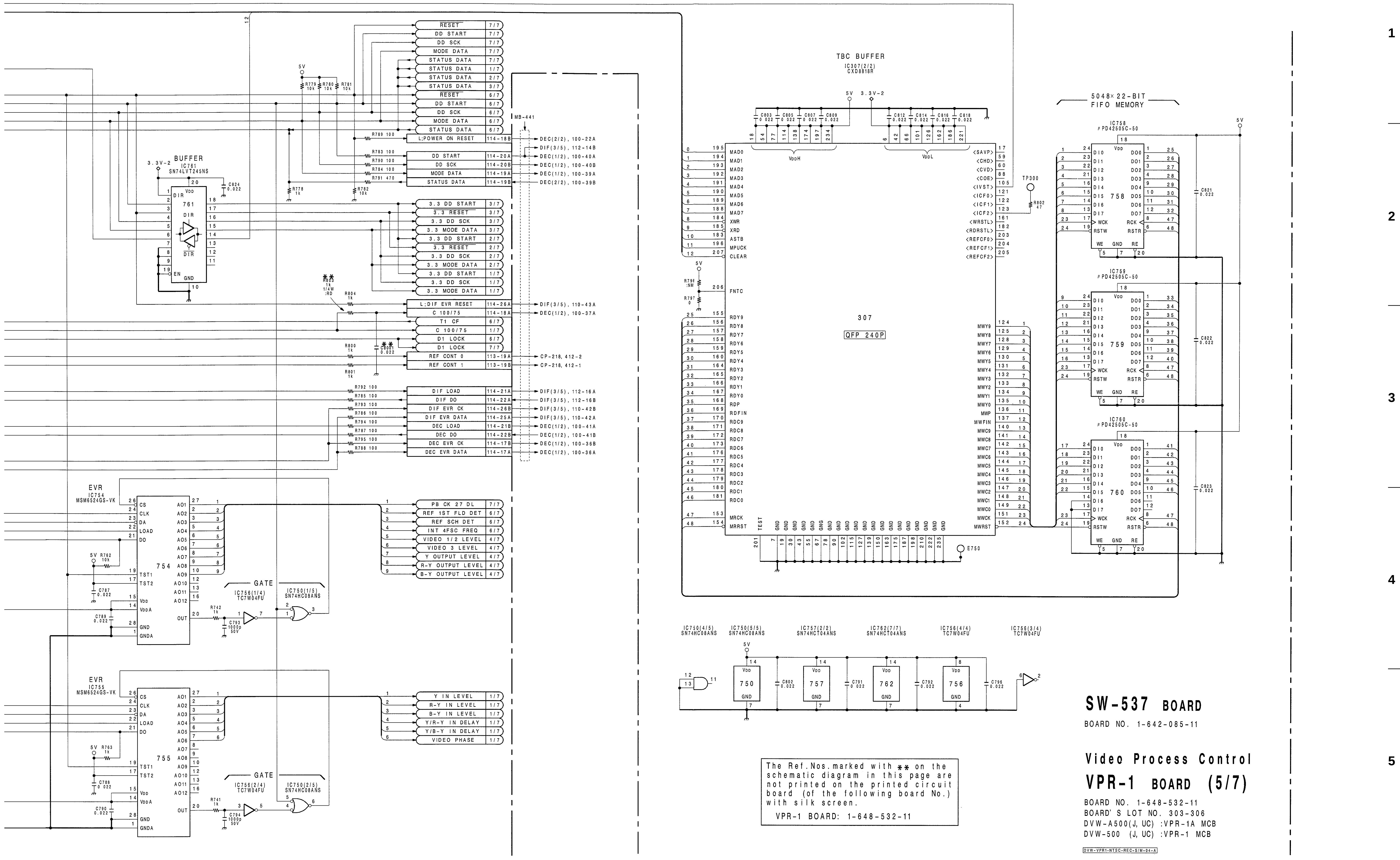
TBC BUFFER
IC307(2/2)
CXD8818R
5048× 22-BIT
FIFO MEMORY
IC758
IC759
IC760
μPD42505C-50
BUFFER
IC761
SN74LVT245NS
EVR
IC754
MSM6524GS-VK
EVR
IC755
MSM6524GS-VK
GATE
IC756(1/4)
TC7W04FU
IC750(1/5)
SN74HC08ANS
GATE
IC756(2/4)
TC7W04FU
IC750(2/5)
SN74HC08ANS
MB-441
QFP 240P
RESET
DD START
DD SCK
MODE DATA
STATUS DATA
L;POWER ON RESET
3.3 DD START
3.3 RESET
3.3 DD SCK
3.3 MODE DATA
L;DIF EVR RESET
C 100/75
T1 CF
D1 LOCK
REF CONT 0
REF CONT 1
DIF LOAD
DIF DO
DIF EVR CK
DIF EVR DATA
DEC LOAD
DEC DO
DEC EVR CK
DEC EVR DATA
PB CK 27 DL
REF 1ST FLD DET
REF SCH DET
INT 4FSC FREQ
VIDEO 1/2 LEVEL
VIDEO 3 LEVEL
Y OUTPUT LEVEL
R-Y OUTPUT LEVEL
B-Y OUTPUT LEVEL
Y IN LEVEL
R-Y IN LEVEL
B-Y IN LEVEL
Y/R-Y IN DELAY
Y/B-Y IN DELAY
VIDEO PHASE
IC750(4/5) SN74HC08ANS
IC750(5/5) SN74HC08ANS
IC757(2/2) SN74HCT04ANS
IC762(7/7) SN74HCT04ANS
IC756(4/4) TC7W04FU
IC756(3/4) TC7W04FU
The Ref.Nos.marked with ✱✱ on the schematic diagram in this page are not printed on the printed circuit board (of the following board No.) with silk screen.
VPR-1 BOARD: 1-648-532-11
SW-537 BOARD
BOARD NO. 1-642-085-11
Video Process Control
VPR-1 BOARD (5/7)
BOARD NO. 1-648-532-11
BOARD'S LOT NO. 303-306
DVW-A500(J, UC) :VPR-1A MCB
DVW-500 (J, UC) :VPR-1 MCB
DVW-VPR1-NTSC-REC-S/M-04-A
1
2
3
4
5

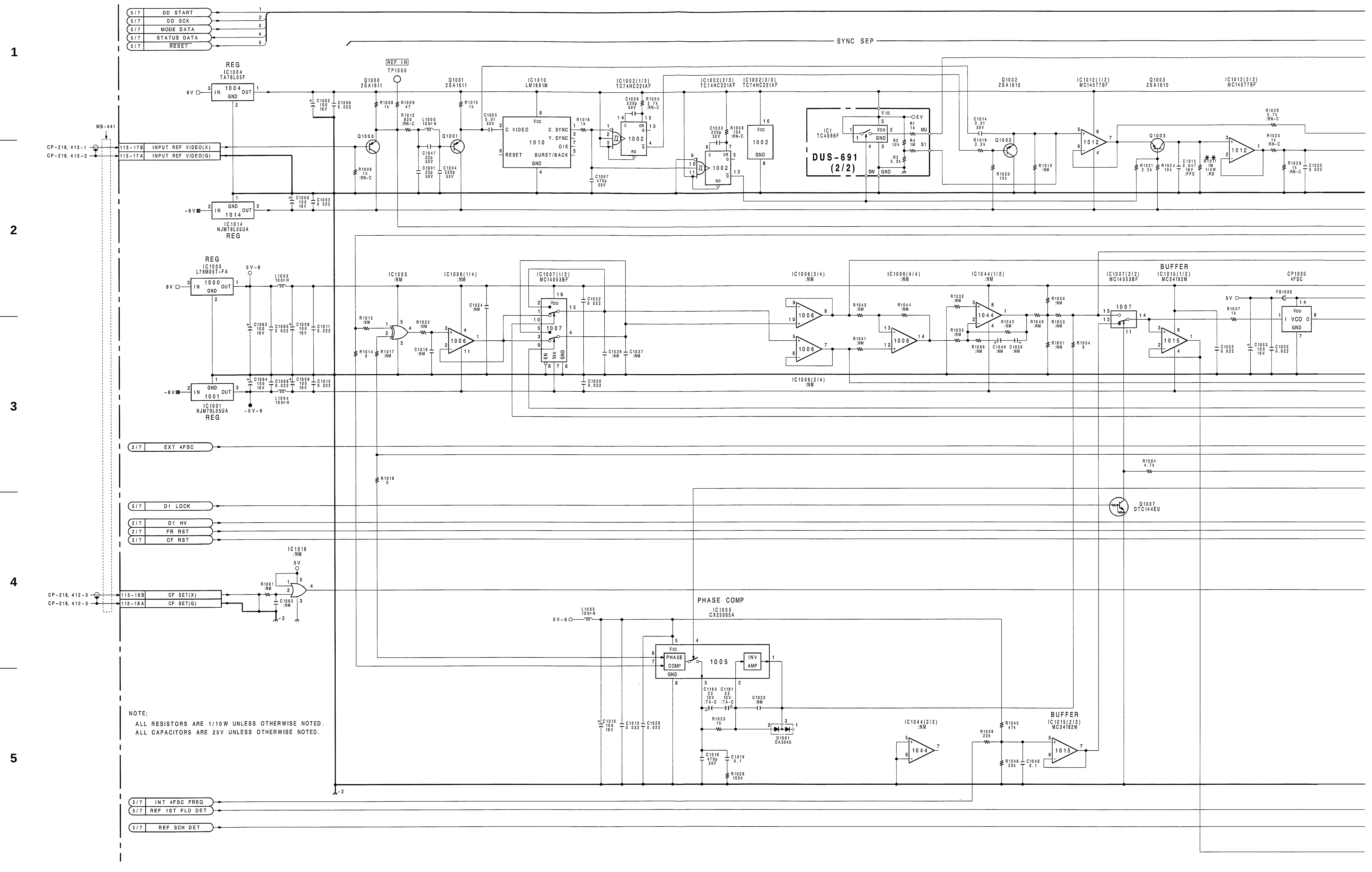

NOTE;
ALL RESISTORS ARE 1/10W UNLESS OTHERWISE NOTED.
ALL CAPACITORS ARE 25V UNLESS OTHERWISE NOTED.

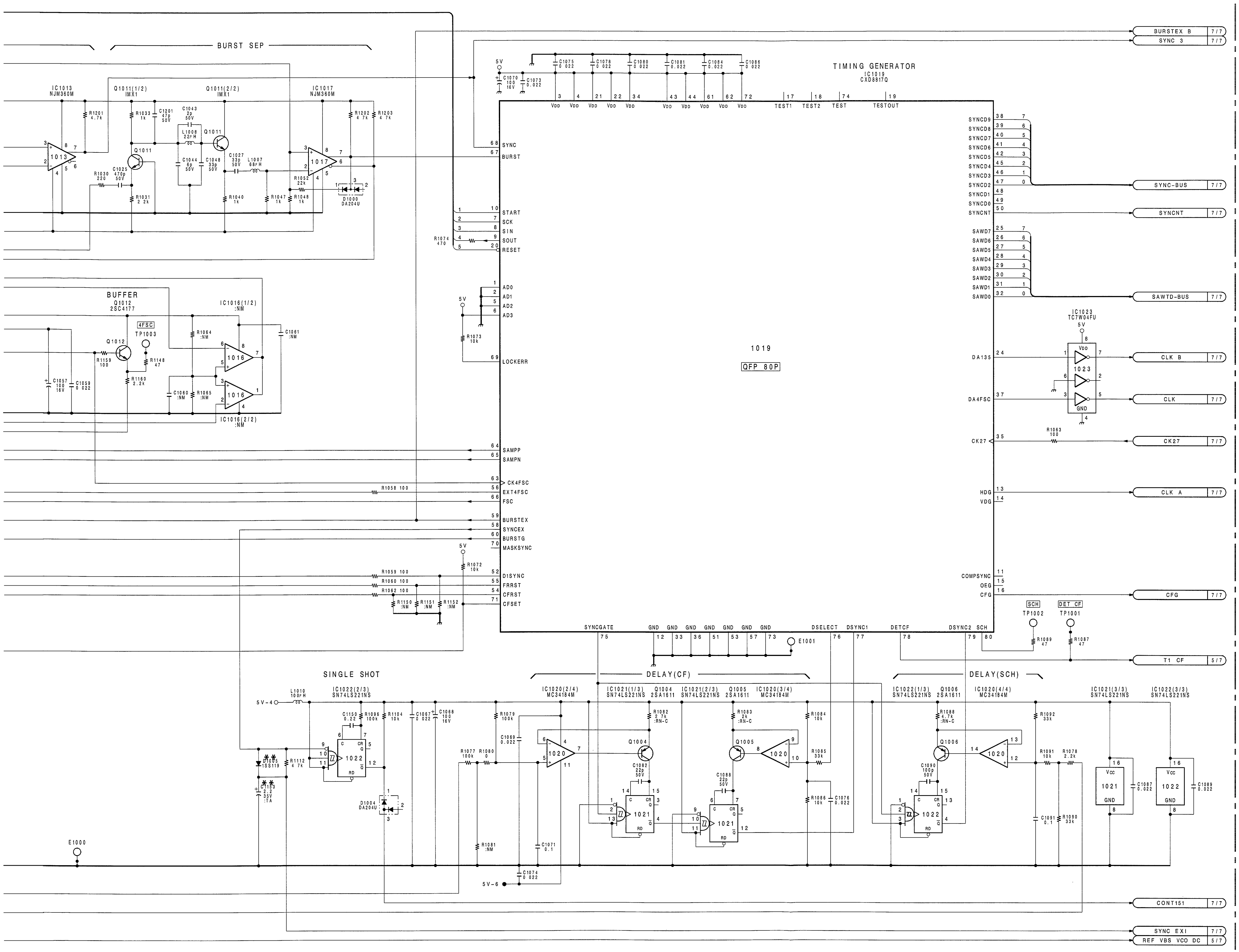

The Ref.Nos.marked with ** on the schematic diagram in this page are not printed on the printed circuit board (of the following board No.) with silk screen.

VPR-1 BOARD: 1-648-532-11

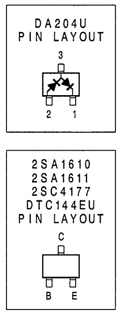

DUS-691 BOARD (2/2)

BOARD NO. 1-649-616-11

Time Ref Signal(1)

VPR-1 BOARD (6/7)

BOARD NO. 1-648-532-11
BOARD' S LOT NO. 303-306
DVW-A500(J, UC) :VPR-1A MCB
DVW-500 (J, UC) :VPR-1 MCB

DVW-VPR1-NTSC-REC-SIM-04-A

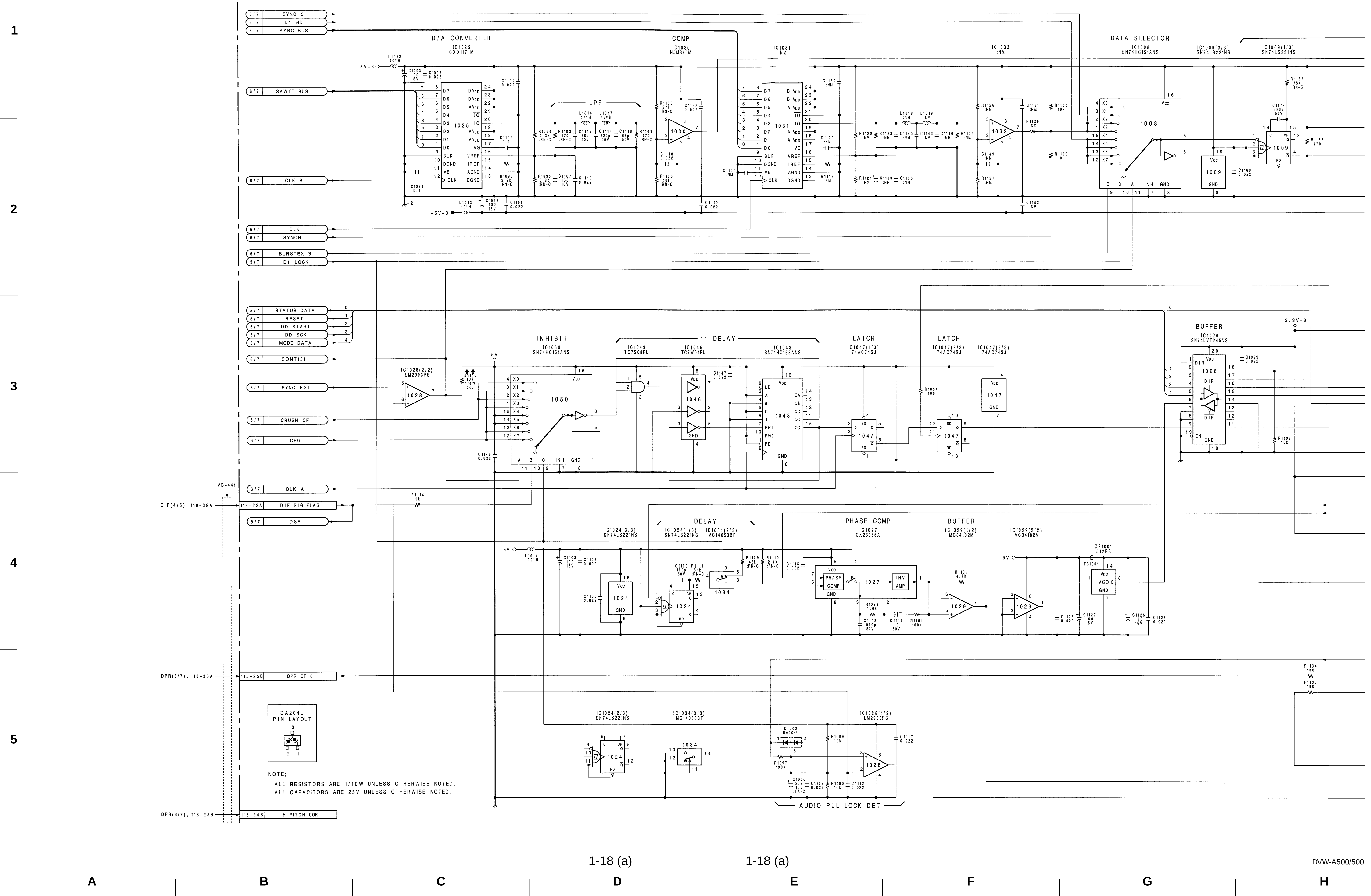
D/A CONVERTER
IC1025
CXD1171M
COMP
IC1030
NJM360M
IC1031
:NM
IC1033
:NM
DATA SELECTOR
IC1008
SN74HC151ANS
IC1009(3/3)
SN74LS221NS
IC1009(1/3)
SN74LS221NS
LPF
SYNC 3
D1 HD
SYNC-BUS
SAWTD-BUS
CLK B
CLK
SYNCNT
BURSTEX B
D1 LOCK
STATUS DATA
RESET
DD START
DD SCK
MODE DATA
CONT151
SYNC EXI
CRUSH CF
CFG
CLK A
DIF SIG FLAG
DSF
DPR CF 0
H PITCH COR
INHIBIT
IC1050
SN74HC151ANS
IC1028(2/2)
LM2903PS
11 DELAY
IC1049
TC7S08FU
IC1046
TC7W04FU
IC1043
SN74HC163ANS
LATCH
IC1047(1/3)
74AC74SJ
IC1047(2/3)
74AC74SJ
IC1047(3/3)
74AC74SJ
BUFFER
IC1026
SN74LVT245NS
3.3V-3
DELAY
IC1024(3/3)
SN74LS221NS
IC1024(1/3)
SN74LS221NS
IC1034(2/3)
MC14053BF
PHASE COMP
IC1027
CX23065A
BUFFER
IC1029(1/2)
MC34182M
IC1029(2/2)
MC34182M
CP1001
512FS
VCO
INV AMP
IC1024(2/3)
SN74LS221NS
IC1034(3/3)
MC14053BF
IC1028(1/2)
LM2903PS
D1002
DA204U
AUDIO PLL LOCK DET
DA204U
PIN LAYOUT
MB-441
DIF(4/5), 110-39A
DPR(3/7), 118-35A
DPR(3/7), 118-25B
NOTE;
ALL RESISTORS ARE 1/10W UNLESS OTHERWISE NOTED.
ALL CAPACITORS ARE 25V UNLESS OTHERWISE NOTED.
1
2
3
4
5
A
B
C
D
E
F
G
H

http://getMANUAL.com

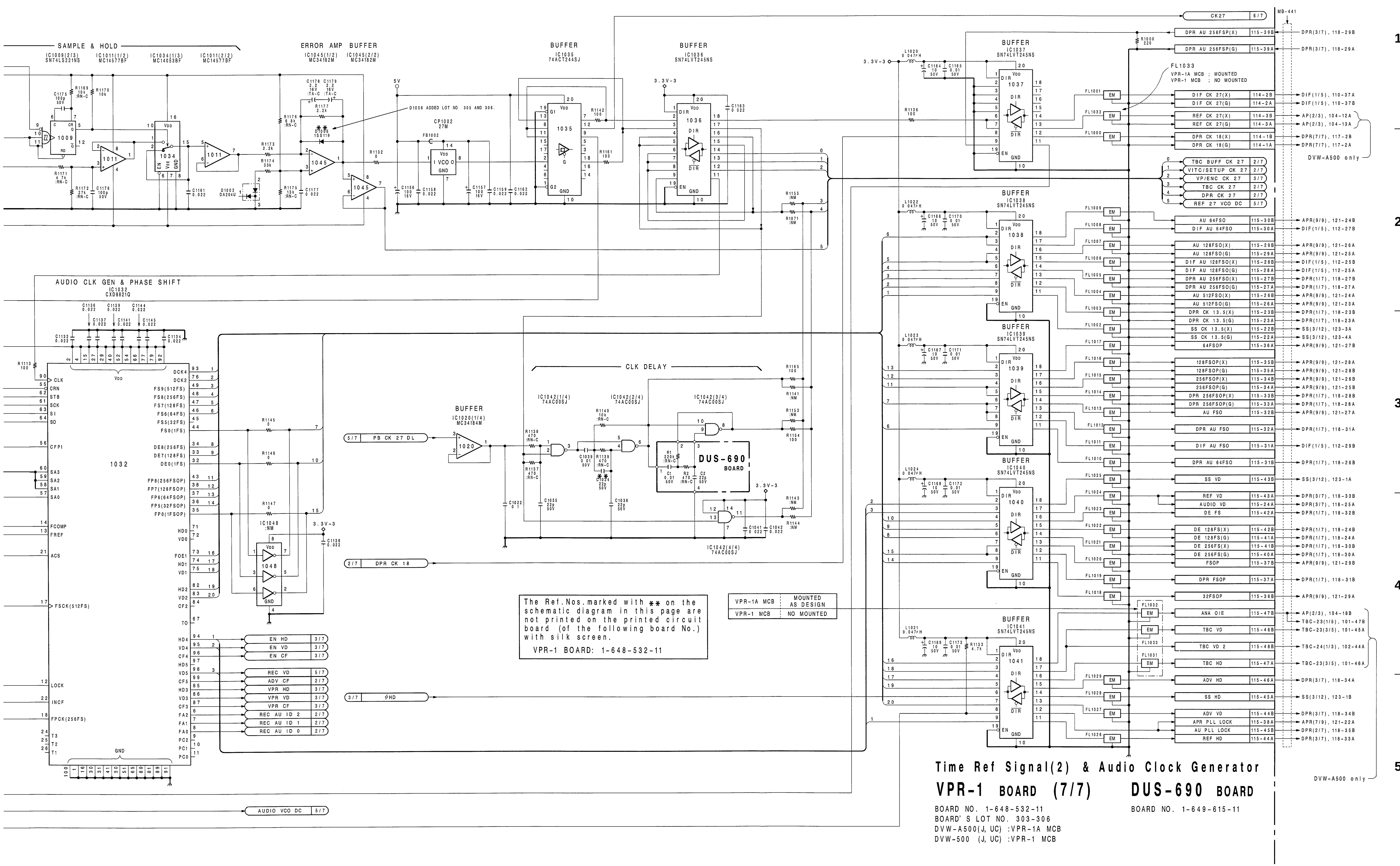

 APR-1 (1/9)

1

2

3

4

5

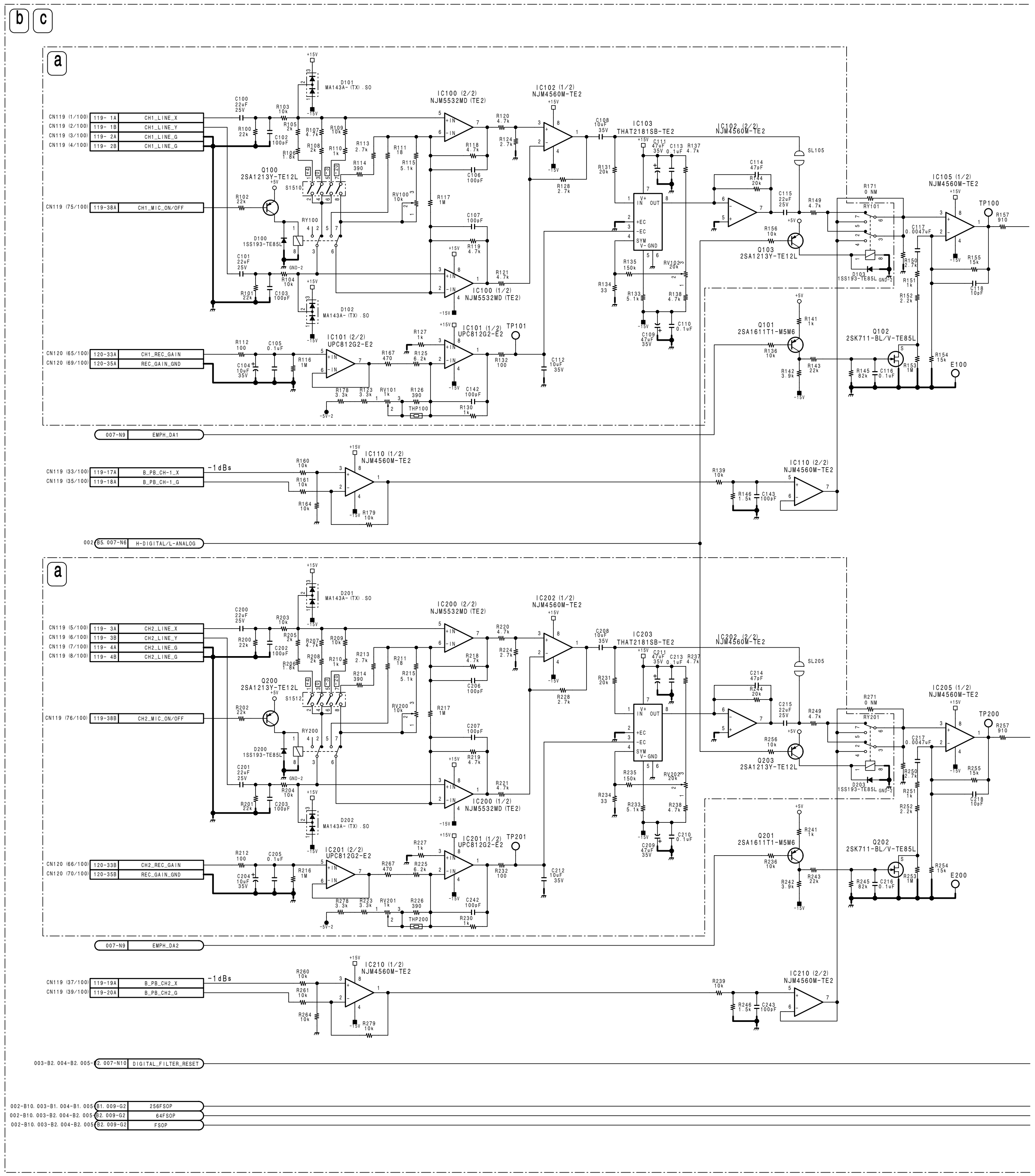

	DVW-A500 DVW-500	DVW-A510	DVW-510	DVW-522
a	MOUNT	NO MOUNT	NO MOUNT	NO MOUNT
b	MOUNT	MOUNT	NO MOUNT	NO MOUNT
c	MOUNT	MOUNT	MOUNT	NO MOUNT

 1-20 (b)

A B C D E F G H

APR-1 (1/9)

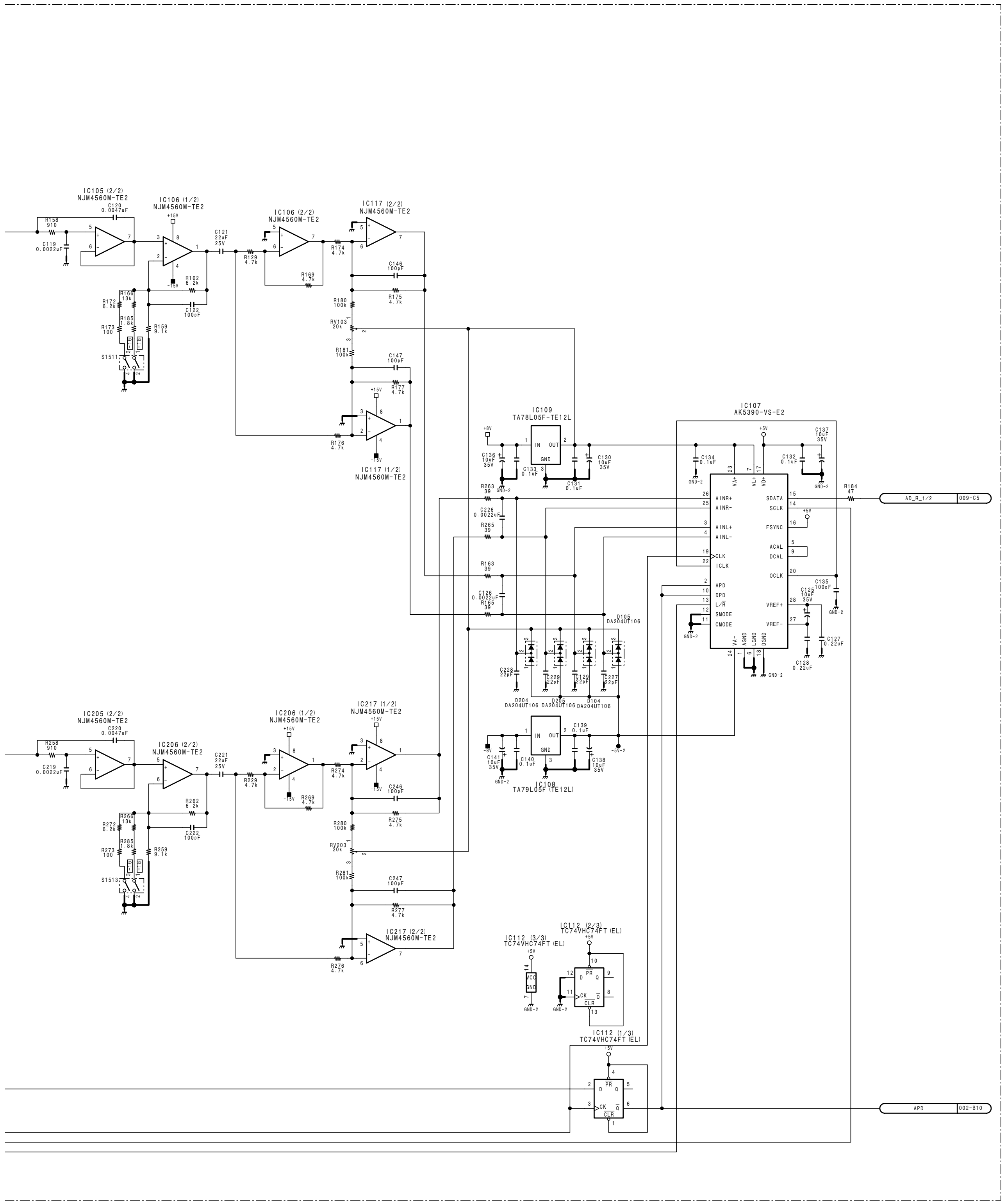

1
2
3
4
5

CH-1/CH-2 A/D Convert

APR-1 BOARD (1/9)

BOARD NO. 1-648-534-16
BOARD'S LOT NO. 910-
DVW-A500 (J, UC) : APR-1 MCB
DVW-A500P (EK) : APR-1 MCB
DVW-A500P (UC) : APR-1 MCB
DVW-500 (J, UC) : APR-1 MCB
DVW-500P (EK) : APR-1 MCB
DVW-500P (UC) : APR-1 MCB
DVW-A500_APR-1_016_1

1-21 (b)

I | J | K | L | M | N | O | P

1

2

3

4

5

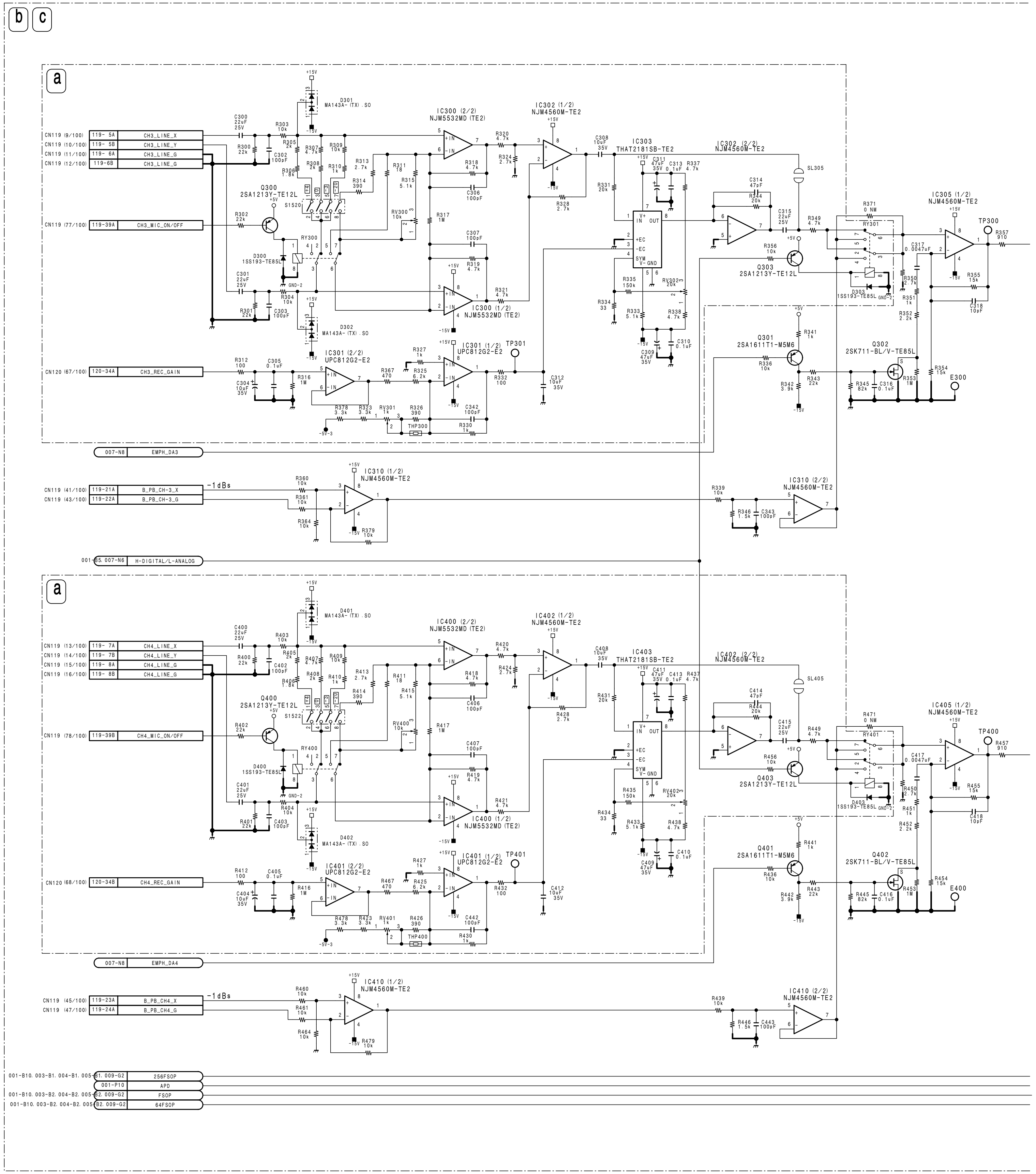

A B C D E F G H

APR-1 (2/9)

1
2
3
4
5

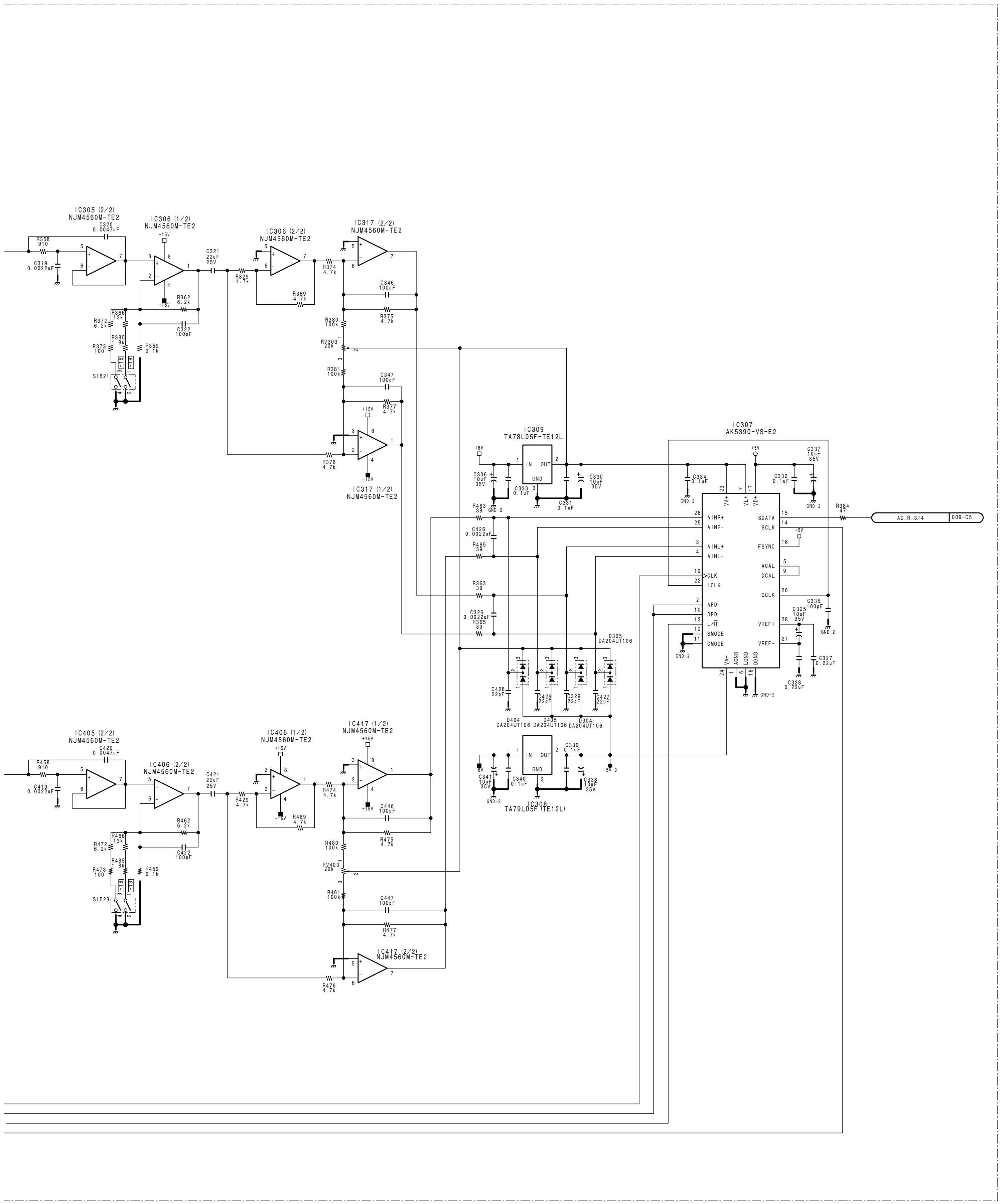

CH-3/CH-4 A/D Convert

APR-1 BOARD (2/9)

BOARD NO. 1-648-534-16
BOARD'S LOT NO. 910-
DVW-A500 (J, UC) : APR-1 MCB
DVW-A500P (EK) : APR-1 MCB
DVW-A500P (UC) : APR-1 MCB
DVW-500 (J, UC) : APR-1 MCB
DVW-500P (EK) : APR-1 MCB
DVW-500P (UC) : APR-1 MCB
DVW-A500_APR-1_016_2

1-23 (b)

APR-1 (3/9)

1

2

3

4

5

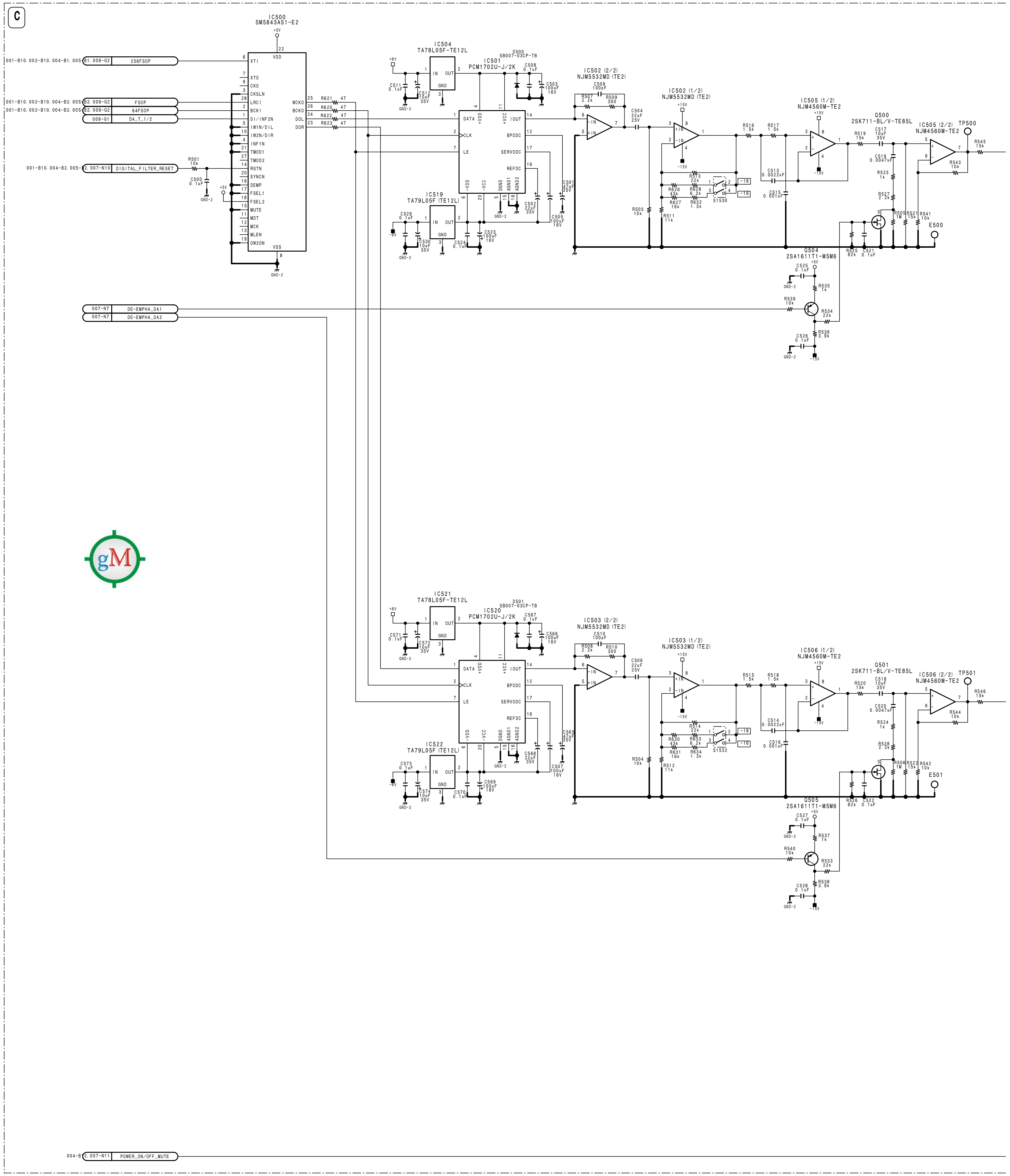

1-24 (b)

A | B | C | D | E | F | G | H

APR-1 (3/9)

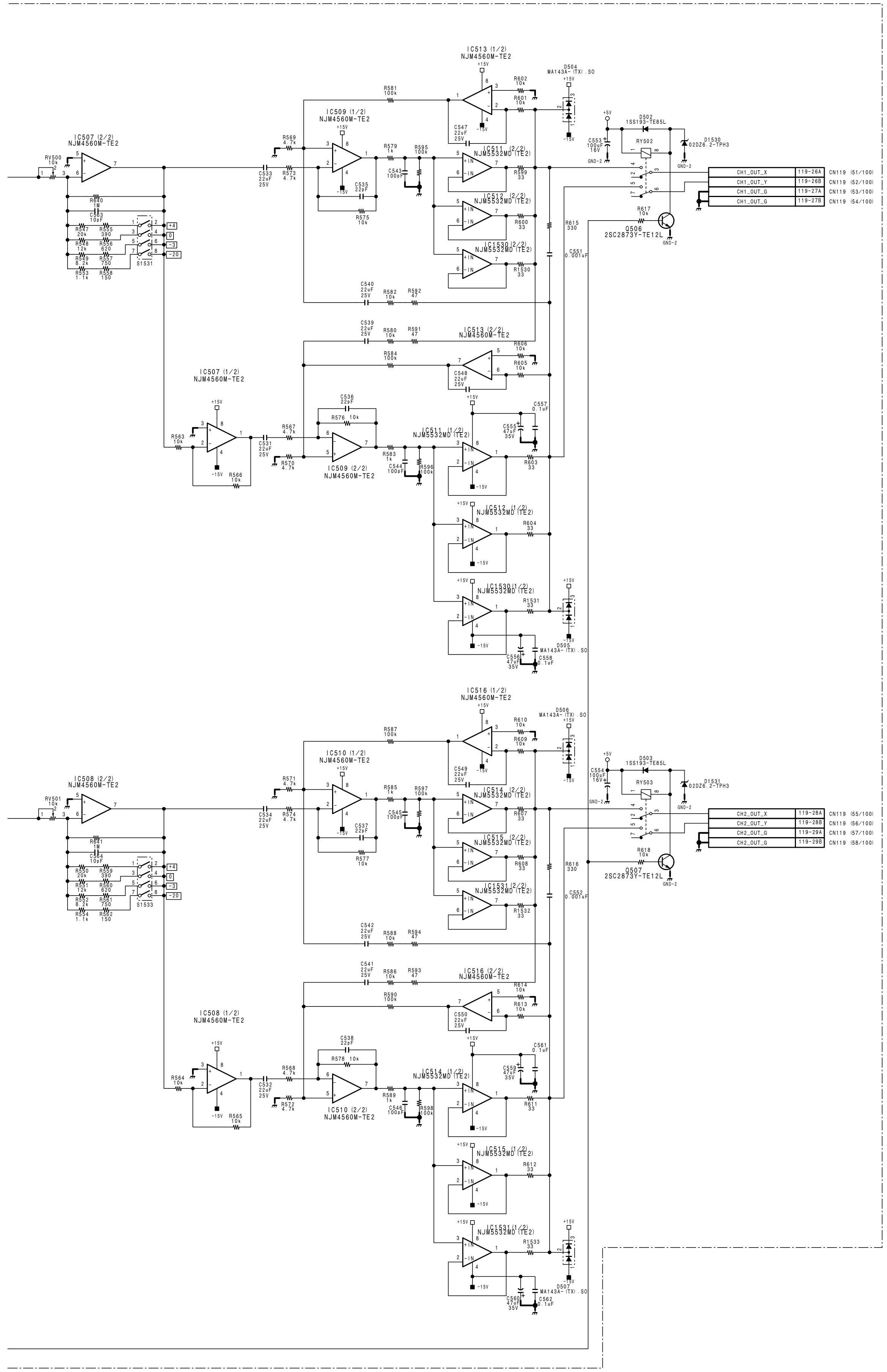

1
2
3
4
5

CH-1/CH-2 D/A Convert & Output Drive

APR-1 BOARD (3/9)

BOARD NO. 1-648-534-16
BOARD'S LOT NO. 910-
DVW-A500 (J, UC) : APR-1 MCB
DVW-A500P (EK) : APR-1 MCB
DVW-A500P (UC) : APR-1 MCB
DVW-500 (J, UC) : APR-1 MCB
DVW-500P (EK) : APR-1 MCB
DVW-500P (UC) : APR-1 MCB
DVW-A500_APR-1_016_3

1-25 (b)

I J K L M N O P

APR-1 (4/9)

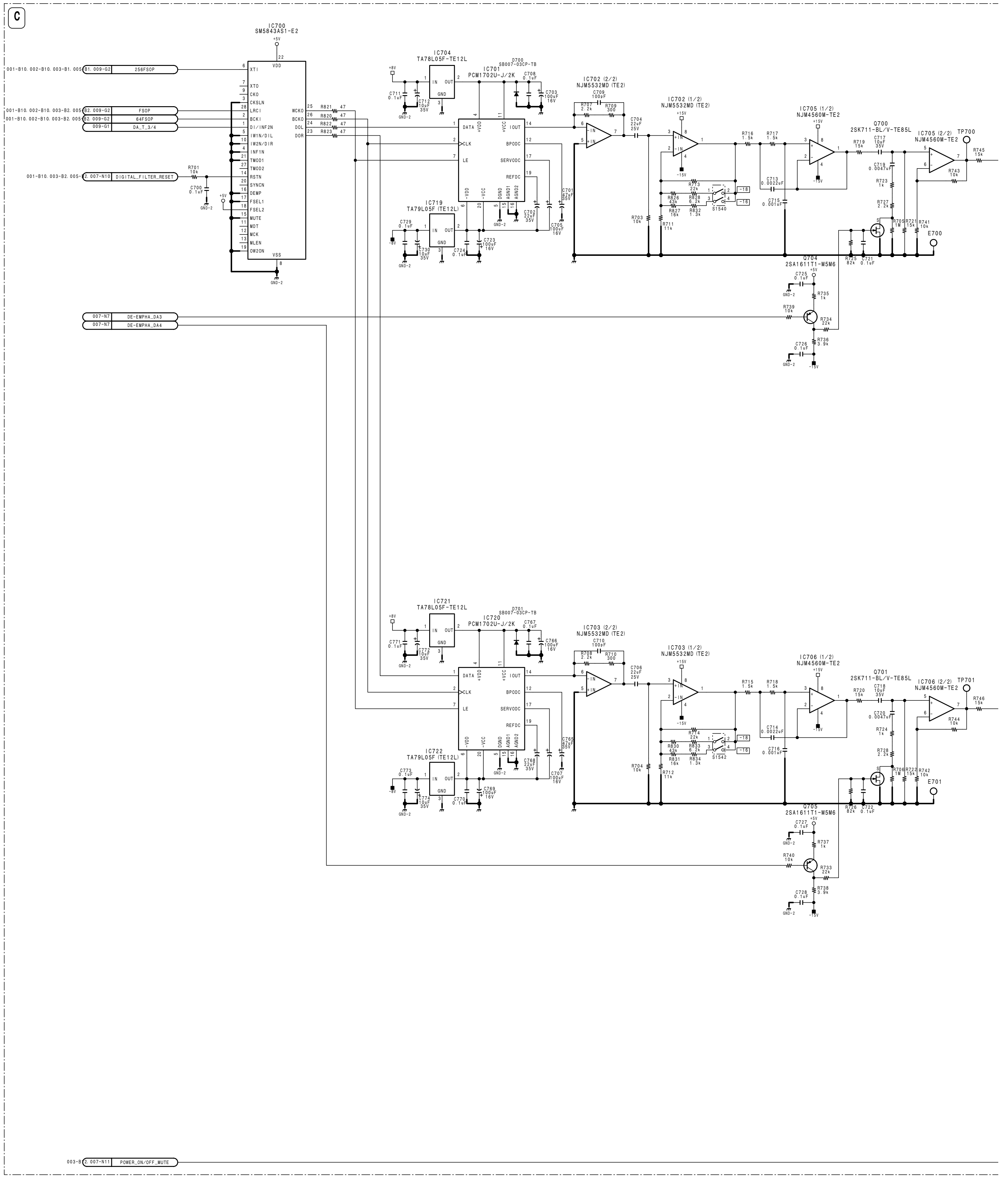

1-26 (b)

A B C D E F G H

 APR-1 (4/9)

1

2

3

4

5

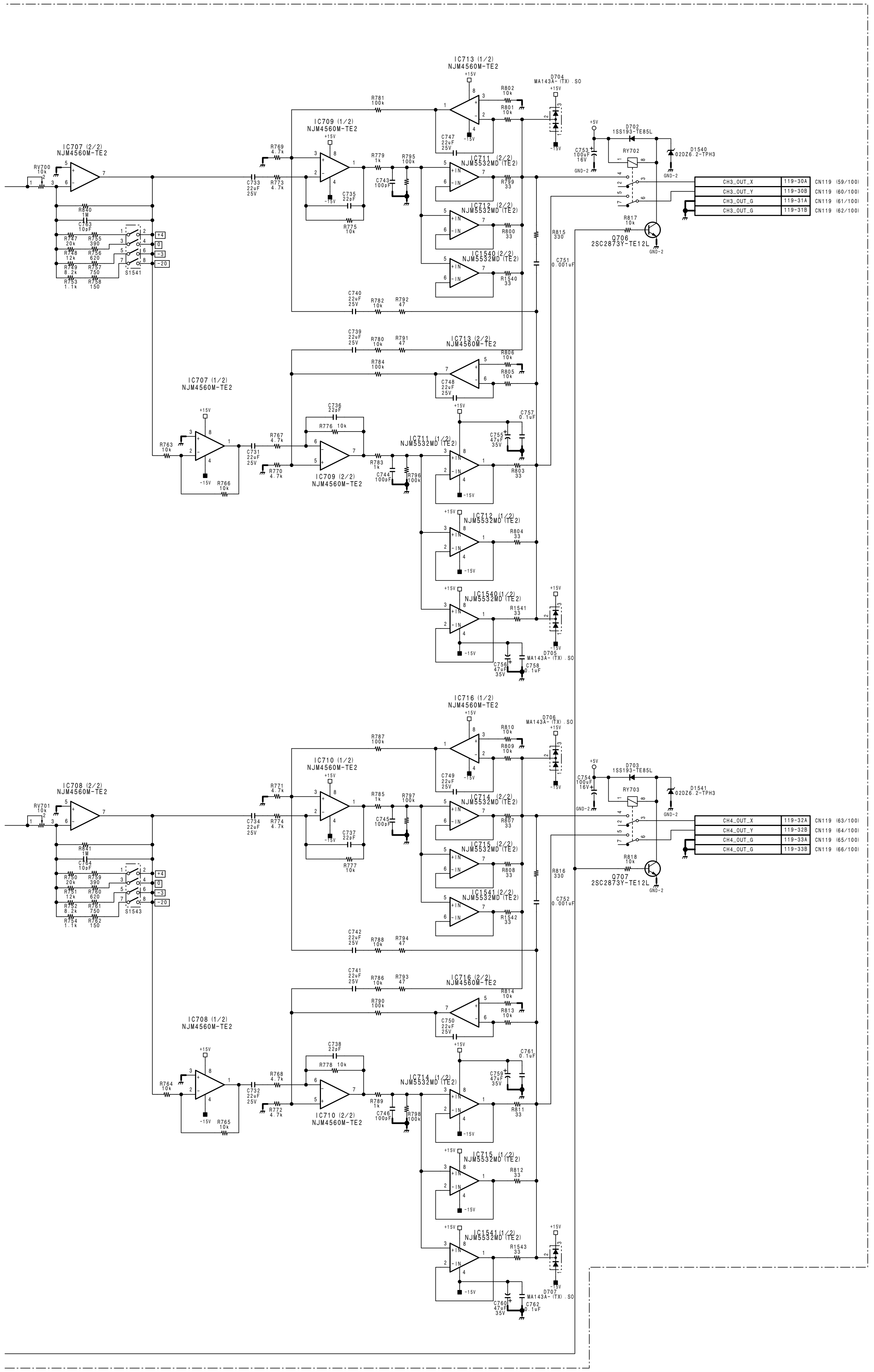

CH-3/CH-4 D/A Convert & Output Drive

APR-1 BOARD (4/9)

BOARD NO. 1-648-534-16
BOARD'S LOT NO. 910-
DVW-A500 (J, UC) : APR-1 MCB
DVW-A500P (EK) : APR-1 MCB
DVW-A500P (UC) : APR-1 MCB
DVW-500 (J, UC) : APR-1 MCB
DVW-500P (EK) : APR-1 MCB
DVW-500P (UC) : APR-1 MCB

DVW-A500_APR-1_016_4

I | J | K | L | M | N | O | P

1
2
3
4
5

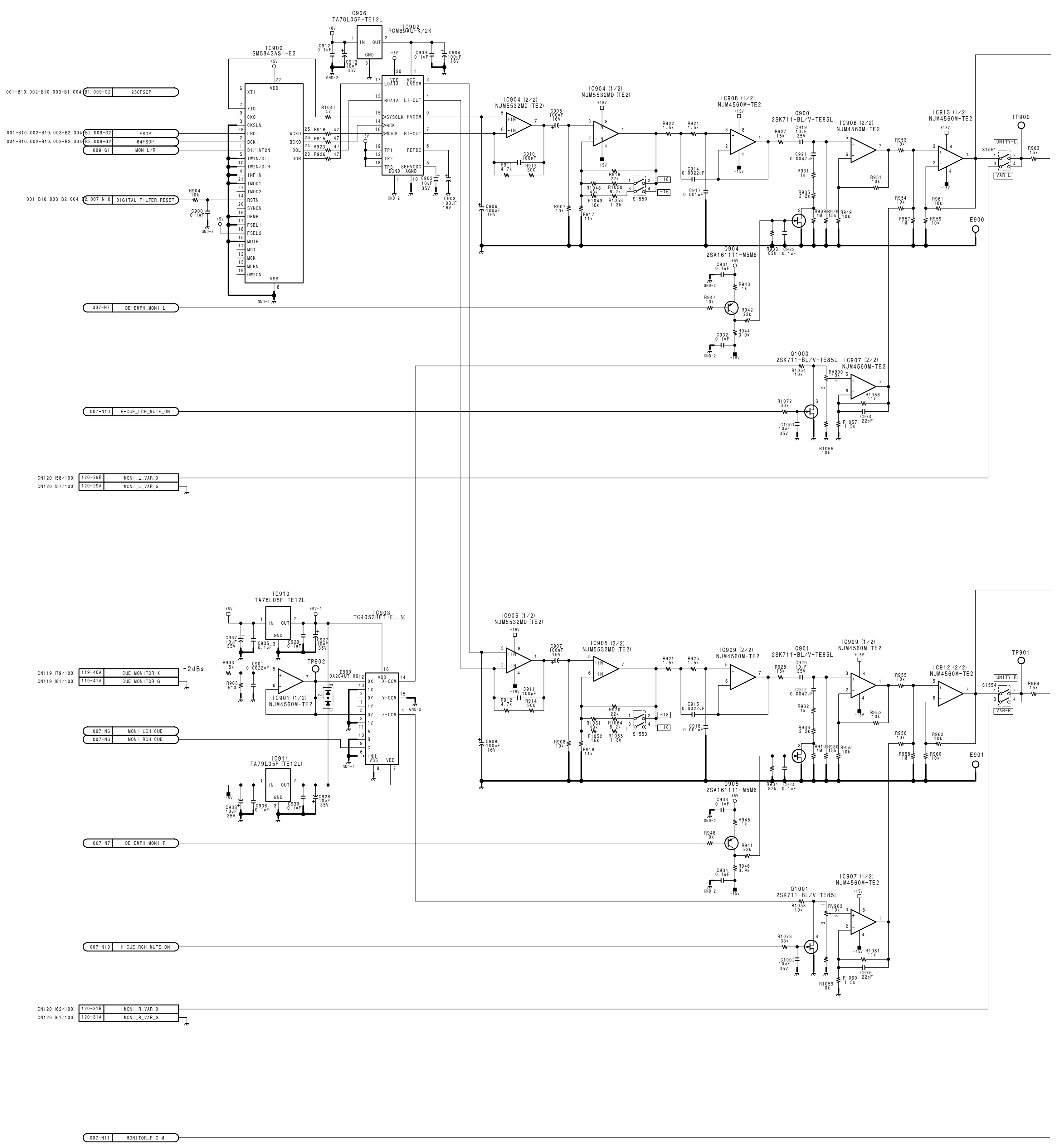

A B C D E F G H

http://getMANUAL.com

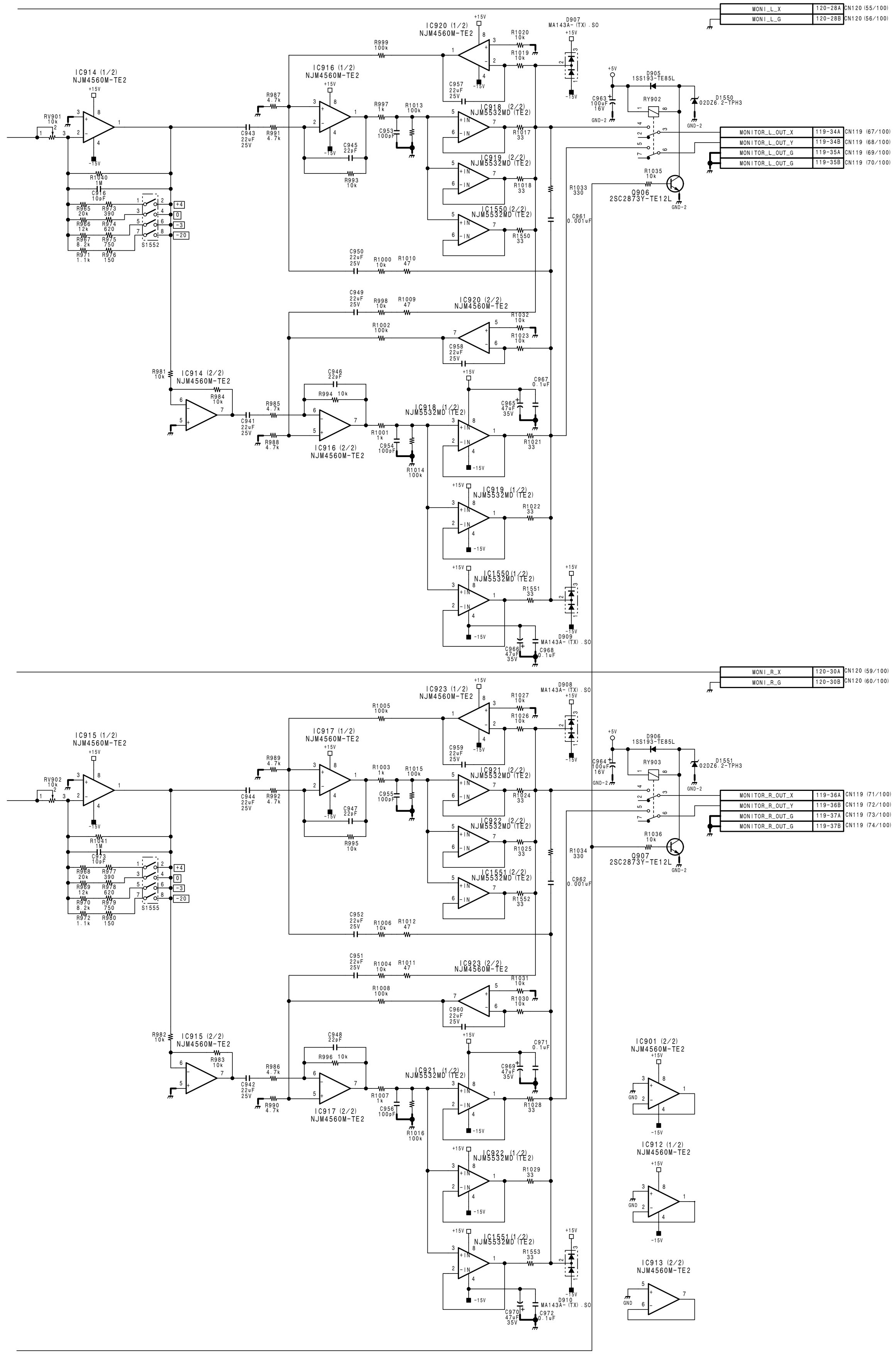

1
2
3
4
5

Monitor L/R D/A Convert & Output Drive

APR-1 BOARD (5/9)

BOARD NO. 1-648-534-16
BOARD'S LOT NO. 910-
DVW-A500 (J, UC) : APR-1 MCB
DVW-A500P (EK) : APR-1 MCB
DVW-A500P (UC) : APR-1 MCB
DVW-500 (J, UC) : APR-1 MCB
DVW-500P (EK) : APR-1 MCB
DVW-500P (UC) : APR-1 MCB

DVW-A500_APR-1_016_5

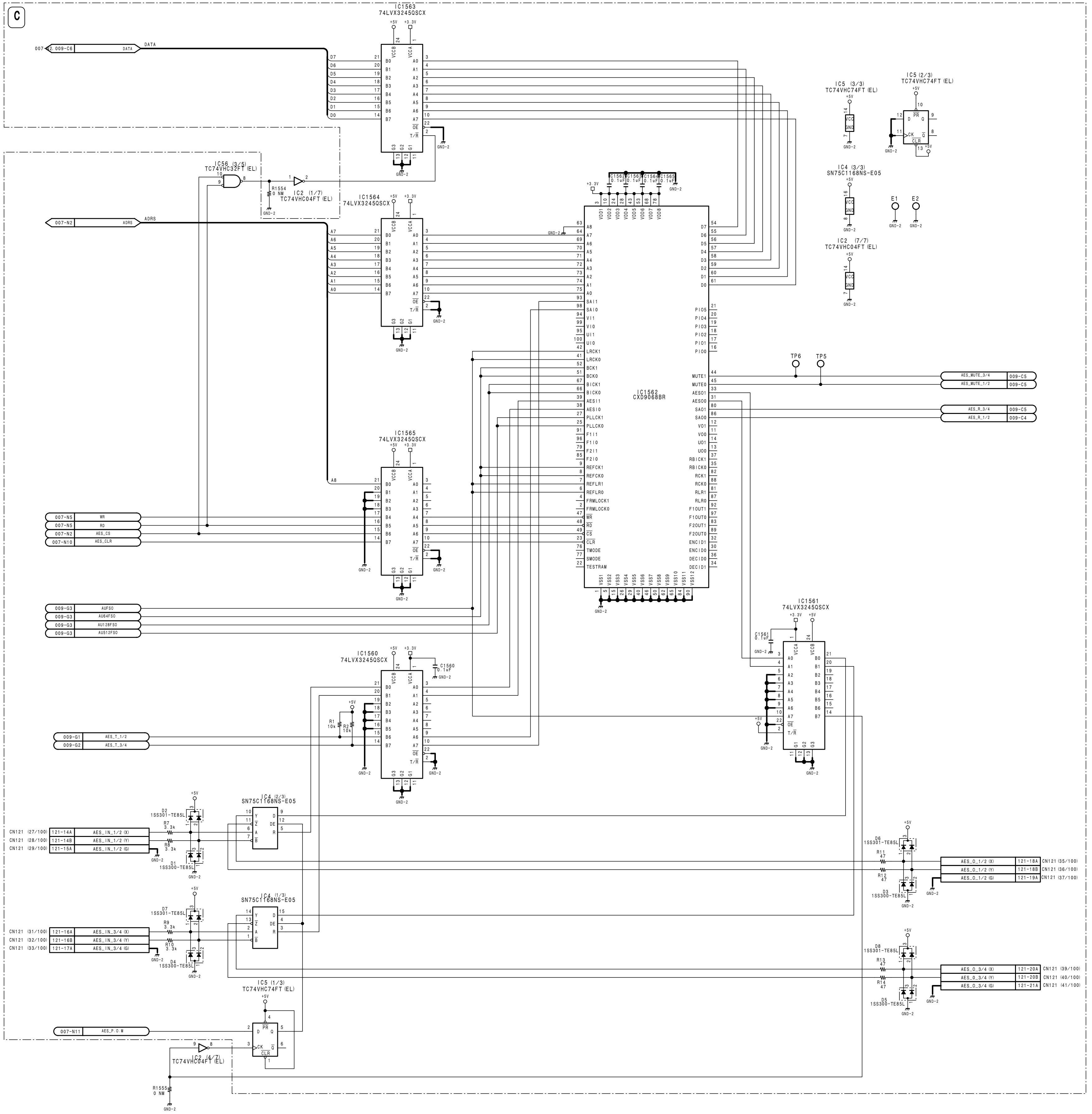

AES Encode/Decode

APR-1 BOARD (6/9)

BOARD NO. 1-648-534-16
BOARD'S LOT NO. 910-
DVW-A500 (J, UC) :APR-1 MCB
DVW-A500P (EK) :APR-1 MCB
DVW-A500P (UC) :APR-1 MCB
DVW-500 (J, UC) :APR-1 MCB
DVW-500P (EK) :APR-1 MCB
DVW-500P (UC) :APR-1 MCB

DVW-A500_APR-1_016_6

 APR-1 (7/9)

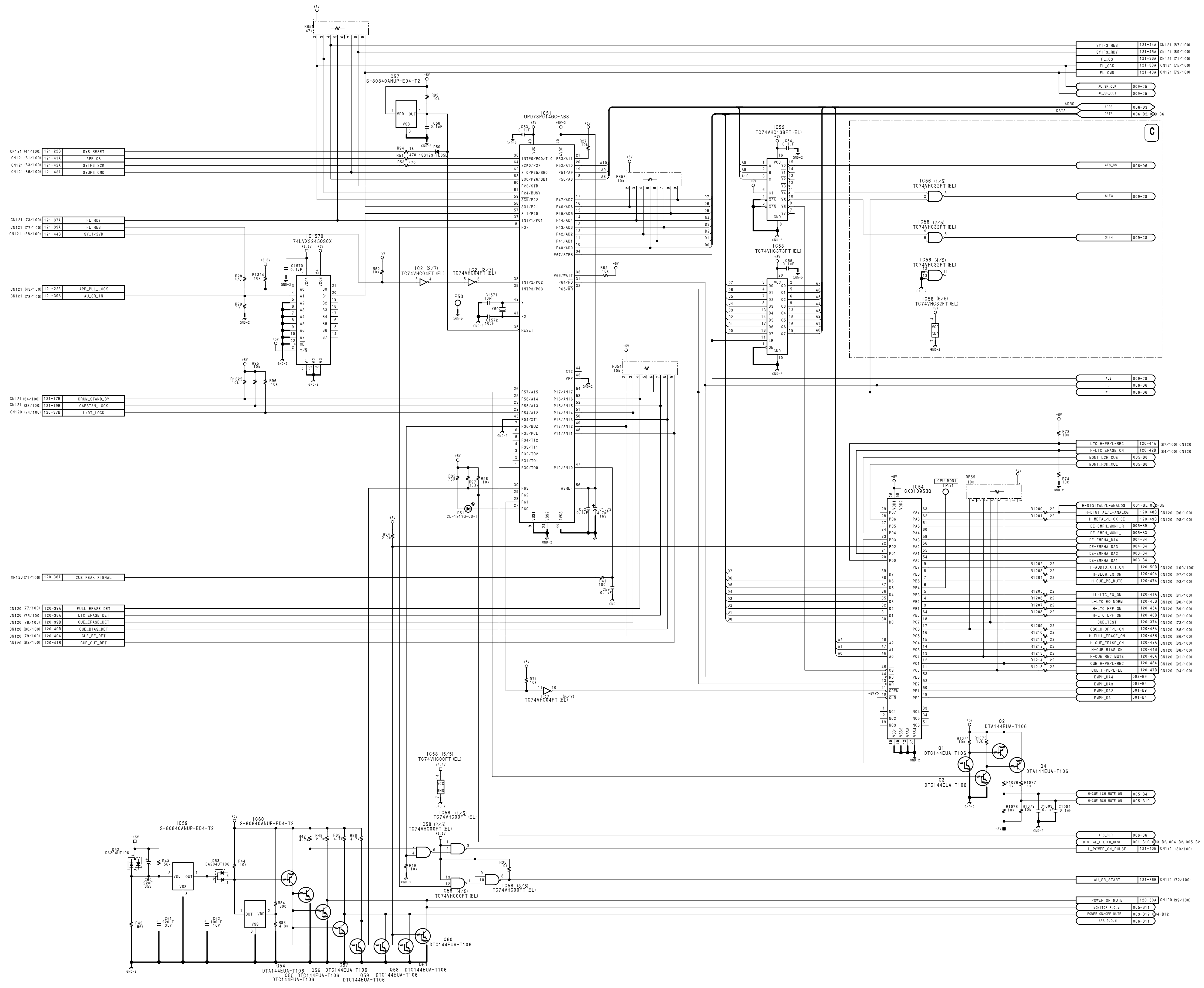

1
2
3
4
5

Digital Audio System Control

APR-1 BOARD (7/9)

BOARD NO. 1-648-534-16
BOARD'S LOT NO. 910-
DVW-A500 (J, UC) : APR-1 MCB
DVW-A500P (EK) : APR-1 MCB
DVW-A500P (UC) : APR-1 MCB
DVW-500 (J, UC) : APR-1 MCB
DVW-500P (EK) : APR-1 MCB
DVW-500P (UC) : APR-1 MCB

DVW-A500_APR-1_016_7

 1-31 (b)

A B C D E F G H

1

2

3

4

5

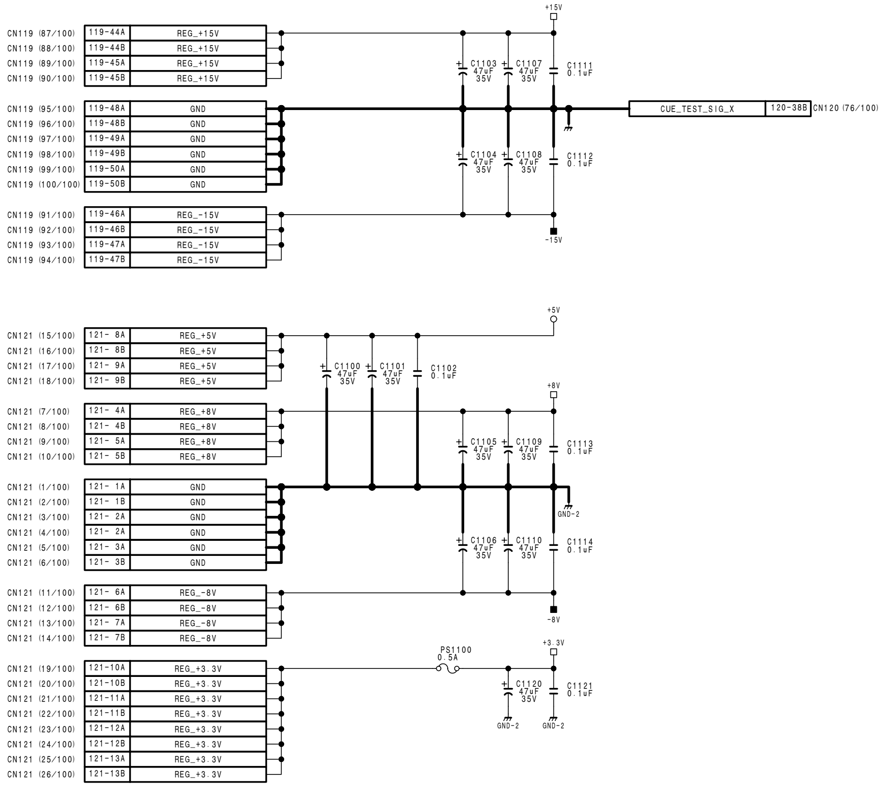

Digital Audio Self-Diagnosis

APR-1 BOARD (8/9)

BOARD NO. 1-648-534-16
BOARD'S LOT NO. 910-
DVW-A500 (J, UC) : APR-1 MCB
DVW-A500P (EK) : APR-1 MCB
DVW-A500P (UC) : APR-1 MCB
DVW-500 (J, UC) : APR-1 MCB
DVW-500P (EK) : APR-1 MCB
DVW-500P (UC) : APR-1 MCB
DVW-A500_APR-1_016_8

A | B | C | D | E | F | G | H

 APR-1 (9/9)

1
2
3
4
5

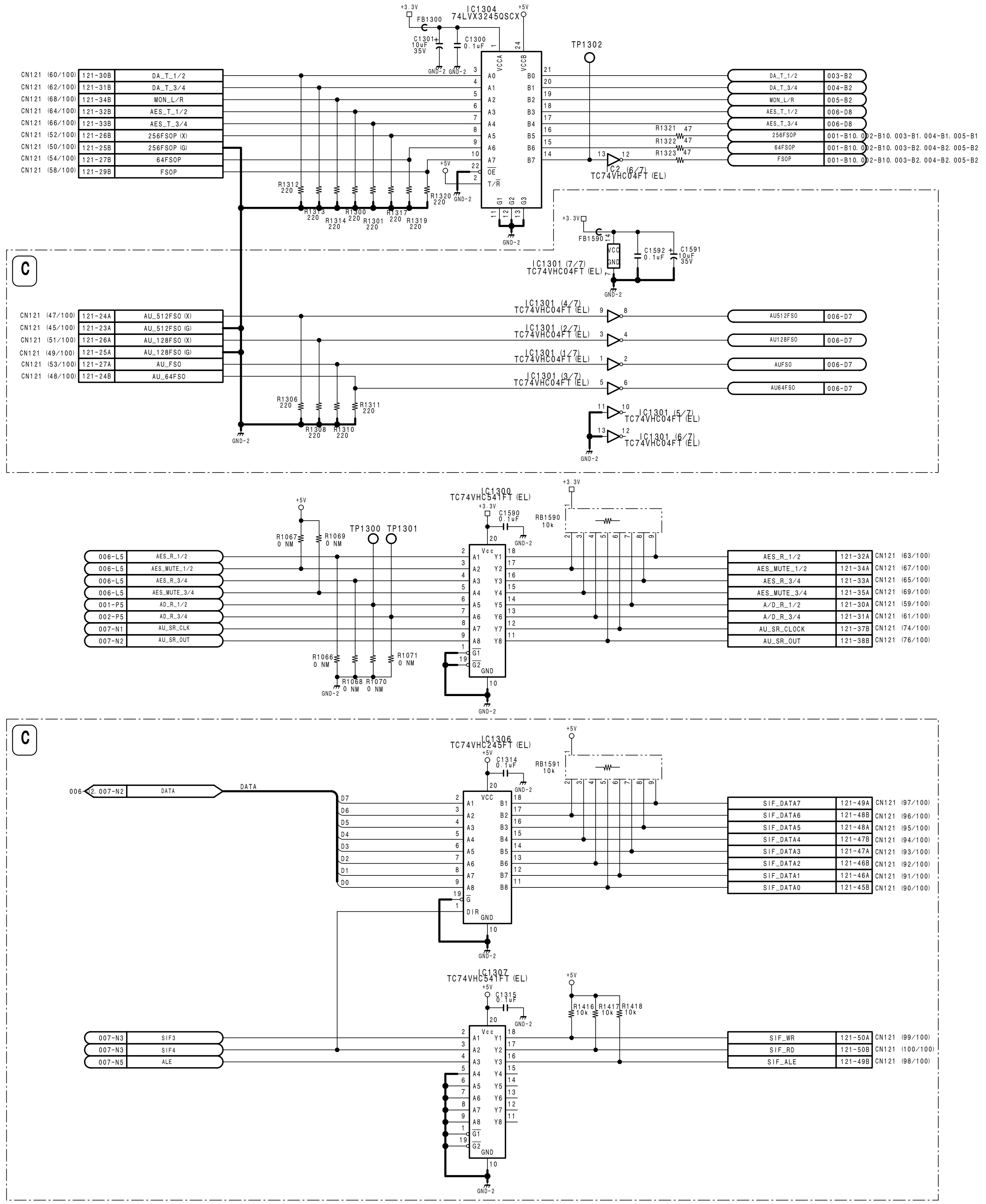

Bus Buffer

APR-1 BOARD (9/9)

BOARD NO. 1-648-534-16
BOARD'S LOT NO. 910-
DVW-A500 (J, UC) : APR-1 MCB
DVW-A500P (EK) : APR-1 MCB
DVW-A500P (UC) : APR-1 MCB
DVW-500 (J, UC) : APR-1 MCB
DVW-500P (EK) : APR-1 MCB
DVW-500P (UC) : APR-1 MCB

DVW-A500_APR-1_016_9

 1-33 (b)

A B C D E F G H

 APR-1 (1/9)

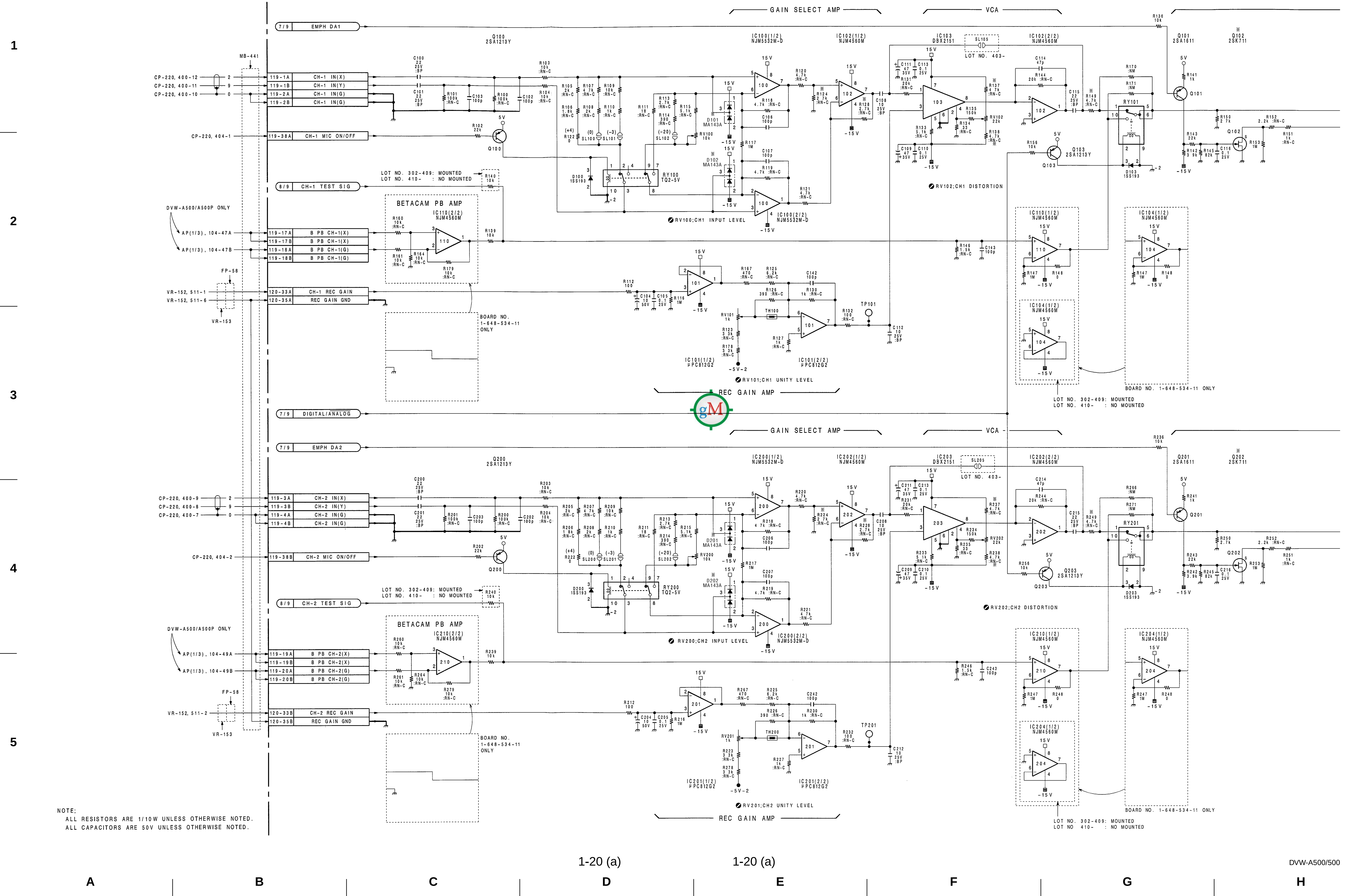

NOTE;
ALL RESISTORS ARE 1/10W UNLESS OTHERWISE NOTED.
ALL CAPACITORS ARE 50V UNLESS OTHERWISE NOTED.

 1-20 (a)

 APR-1 (1/9)

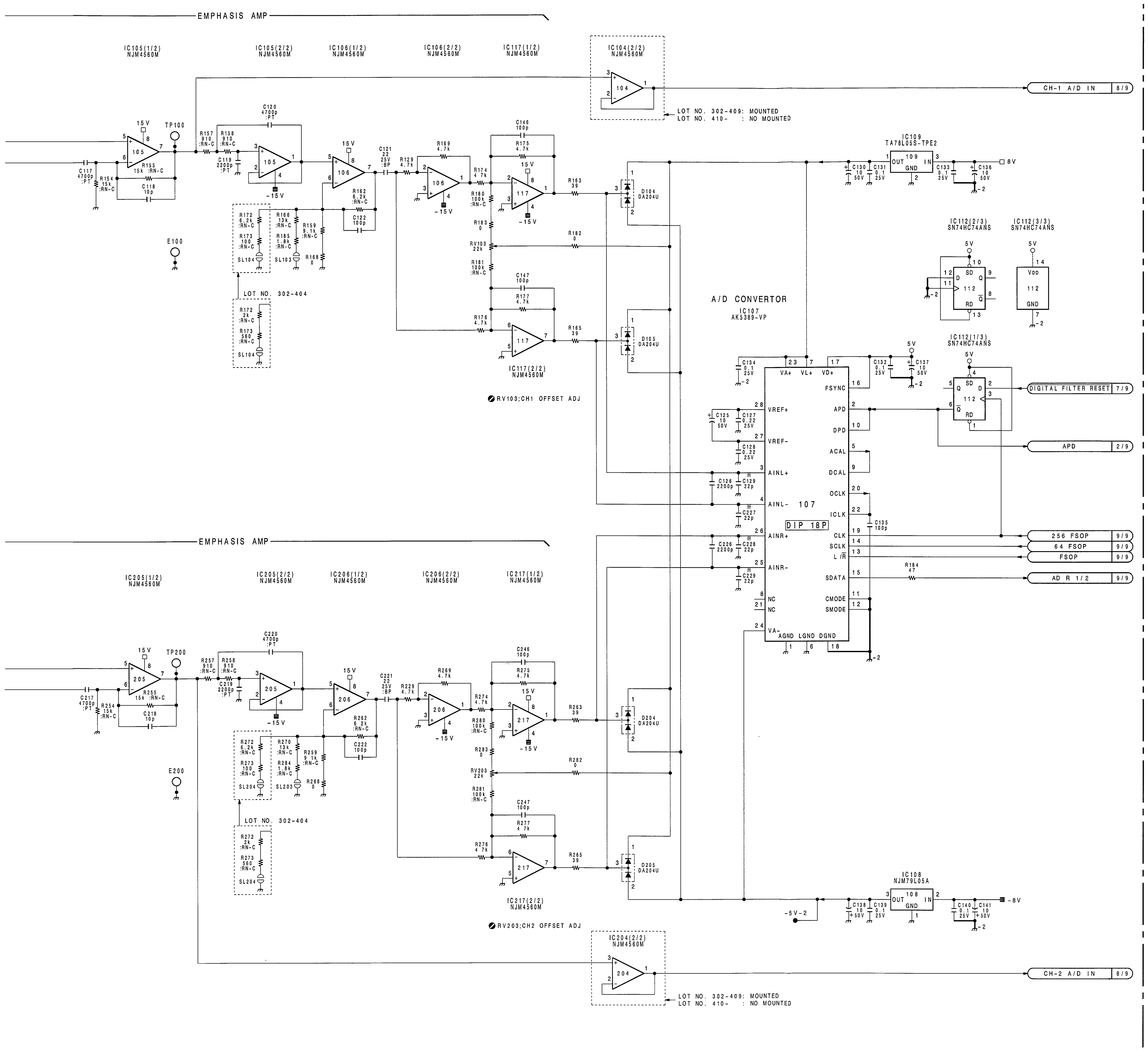

※PART CHANGE INFORMATION　旧部品に対する補修部品　同時に交換する部品

	Part change information			Change	Repair part	Simulataneously
	Ref. No.	Old	New	LOT No.	for Old part	change part
F-1	R137	20k →	4.7k	309	4.7k	R138
F-2	R138	20k →	4.7k	309	4.7k	R137
F-4	R237	20k →	4.7k	309	4.7k	R238
F-4	R238	20k →	4.7k	309	4.7k	R237
L-3	C129	2200p →	22p	401	22p	C227, C228, C229
L-3	C227	2200p →	22p	401	22p	C129, C228, C229
L-3	C228	2200p →	22p	401	22p	C129, C227, C229
L-3	C229	2200p →	22p	401	22p	C129, C227, C228
E-1	D101	DA204U →	1SS302	403	MA143A	
		1SS302 →	MA143A	806		
E-2	D102	DA204U →	1SS302	403	MA143A	
		1SS302 →	MA143A	806		
E-4	D201	DA204U →	1SS302	403	MA143A	
		1SS302 →	MA143A	806		
E-4	D202	DA204U →	1SS302	403	MA143A	
		1SS302 →	MA143A	806		
H-1	Q102	2SK300 →	2SK711	405	2SK711	
H-3	Q202	2SK300 →	2SK711	405	2SK711	
E-1	R124	4.7k →	2.7k	⚠ 405	2.7k	R128, R149
E-1	R128	4.7k →	2.7k	⚠ 405	2.7k	R124, R149
G-1	R149	11k →	4.7k	⚠ 405	4.7k	R124, R128
E-4	R224	4.7k →	2.7k	⚠ 405	2.7k	R228, R249
E-4	R228	4.7k →	2.7k	⚠ 405	2.7k	R224, R249
G-4	R249	11k →	4.7k	⚠ 405	4.7k	R224, R228

⚠ ; IN THE CASE OF APR-1P MCB, CHANGED FROM LOT NO 403

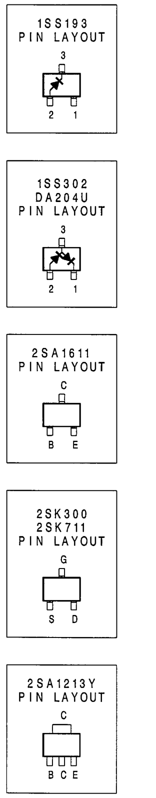

LOT NO.	BOARD NO.
302-305	1-648-534-11
306	1-648-534-11, 12
307-402	1-648-534-12
403-412	1-648-534-13
501-909	1-648-534-14

CH-1/CH-2 A/D Convert

APR-1 BOARD (1/9)

BOARD NO. 1-648-534-11, 12, 13, 14
BOARD' S LOT NO. 302-909
DVW-A500(J, UC) :APR-1 MCB
DVW-A500P(EK) :APR-1P MCB
DVW-A500P(UC) :APR-1PG MCB
DVW-500 (J, UC) :APR-1 MCB
DVW-500P (EK) :APR-1P MCB
DVW-500P (UC) :APR-1PG MCB

DVW-APR1-ALL-REC-S/M-04

 1-21 (a)

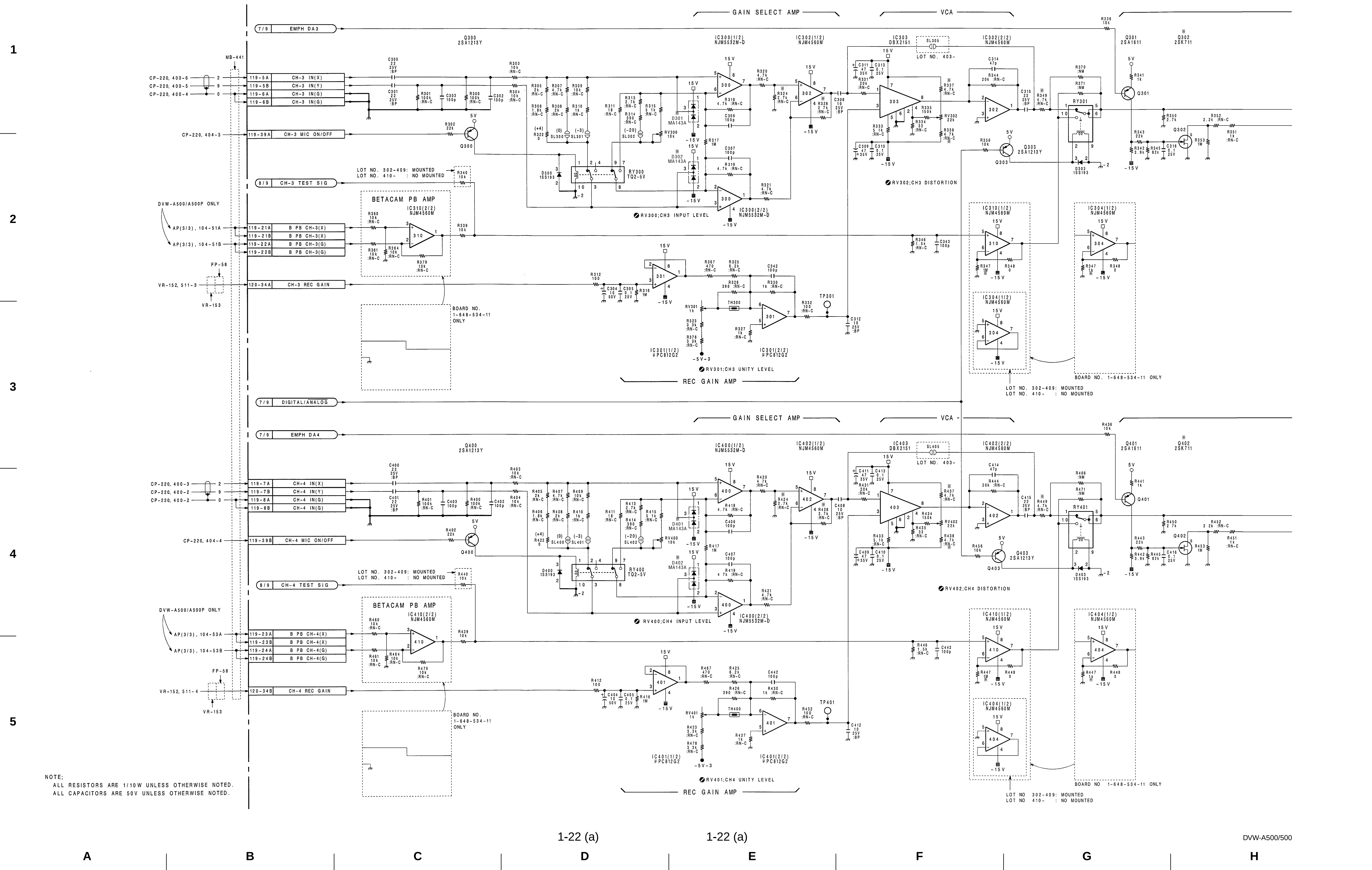

NOTE;
ALL RESISTORS ARE 1/10W UNLESS OTHERWISE NOTED.
ALL CAPACITORS ARE 50V UNLESS OTHERWISE NOTED.

 APR-1 (2/9)

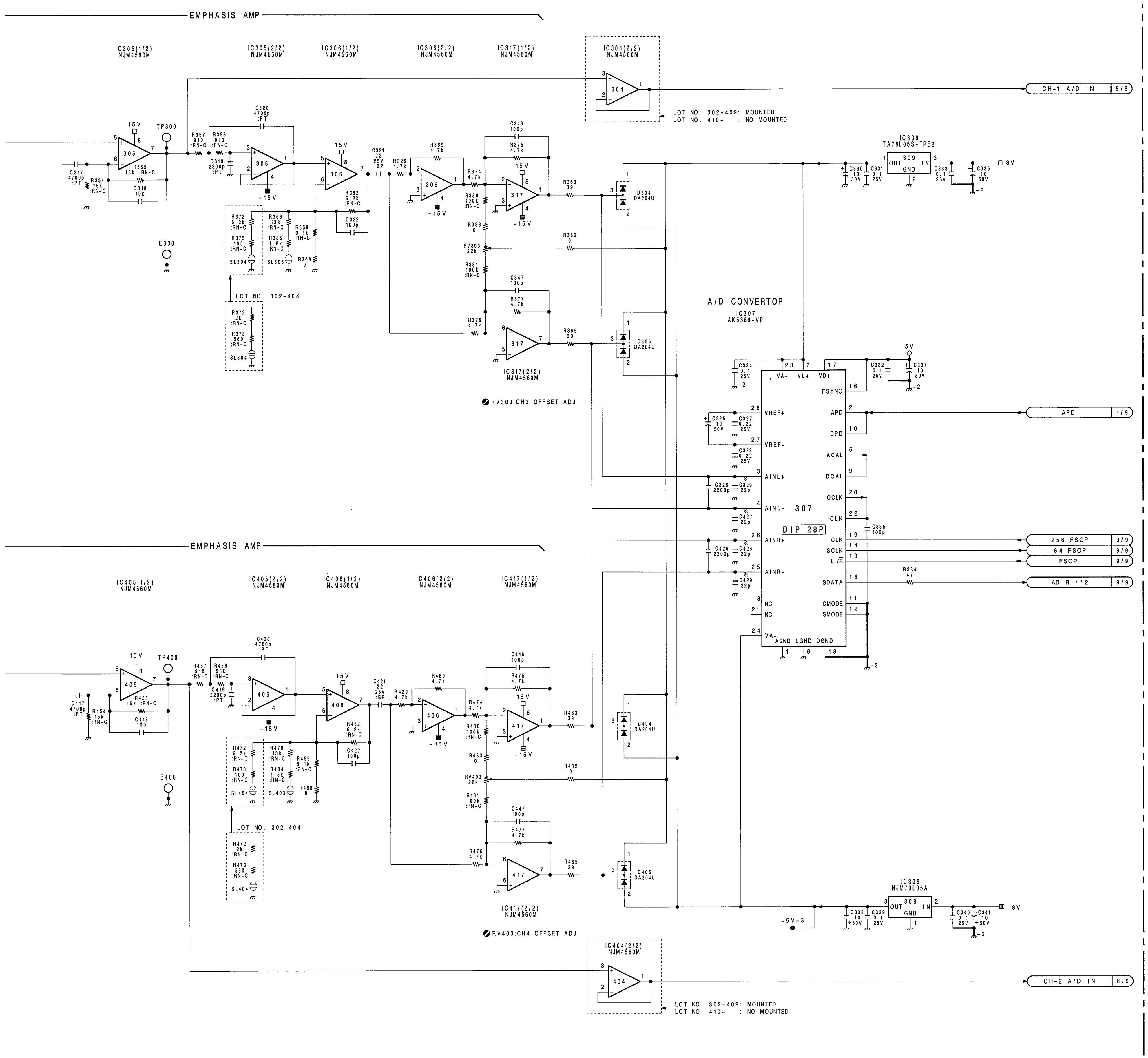

※ PART CHANGE INFORMATION 旧部品に対する補修部品 同時に交換する部品

	Part change information Ref. No.	Old → New	Change LOT No.	Repair part for Old part	Simulataneously change part
F-1	R337	20k → 4.7k	309	4.7k	R338
F-2	R338	20k → 4.7k	309	4.7k	R337
F-4	R437	20k → 4.7k	309	4.7k	R438
F-4	R438	20k → 4.7k	309	4.7k	R437
F-2 / G-2	R347	1k → 1M	310	1M	
F-5 / G-5	R447	1k → 1M	310	1M	
L-3	C329	2200p → 22p	401	22p	C427, C428, C429
L-3	C427	2200p → 22p	401	22p	C329, C428, C429
L-3	C428	2200p → 22p	401	22p	C329, C427, C429
L-3	C429	2200p → 22p	401	22p	C329, C427, C428
E-1	D301	DA204U → 1SS302 1SS302 → MA143A	403 806	MA143A	
E-2	D302	DA204U → 1SS302 1SS302 → MA143A	403 806	MA143A	
E-4	D401	DA204U → 1SS302 1SS302 → MA143A	403 806	MA143A	
E-4	D402	DA204U → 1SS302 1SS302 → MA143A	403 806	MA143A	
H-1	Q302	2SK300 → 2SK711	405	2SK711	
H-3	Q402	2SK300 → 2SK711	405	2SK711	
E-1	R324	4.7k → 2.7k	△ 405	2.7k	R328, R349
E-1	R328	4.7k → 2.7k	△ 405	2.7k	R324, R349
G-1	R349	11k → 4.7k	△ 405	4.7k	R324, R328
E-4	R424	4.7k → 2.7k	△ 405	2.7k	R428, R449
E-4	R428	4.7k → 2.7k	△ 405	2.7k	R424, R449
G-4	R449	11k → 4.7k	△ 405	4.7k	R424, R428

△ ; IN THE CASE OF APR-1P MCB, CHANGED FROM LOT NO. 403.

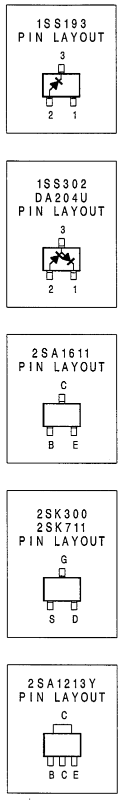

LOT NO.	BOARD NO.
302-305	1-648-534-11
306	1-648-534-11, 12
307-402	1-648-534-12
403-412	1-648-534-13
501-909	1-648-534-14

CH-3/CH-4 A/D Convert
APR-1 BOARD (2/9)

BOARD NO. 1-648-534-11, 12, 13, 14
BOARD' S LOT NO. 302-909
DVW-A500(J, UC) :APR-1 MCB
DVW-A500P(EK) :APR-1P MCB
DVW-A500P(UC) :APR-1PG MCB
DVW-500 (J, UC) :APR-1 MCB
DVW-500P (EK) :APR-1P MCB
DVW-500P (UC) :APR-1PG MCB

DVW-APR1-ALL-REC-S/M-04

1 2 3 4 5

I J K L M N O P

APR-1 (3/9)

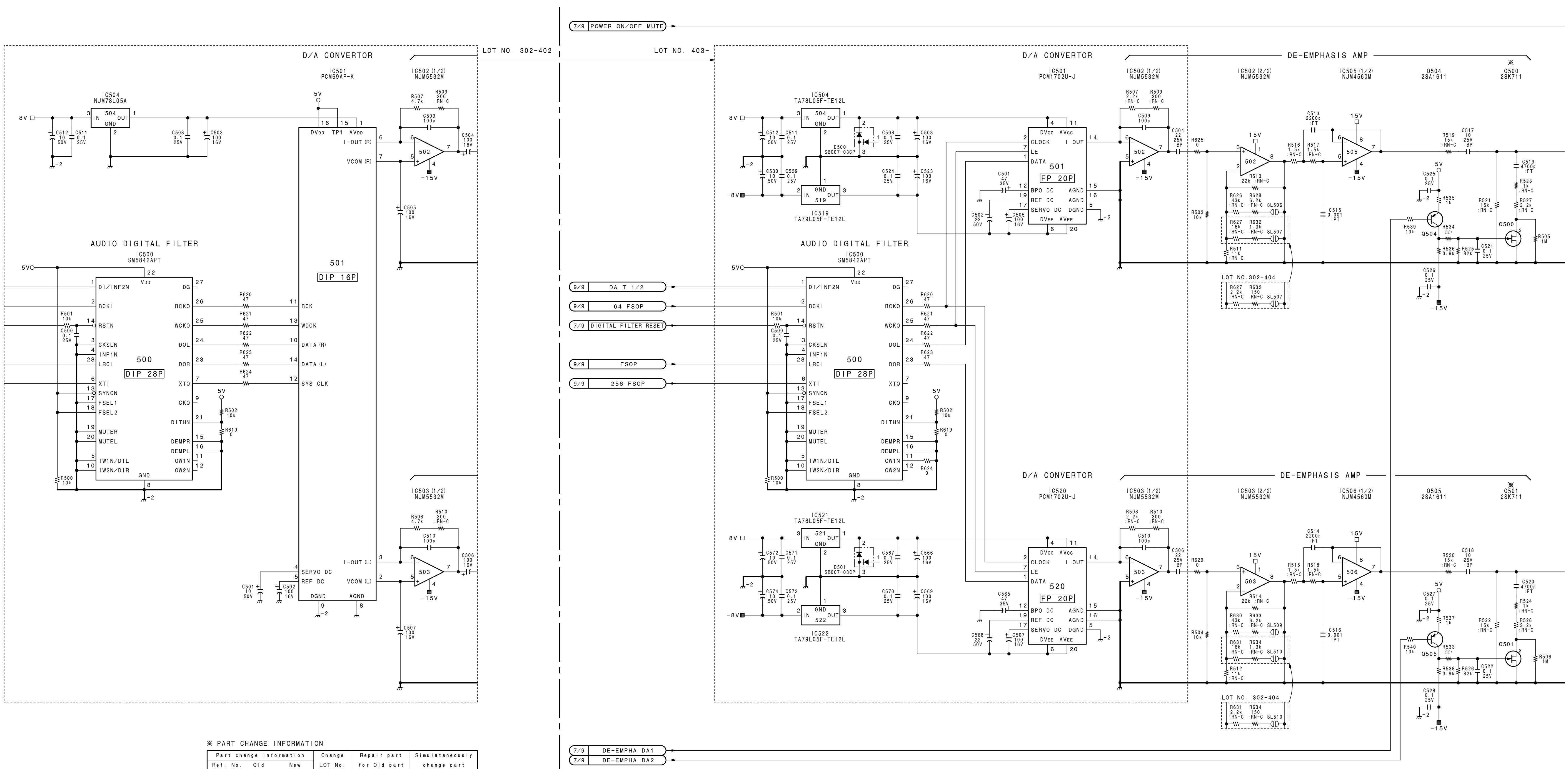

※ PART CHANGE INFORMATION

Part change information			Change LOT No.	Repair part for Old part	Simulataneously change part
Ref. No.	Old	New			
C553	10 50V →	100 16V	310	100 16V	
C554	10 50V →	100 16V	310	100 16V	
D504 D505 D506 D507	DA204U → 1SS302 →	1SS302 MA143A	311 806	MA143A	D504-507, D704-707, D907-910
Q500	2SK300 →	2SK711	405	2SK711	
Q501	2SK300 →	2SK711	405	2SK711	

NOTE:
ALL RESISTORS ARE 1/10W UNLESS OTHERWISE NOTED.
ALL CAPACITORS ARE 50V UNLESS OTHERWISE NOTED.

1-24 (a)

http://getMANUAL.com

APR-1 (3/9)

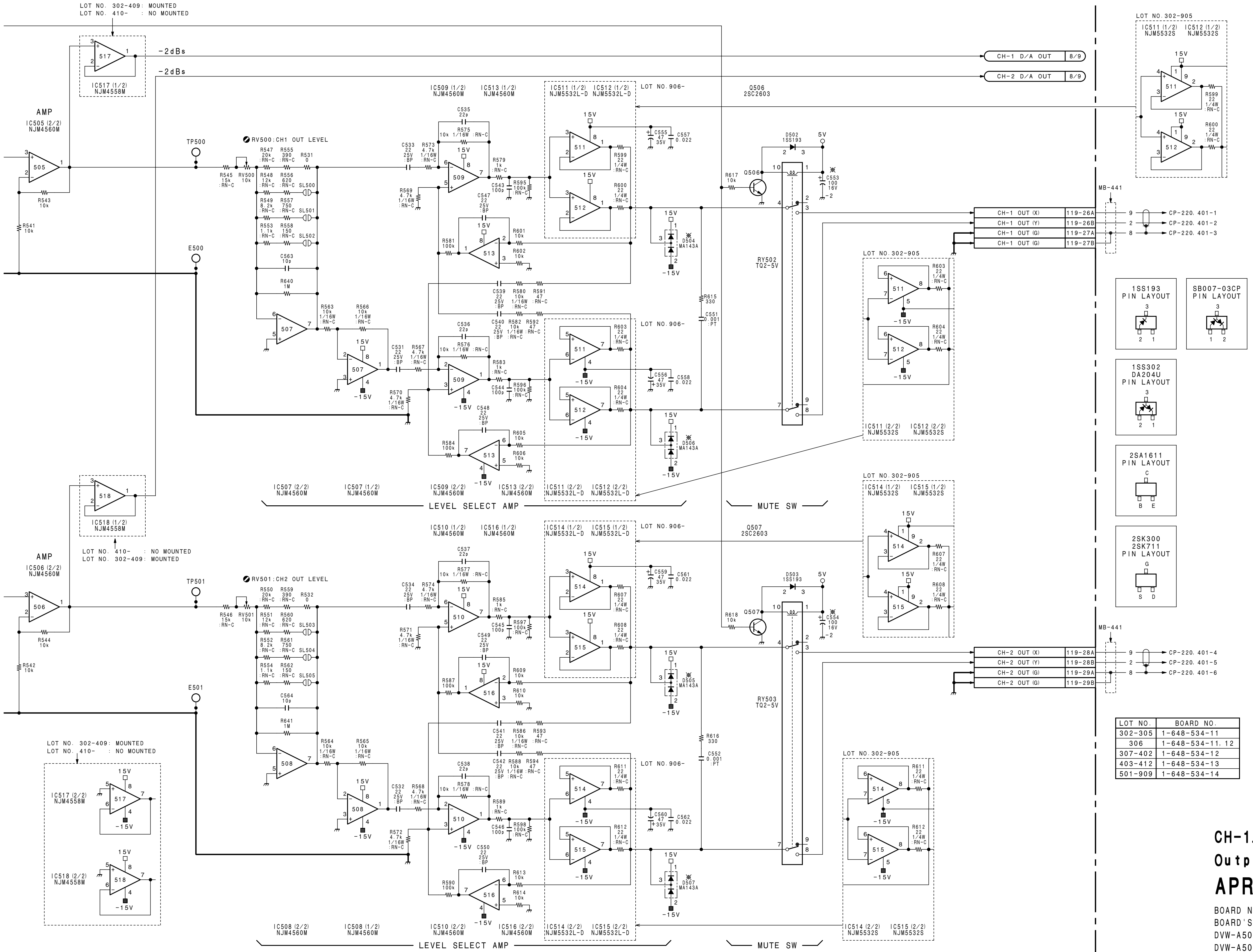

LOT NO.	BOARD NO.
302-305	1-648-534-11
306	1-648-534-11, 12
307-402	1-648-534-12
403-412	1-648-534-13
501-909	1-648-534-14

CH-1/CH-2 D/A Convert & Output Drive

APR-1 BOARD (3/9)

BOARD NO. 1-648-534-11, 12, 13, 14
BOARD'S LOT NO. 302-909
DVW-A500 (J, UC) : APR-1 MCB
DVW-A500P (EK) : APR-1P MCB
DVW-A500P (UC) : APR-1PG MCB
DVW-500 (J, UC) : APR-1 MCB
DVW-500P (EK) : APR-1G MCB
DVW-500P (UC) : APR-1PG MCB

DVW-APR1-ALL-REC-S/M-04

1-25 (a)

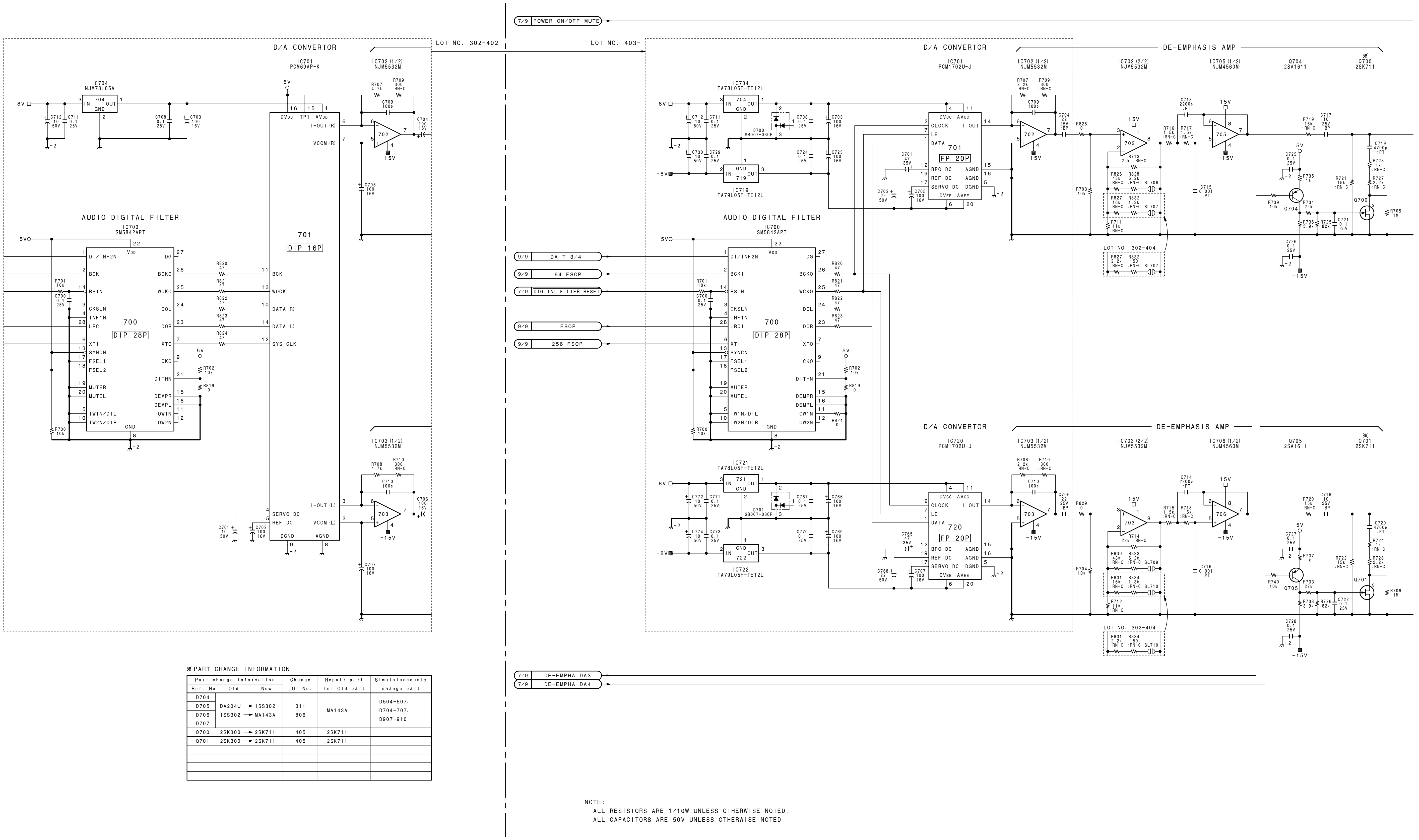

※PART CHANGE INFORMATION

Part change information			Change	Repair part	Simulataneously
Ref. No.	Old	New	LOT No.	for Old part	change part
D704					
D705	DA204U → 1SS302		311	MA143A	D504-507,
D706	1SS302 → MA143A		806		D704-707,
D707					D907-910
Q700	2SK300 → 2SK711		405	2SK711	
Q701	2SK300 → 2SK711		405	2SK711	

NOTE:
ALL RESISTORS ARE 1/10W UNLESS OTHERWISE NOTED.
ALL CAPACITORS ARE 50V UNLESS OTHERWISE NOTED.

 APR-1 (4/9)

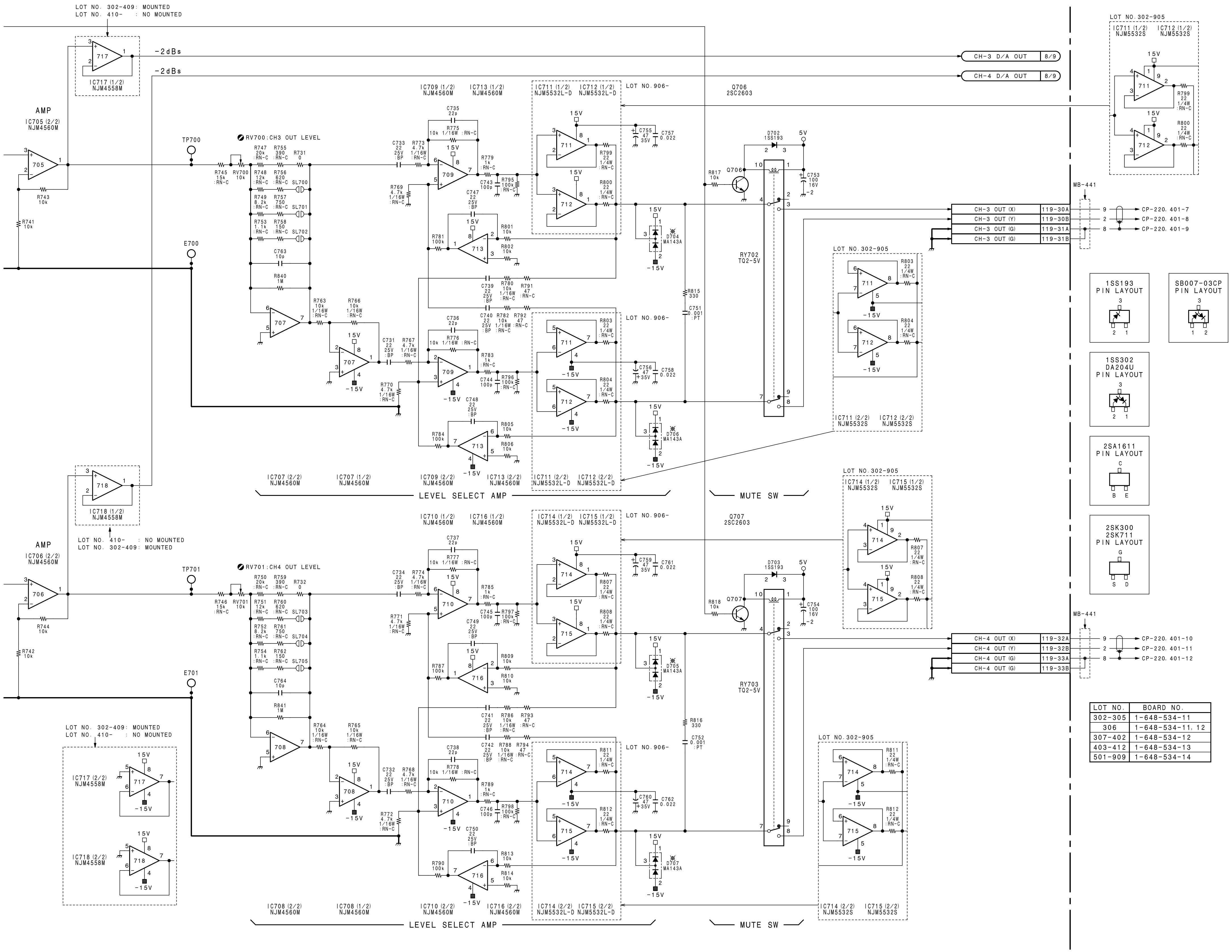

LOT NO.	BOARD NO.
302-305	1-648-534-11
306	1-648-534-11, 12
307-402	1-648-534-12
403-412	1-648-534-13
501-909	1-648-534-14

CH-3/CH-4 D/A Convert & Output Drive

APR-1 BOARD (4/9)

BOARD NO. 1-648-534-11, 12, 13, 14
BOARD'S LOT NO. 302-909
DVW-A500 (J, UC) : APR-1 MCB
DVW-A500P (EK) : APR-1P MCB
DVW-A500P (UC) : APR-1PG MCB
DVW-500 (J, UC) : APR-1 MCB
DVW-500P (EK) : APR-1G MCB
DVW-500P (UC) : APR-1PG MCB

DVW-APR1-ALL-REC-S/M-04

APR-1 (5/9)

※ PART CHANGE INFORMATION

Part change information			Change LOT No.	Repair part for Old part	Simulataneously change part
Ref. No.	Old	New			
D907				MA143A	D504-507, D704-707, D907-910
D908	DA204U	→ 1SS302	311		
D909	1SS302	→ MA143A	806		
D910					
Q900					
Q901	2SK300	→ 2SK711	405	2SK711	
Q1000					
Q1001					

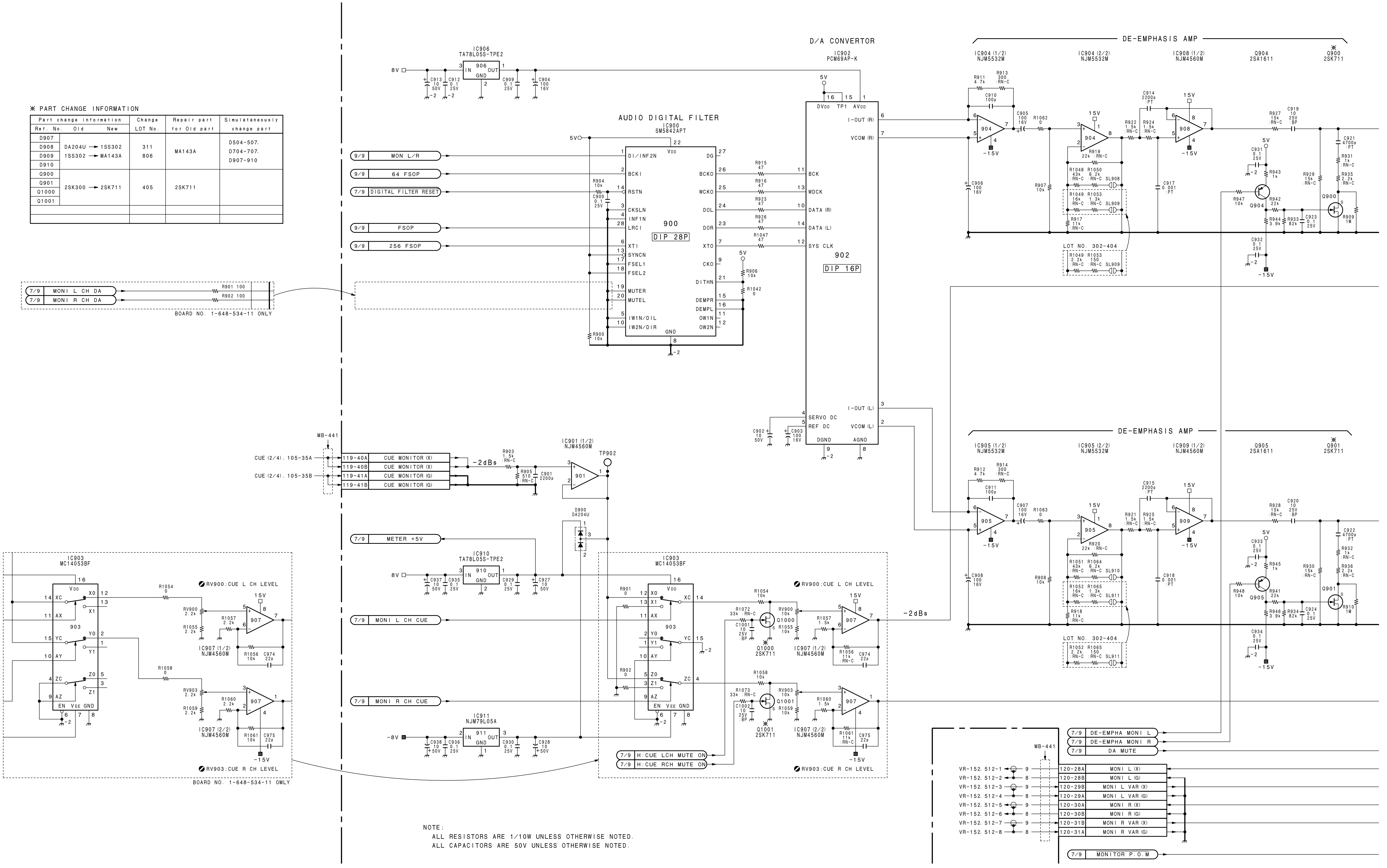

NOTE:
ALL RESISTORS ARE 1/10W UNLESS OTHERWISE NOTED.
ALL CAPACITORS ARE 50V UNLESS OTHERWISE NOTED.

1-28 (a)

A B C D E F G H

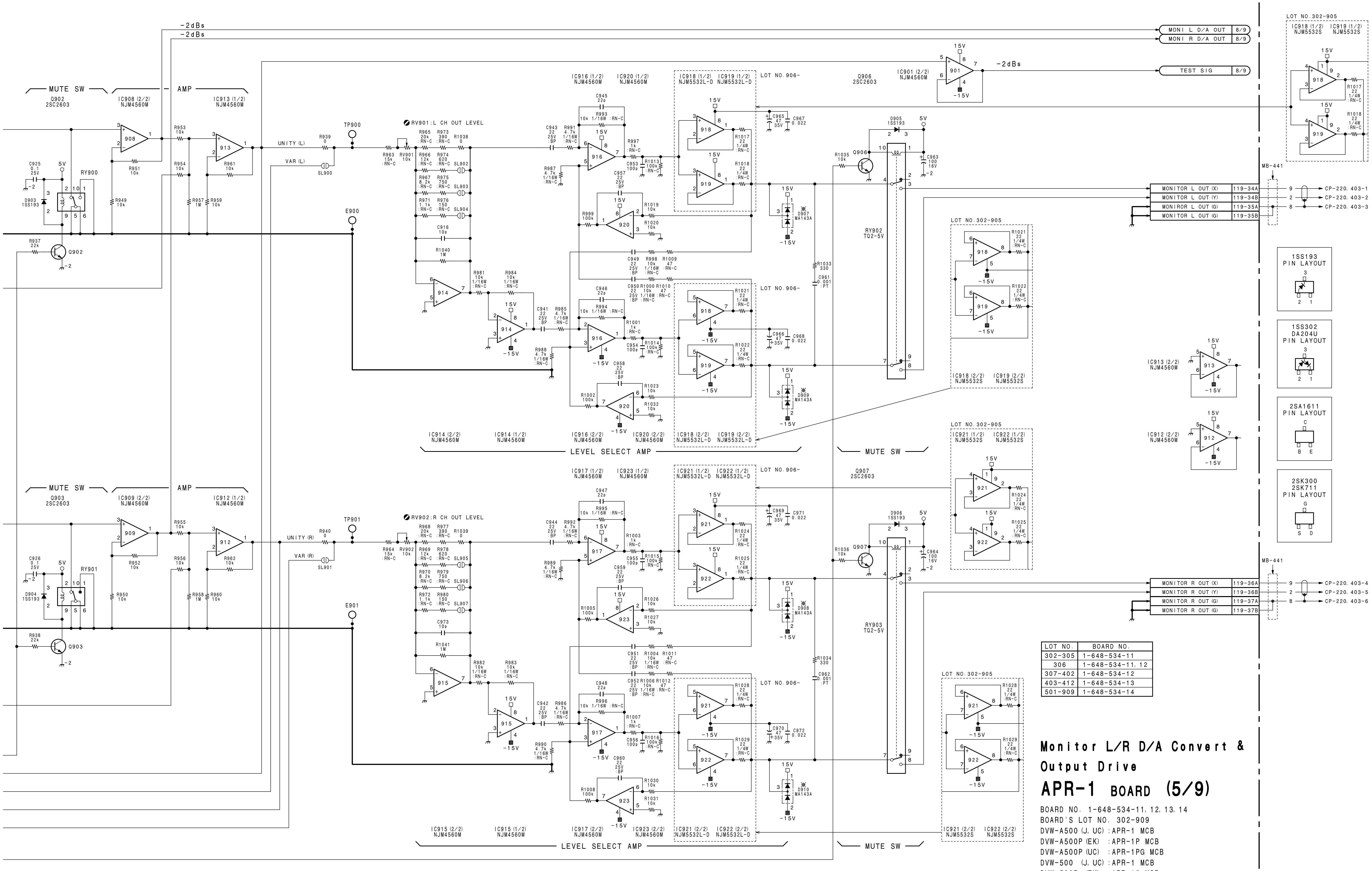

LOT NO.	BOARD NO.
302-305	1-648-534-11
306	1-648-534-11, 12
307-402	1-648-534-12
403-412	1-648-534-13
501-909	1-648-534-14

Monitor L/R D/A Convert & Output Drive

APR-1 BOARD (5/9)

BOARD NO. 1-648-534-11, 12, 13, 14
BOARD'S LOT NO. 302-909
DVW-A500 (J, UC) :APR-1 MCB
DVW-A500P (EK) :APR-1P MCB
DVW-A500P (UC) :APR-1PG MCB
DVW-500 (J, UC) :APR-1 MCB
DVW-500P (EK) :APR-1G MCB
DVW-500P (UC) :APR-1PG MCB

DVW-APR1-ALL-REC-S/M-04

I J K L M N O P

APR-1 (6/9)

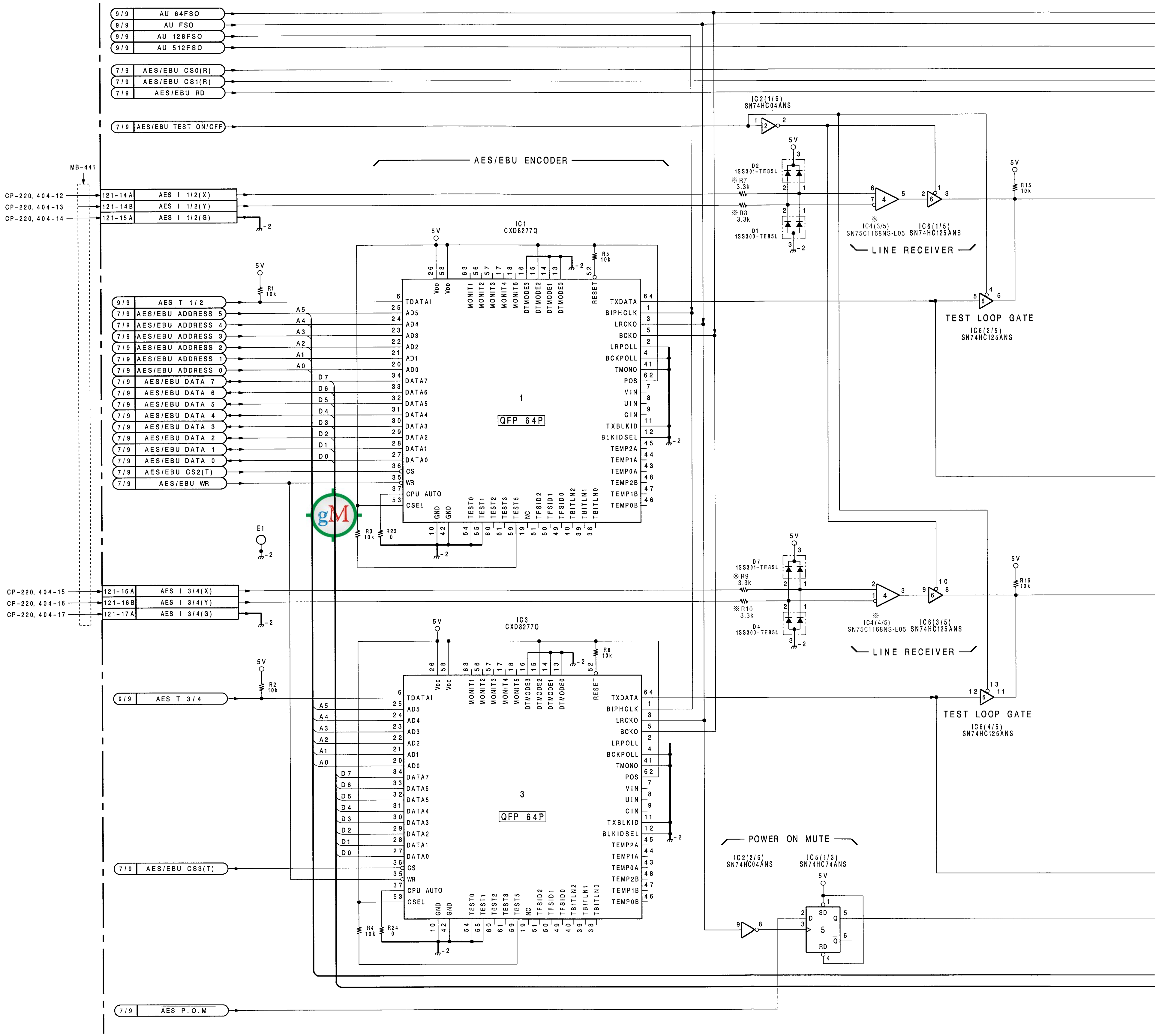

1
2
3
4
5

1-30 (a)

A B C D E F G H

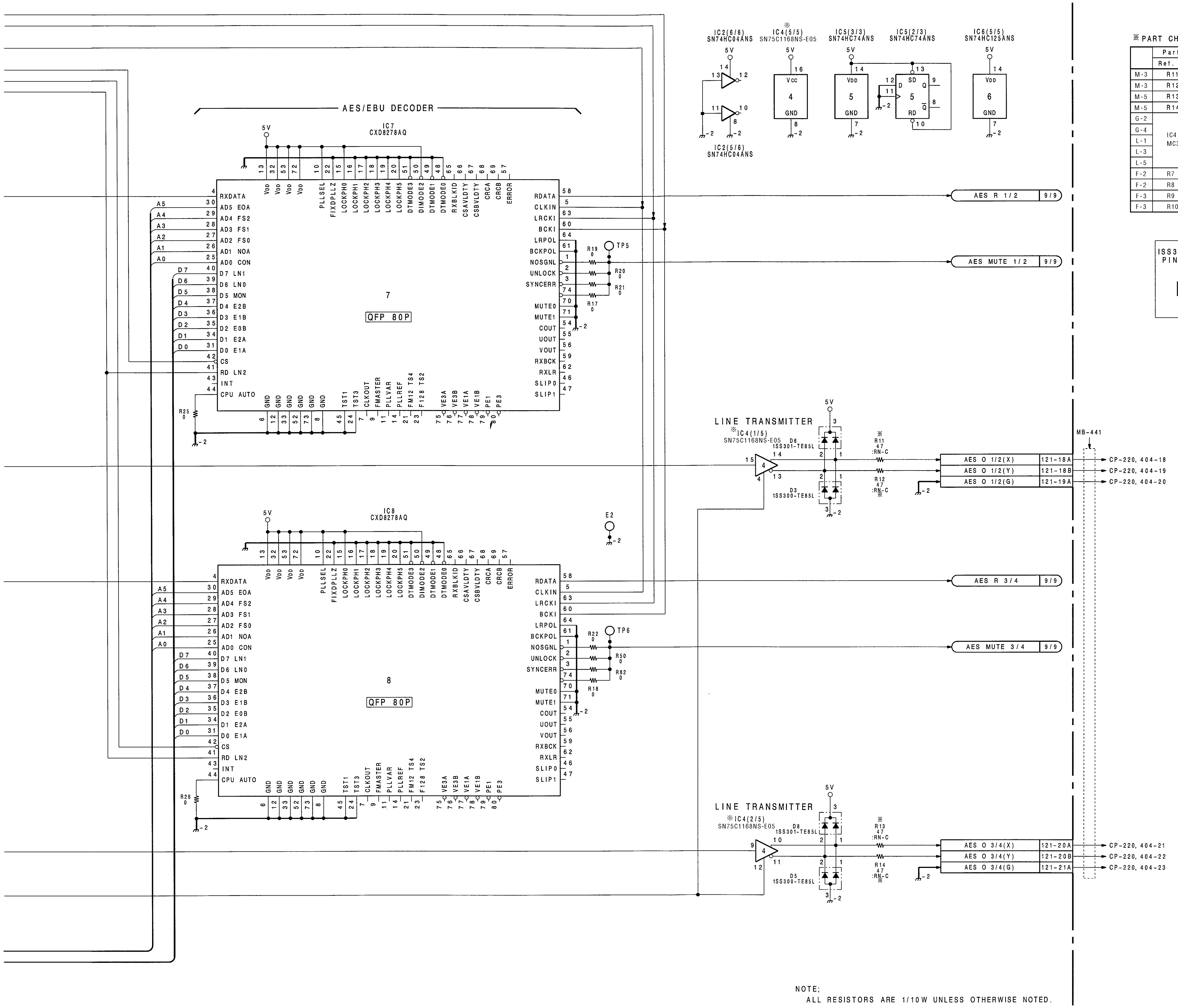

※PART CHANGE INFORMATION　旧部品に対する補修部品　同時に交換する部品

	Part change information Ref. No.	Old	New	Change LOT No.	Repair part for Old part	Simulataneously change part
M-3	R11	10 →	47	306	47	R12, R13, R14
M-3	R12	10 →	47	306	47	R11, R13, R14
M-5	R13	10 →	47	306	47	R11, R12, R14
M-5	R14	10 →	47	306	47	R11, R12, R13
G-2, G-4, L-1, L-3, L-5	IC4	MC34051M →	SN75C1168NS-E05	804	SN75C1168NS-E05	R7-R10
F-2	R7	10 →	3.3k	804	3.3k	IC4, R8, R9, R10
F-2	R8	10 →	3.3k	804	3.3k	IC4, R7, R9, R10
F-3	R9	10 →	3.3k	804	3.3k	IC4, R7, R8, R10
F-3	R10	10 →	3.3k	804	3.3k	IC4, R7, R8, R9

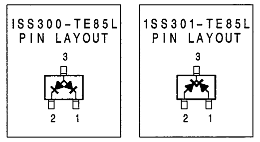

LOT NO.	BOARD NO.
302-305	1-648-534-11
306	1-648-534-11, 12
307-402	1-648-534-12
403-412	1-648-534-13
501-909	1-648-534-14

NOTE;
ALL RESISTORS ARE 1/10W UNLESS OTHERWISE NOTED.

AES/EBU Encode/Decode
APR-1 BOARD (6/9)

BOARD NO. 1-648-534-11, 12, 13, 14
BOARD' S LOT NO. 302-909
DVW-A500(J, UC) :APR-1 MCB
DVW-A500P(EK) :APR-1P MCB
DVW-A500P(UC) :APR-1PG MCB
DVW-500 (J, UC) :APR-1 MCB
DVW-500P (EK) :APR-1P MCB
DVW-500P (UC) :APR-1PG MCB

DVW-APR1-ALL-REC-S/M-04

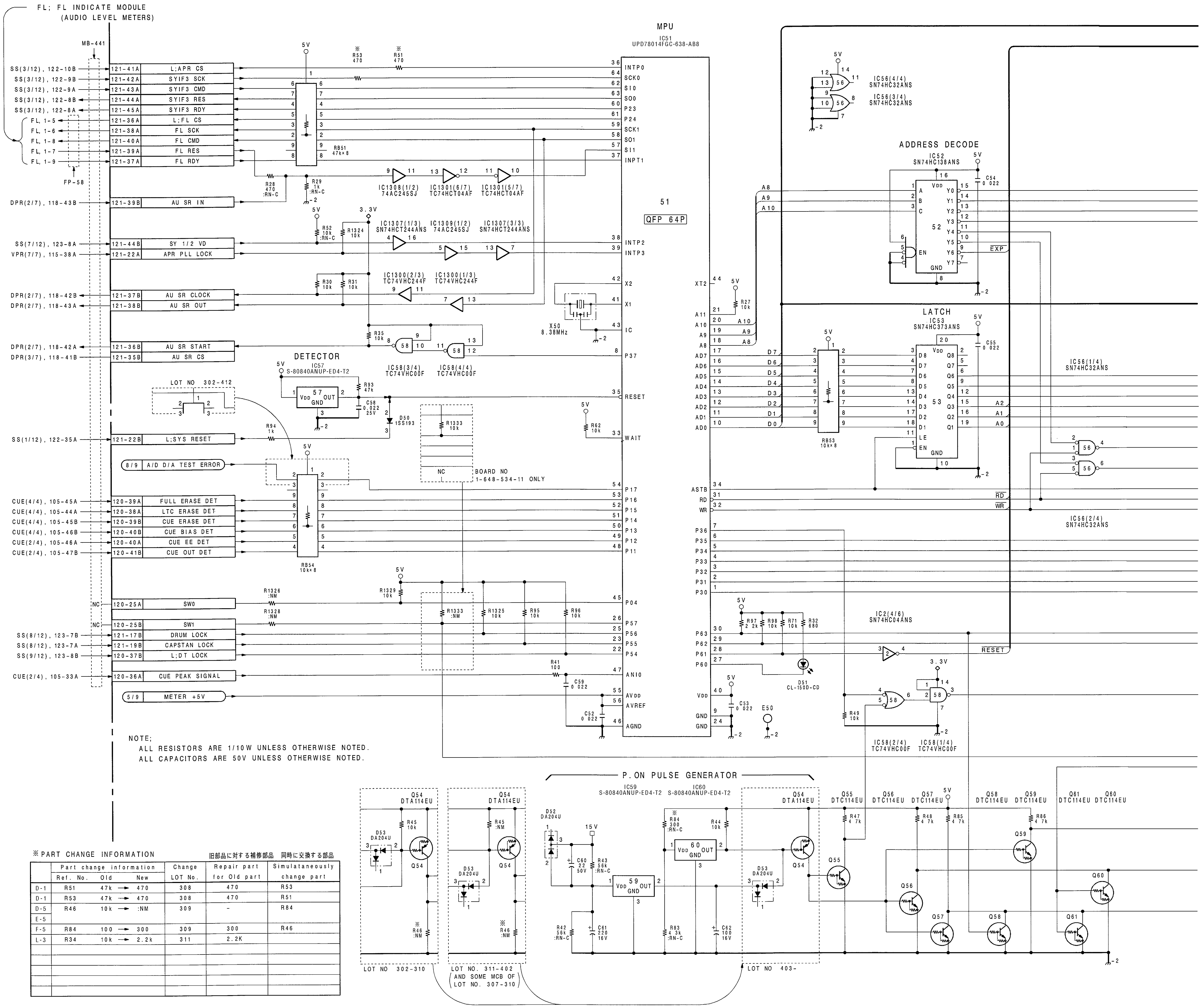

NOTE;
ALL RESISTORS ARE 1/10W UNLESS OTHERWISE NOTED.
ALL CAPACITORS ARE 50V UNLESS OTHERWISE NOTED.

※PART CHANGE INFORMATION

	Part change information			Change	Repair part	Simulataneously
					旧部品に対する補修部品	同時に交換する部品
	Ref. No.	Old	New	LOT No.	for Old part	change part
D-1	R51	47k	→ 470	308	470	R53
D-1	R53	47k	→ 470	308	470	R51
D-5	R46	10k	→ :NM	309	-	R84
E-5						
F-5	R84	100	→ 300	309	300	R46
L-3	R34	10k	→ 2.2k	311	2.2K	

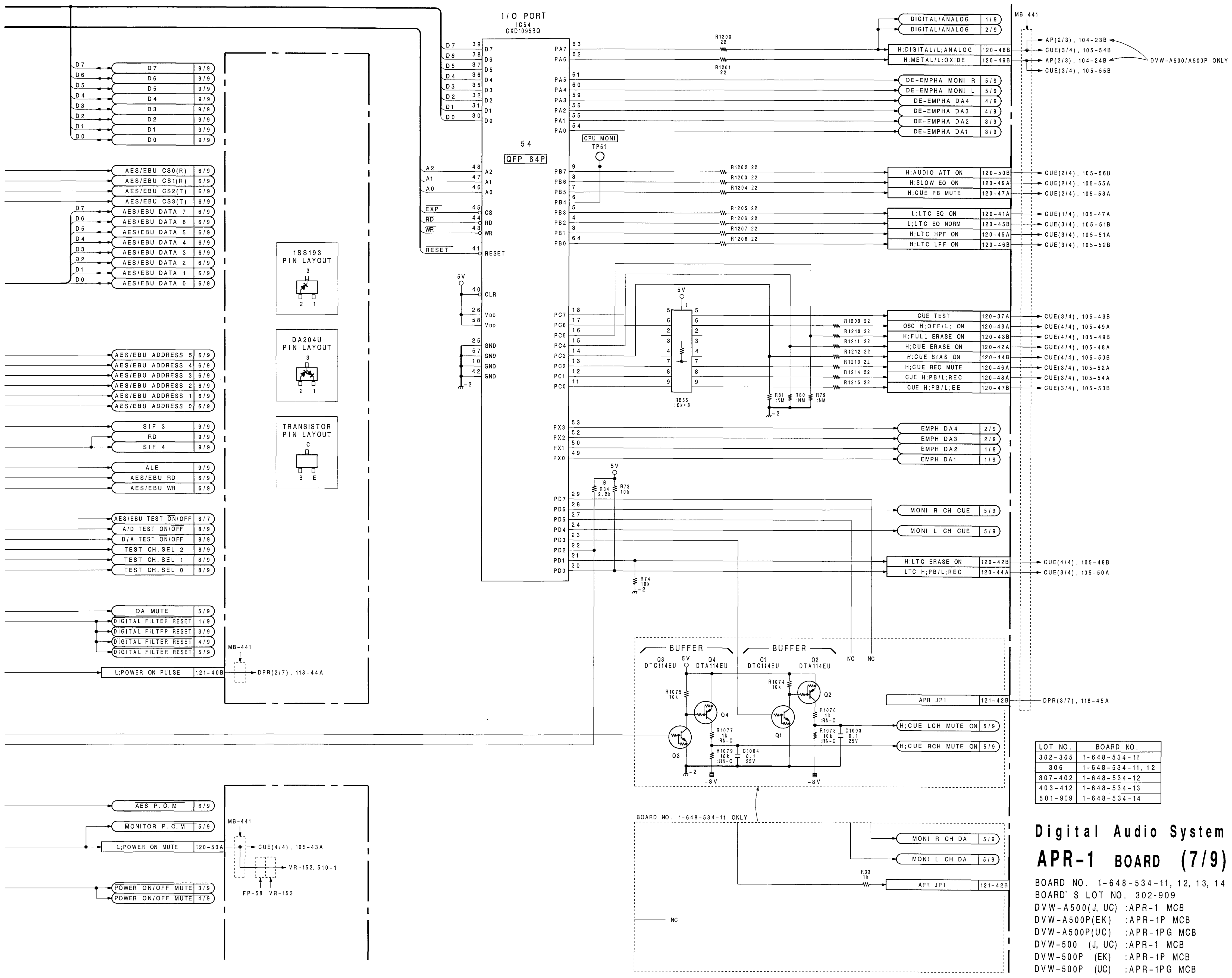

LOT NO.	BOARD NO.
302-305	1-648-534-11
306	1-648-534-11, 12
307-402	1-648-534-12
403-412	1-648-534-13
501-909	1-648-534-14

Digital Audio System Control

APR-1 BOARD (7/9)

BOARD NO. 1-648-534-11, 12, 13, 14
BOARD' S LOT NO. 302-909
DVW-A500(J, UC) :APR-1 MCB
DVW-A500P(EK) :APR-1P MCB
DVW-A500P(UC) :APR-1PG MCB
DVW-500 (J, UC) :APR-1 MCB
DVW-500P (EK) :APR-1P MCB
DVW-500P (UC) :APR-1PG MCB

DVW-APR1-ALL-REC-S/M-04

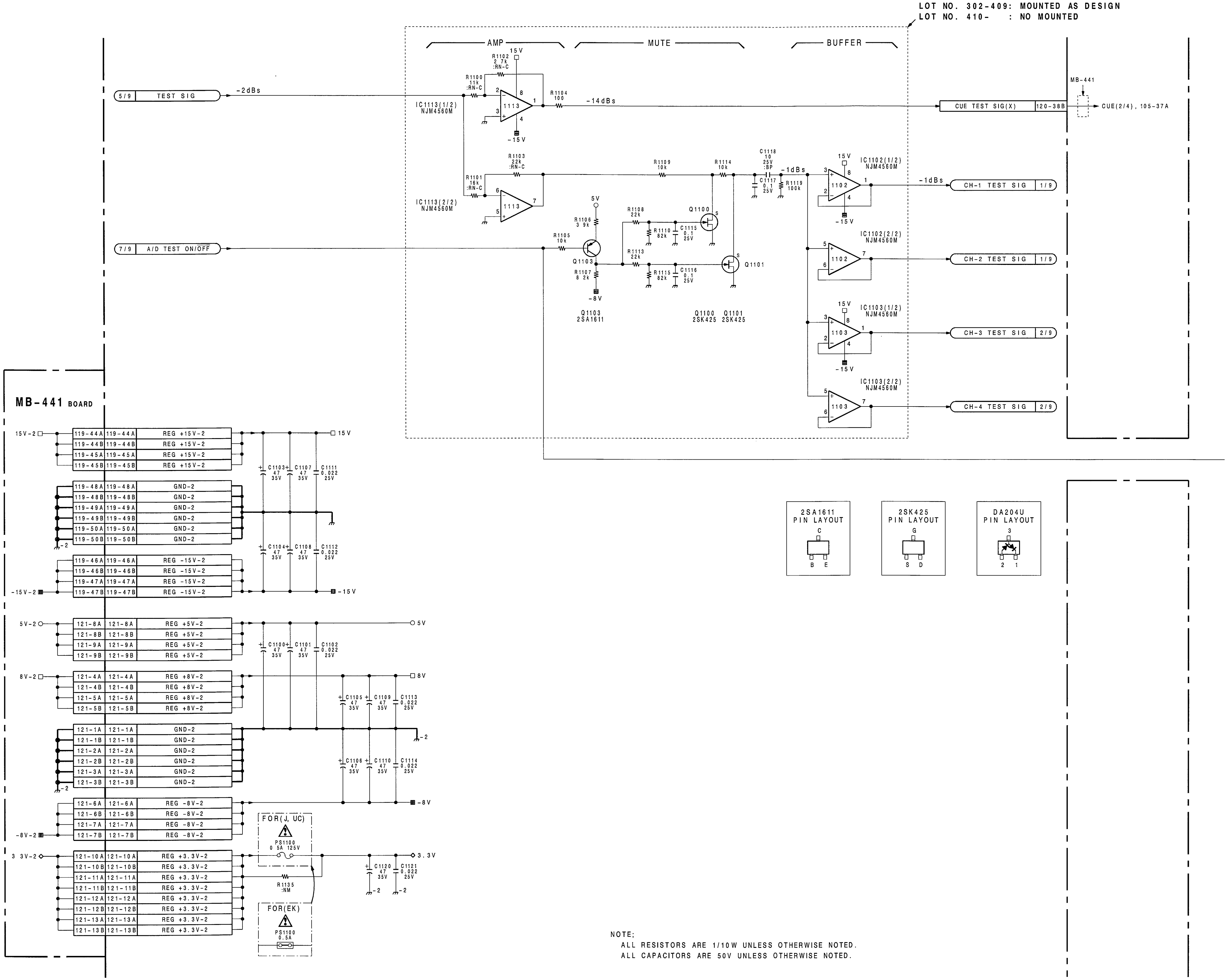
LOT NO. 302-409: MOUNTED AS DESIGN
LOT NO. 410- : NO MOUNTED
AMP
MUTE
BUFFER
TEST SIG
A/D TEST ON/OFF
CUE TEST SIG(X)
CH-1 TEST SIG
CH-2 TEST SIG
CH-3 TEST SIG
CH-4 TEST SIG
MB-441 BOARD
2SA1611 PIN LAYOUT
2SK425 PIN LAYOUT
DA204U PIN LAYOUT
FOR(J, UC)
FOR(EK)
NOTE;
ALL RESISTORS ARE 1/10W UNLESS OTHERWISE NOTED.
ALL CAPACITORS ARE 50V UNLESS OTHERWISE NOTED.

http://getMANUAL.com

LOT NO. 302-409: MOUNTED AS DESIGN
LOT NO. 410- : NO MOUNTED

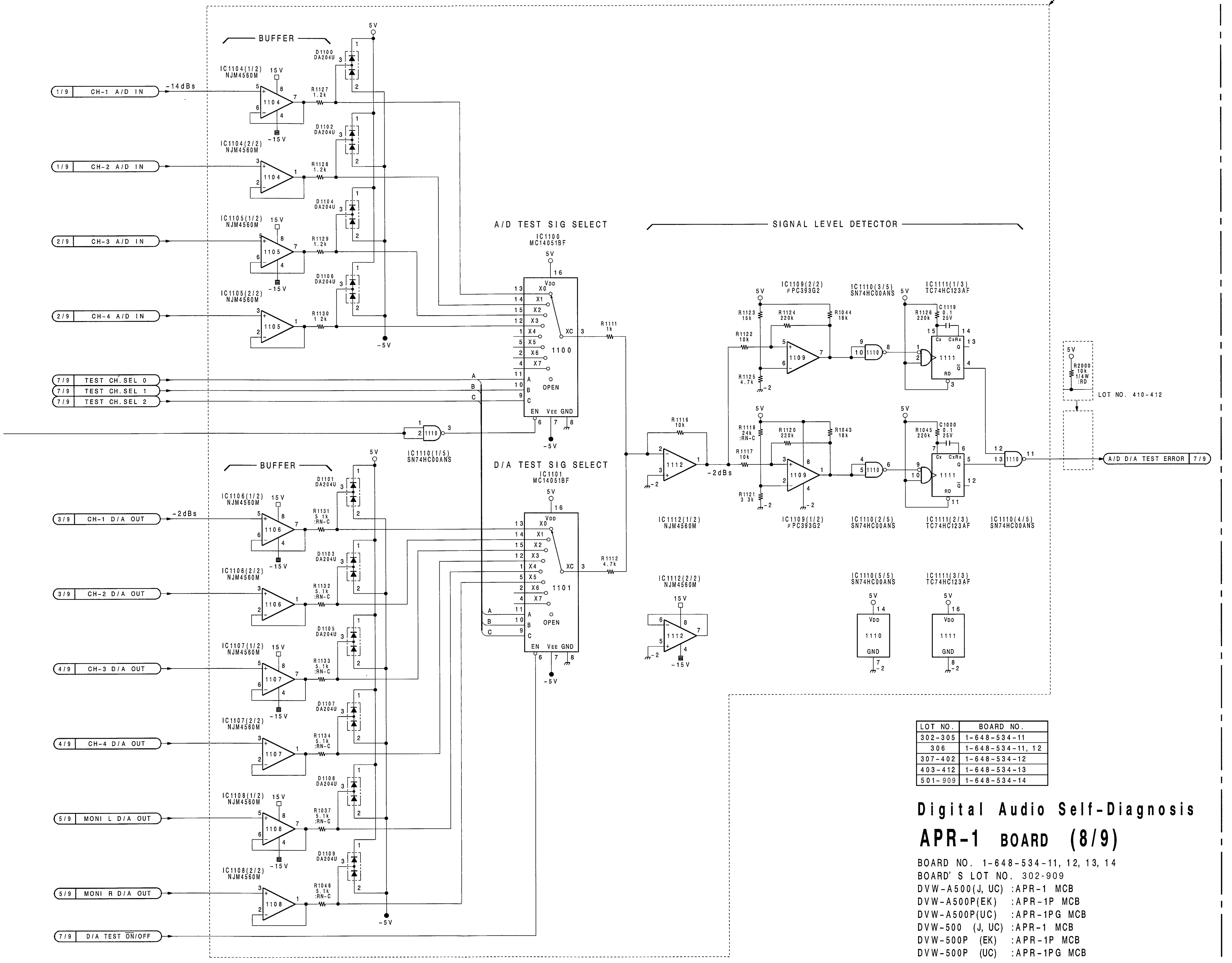

LOT NO.	BOARD NO.
302-305	1-648-534-11
306	1-648-534-11, 12
307-402	1-648-534-12
403-412	1-648-534-13
501-909	1-648-534-14

Digital Audio Self-Diagnosis

APR-1 BOARD (8/9)

BOARD NO. 1-648-534-11, 12, 13, 14
BOARD' S LOT NO. 302-909
DVW-A500(J, UC) :APR-1 MCB
DVW-A500P(EK) :APR-1P MCB
DVW-A500P(UC) :APR-1PG MCB
DVW-500 (J, UC) :APR-1 MCB
DVW-500P (EK) :APR-1P MCB
DVW-500P (UC) :APR-1PG MCB

DVW-APR1-ALL-REC-S/M-04

 APR-1 (9/9)

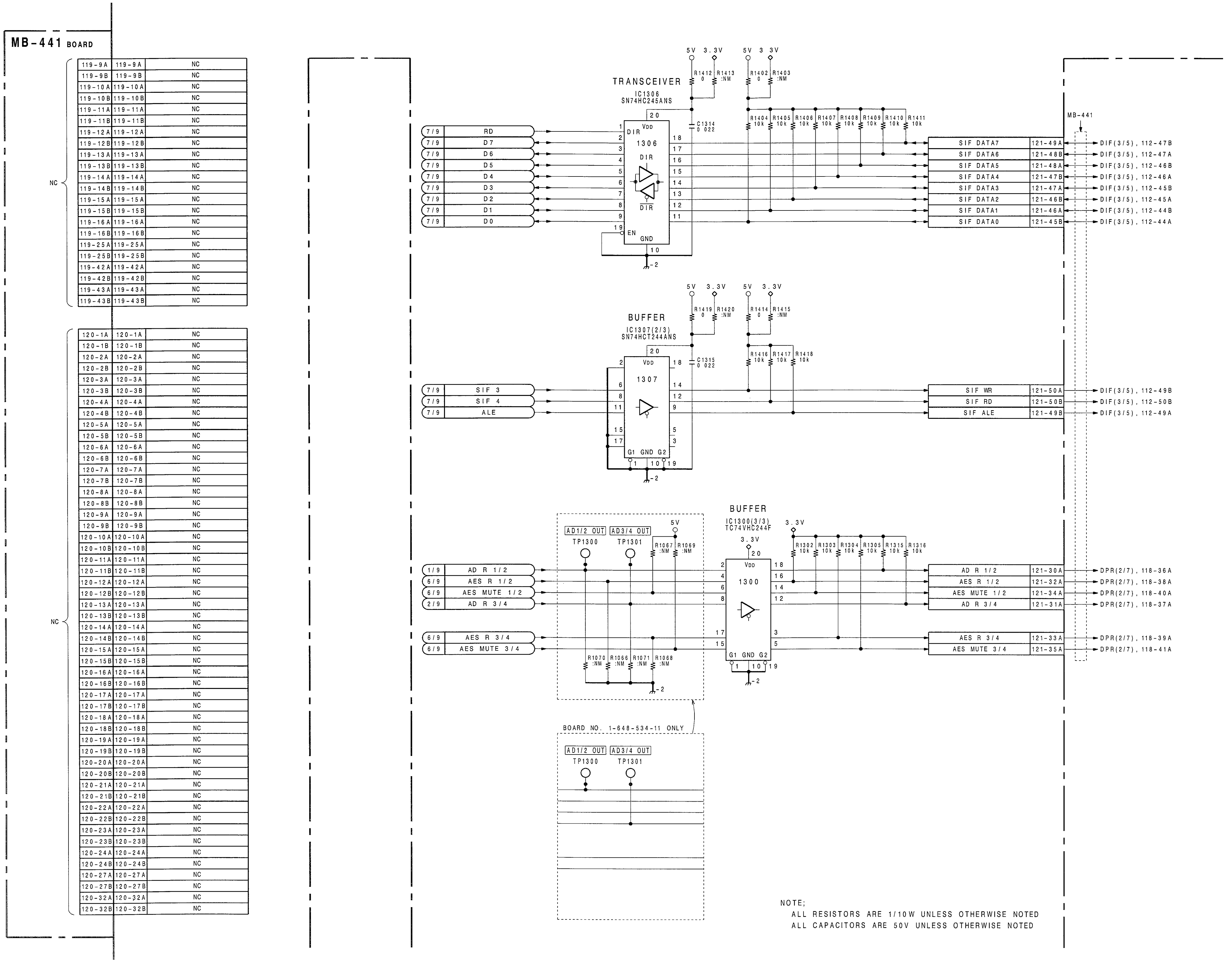

NOTE;
ALL RESISTORS ARE 1/10W UNLESS OTHERWISE NOTED
ALL CAPACITORS ARE 50V UNLESS OTHERWISE NOTED

 1-36 (a)

A B C D E F G H

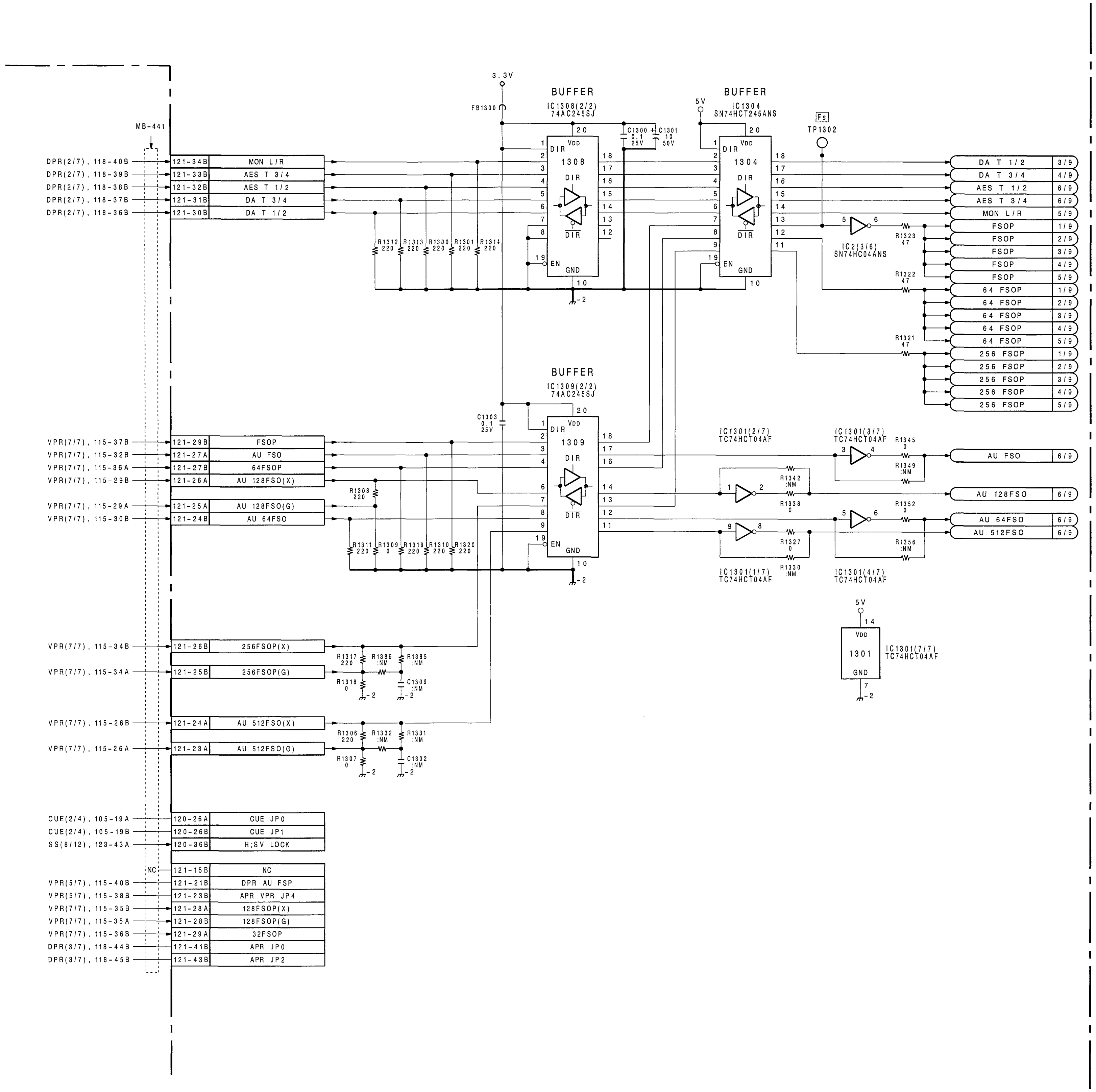

LOT NO.	BOARD NO.
302-305	1-648-534-11
306	1-648-534-11, 12
307-402	1-648-534-12
403-412	1-648-534-13
501-909	1-648-534-14

Bus Buffer

APR-1 BOARD (9/9)

BOARD NO. 1-648-534-11, 12, 13, 14
BOARD' S LOT NO. 302-909
DVW-A500(J, UC) :APR-1 MCB
DVW-A500P(EK) :APR-1P MCB
DVW-A500P(UC) :APR-1PG MCB
DVW-500 (J, UC) :APR-1 MCB
DVW-500P (EK) :APR-1P MCB
DVW-500P (UC) :APR-1PG MCB

DVW-APR1-ALL-REC-S/M-04

① TP108(M-3) STOP (E-E) mode
TP108(M-3)(TRIG)

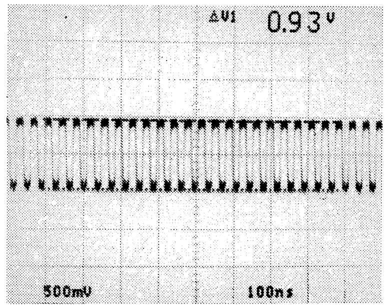

② TP100(E-5) STOP (E-E) mode
TP101(E-5) STOP (E-E) mode
TP102(E-6)(TRIG)

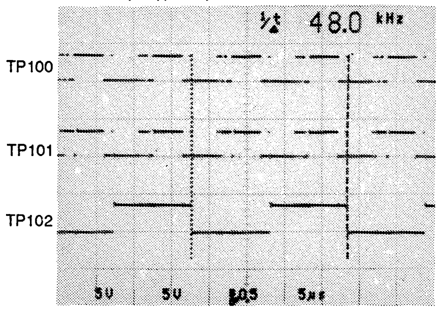

DIF-16 Board -A Side-

Measurement Condition
MODE : STOP (E-E) mode

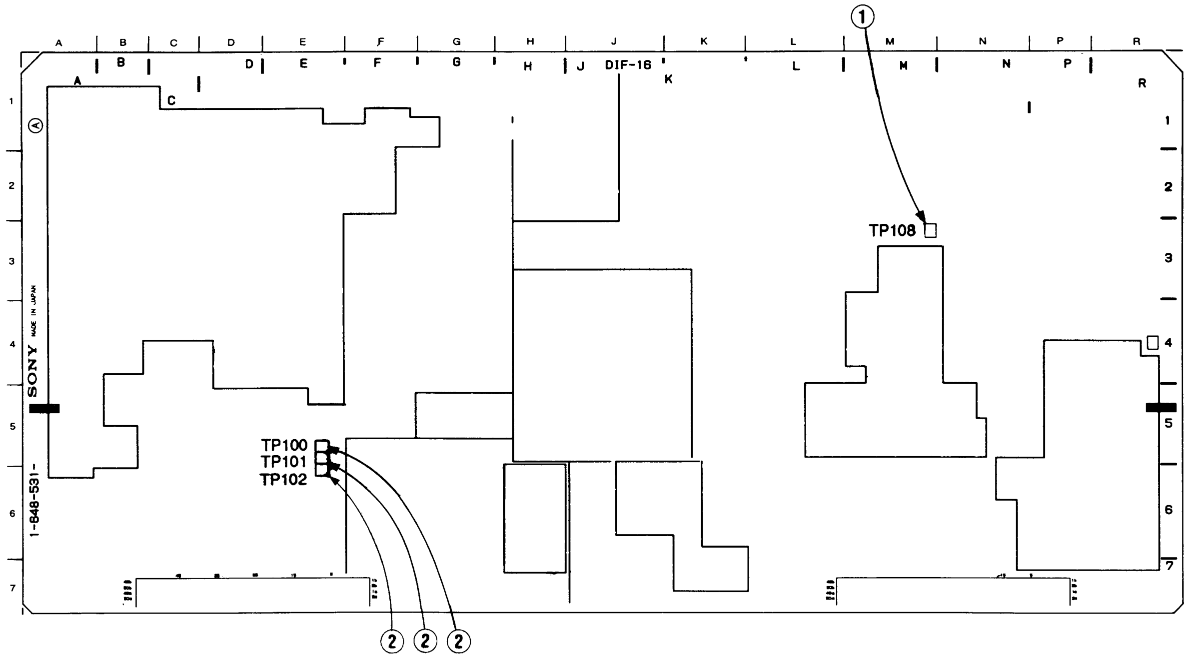

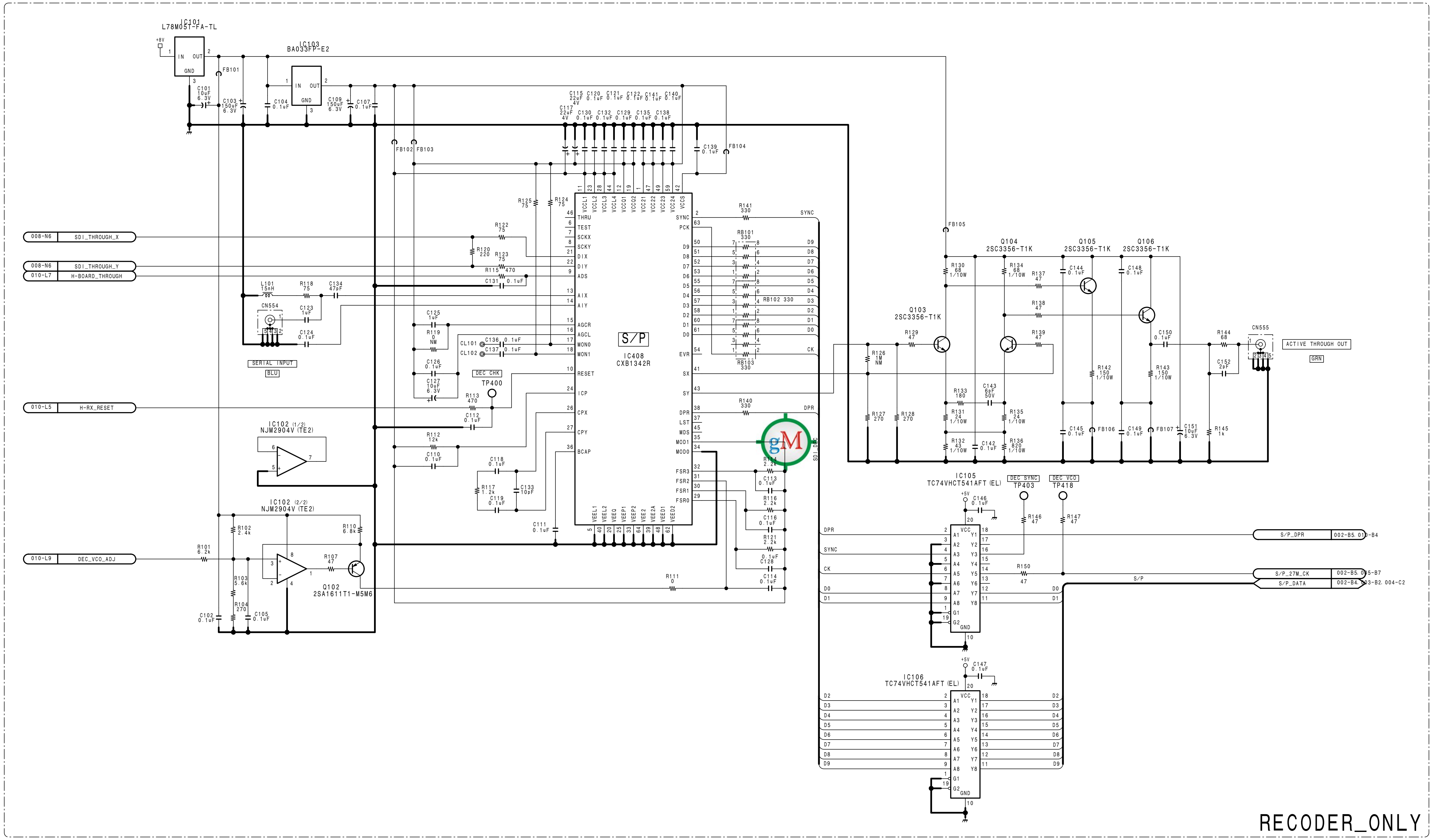

1
2
3
4
5

Serial to Parallel Converter of SDI Receiver

DIF-16 BOARD (1/10)

BOARD NO. 1-648-531-16
BOARD'S LOT NO. 907-
DVW-A500 (J, UC) :DIF-16 MCB
DVW-A500P (EK) :DIF-16 MCB
DVW-A500P (UC) :DIF-16 MCB
DVW-500 (J, UC) :DIF-16 MCB
DVW-500P (EK) :DIF-16 MCB
DVW-500P (UC) :DIF-16 MCB
DVW-A500_DIF-16_006_1

A B C D E F G H

1
2
3
4
5

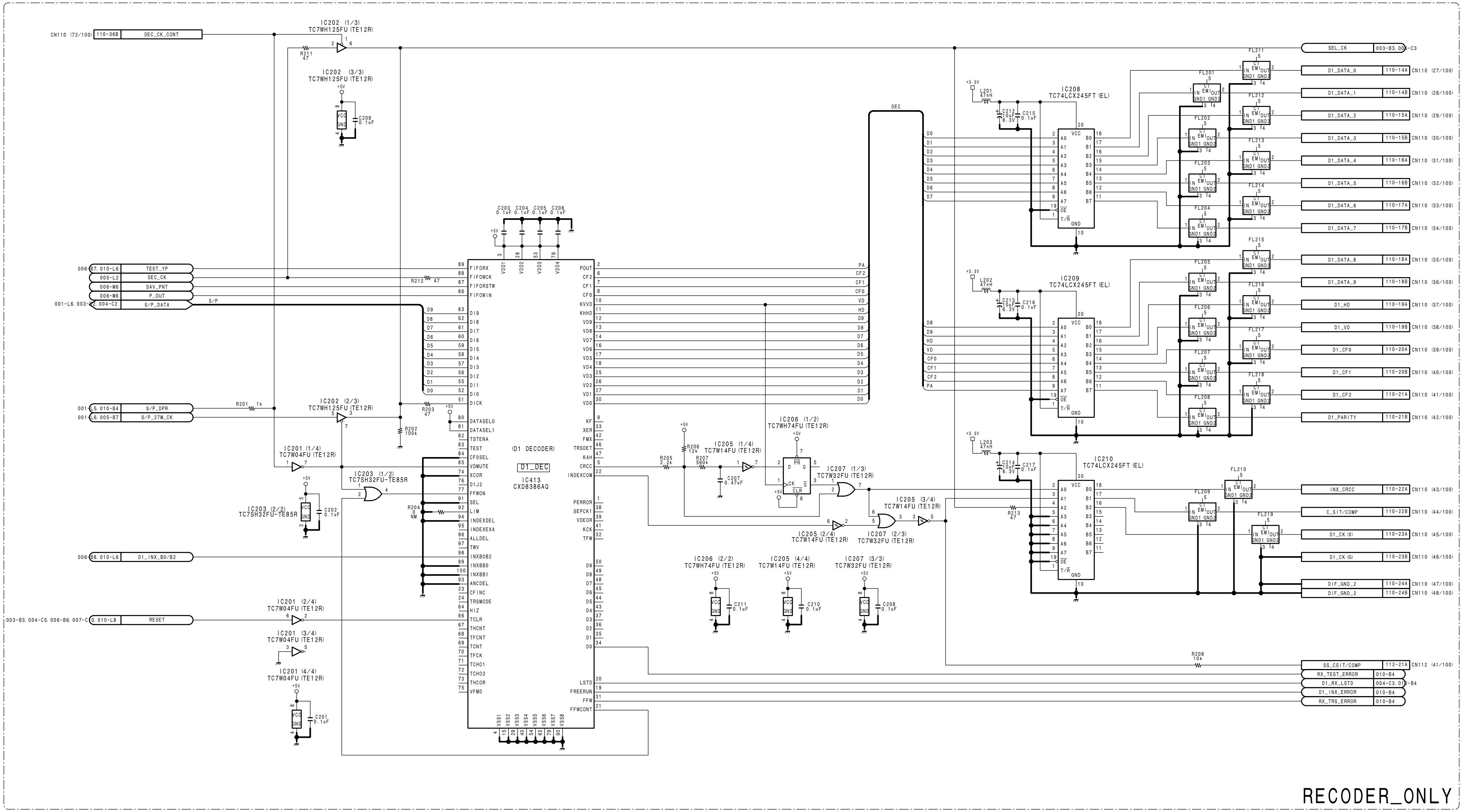

D1 Decoder of SDI Receiver

DIF-16 BOARD (2/10)

BOARD NO. 1-648-531-16
BOARD'S LOT NO. 907-
DVW-A500 (J, UC) : DIF-16 MCB
DVW-A500P (EK) : DIF-16 MCB
DVW-A500P (UC) : DIF-16 MCB
DVW-500 (J, UC) : DIF-16 MCB
DVW-500P (EK) : DIF-16 MCB
DVW-500P (UC) : DIF-16 MCB

DVW-A500_DIF-16_006_2

A B C D E F G H

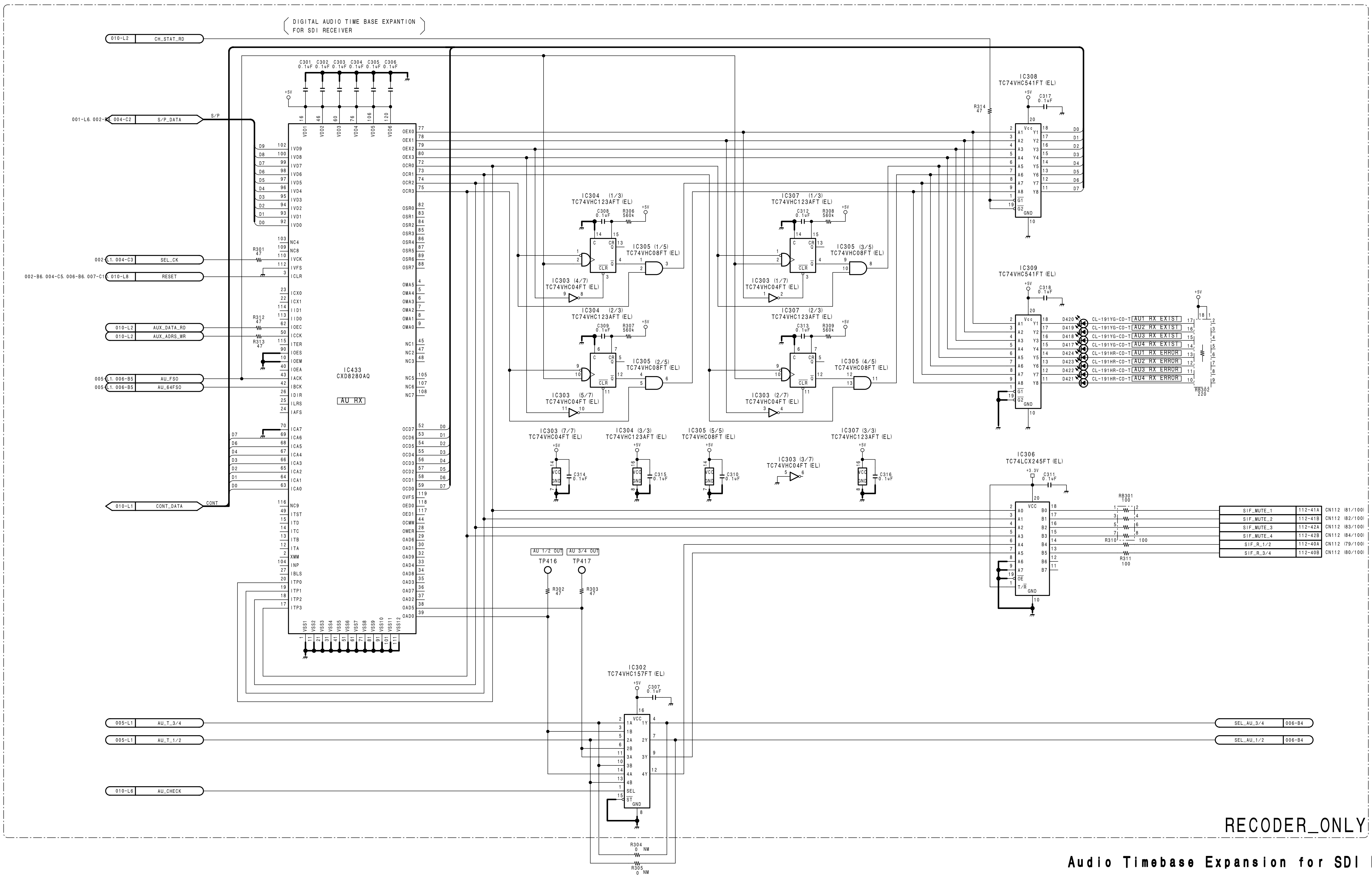

Audio Timebase Expansion for SDI Receiver

DIF-16 BOARD (3/10)

BOARD NO. 1-648-531-16
BOARD'S LOT NO. 907-
DVW-A500 (J, UC) : DIF-16 MCB
DVW-A500P (EK) : DIF-16 MCB
DVW-A500P (UC) : DIF-16 MCB
DVW-500 (J, UC) : DIF-16 MCB
DVW-500P (EK) : DIF-16 MCB
DVW-500P (UC) : DIF-16 MCB

DVW-A500_DIF-16_006_3

DIF-16 (4/10)

1
2
3
4
5

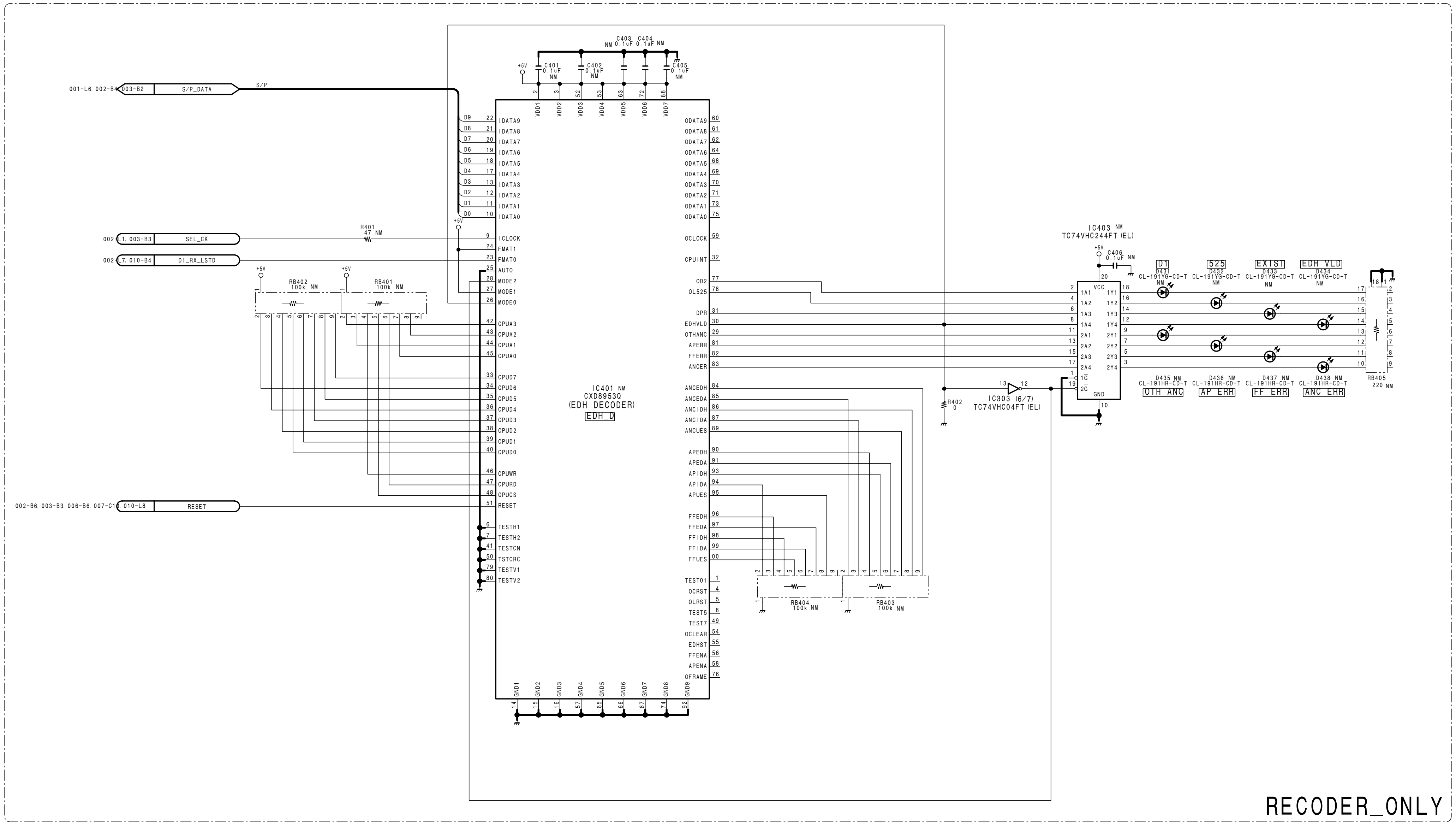

EDH Decoder of SDI Receiver

DIF-16 BOARD (4/10)

BOARD NO. 1-648-531-16
BOARD'S LOT NO. 907-
DVW-A500 (J, UC) : DIF-16 MCB
DVW-A500P (EK) : DIF-16 MCB
DVW-A500P (UC) : DIF-16 MCB
DVW-500 (J, UC) : DIF-16 MCB
DVW-500P (EK) : DIF-16 MCB
DVW-500P (UC) : DIF-16 MCB
DVW-A500_DIF-16_006_4

1-43 (c)

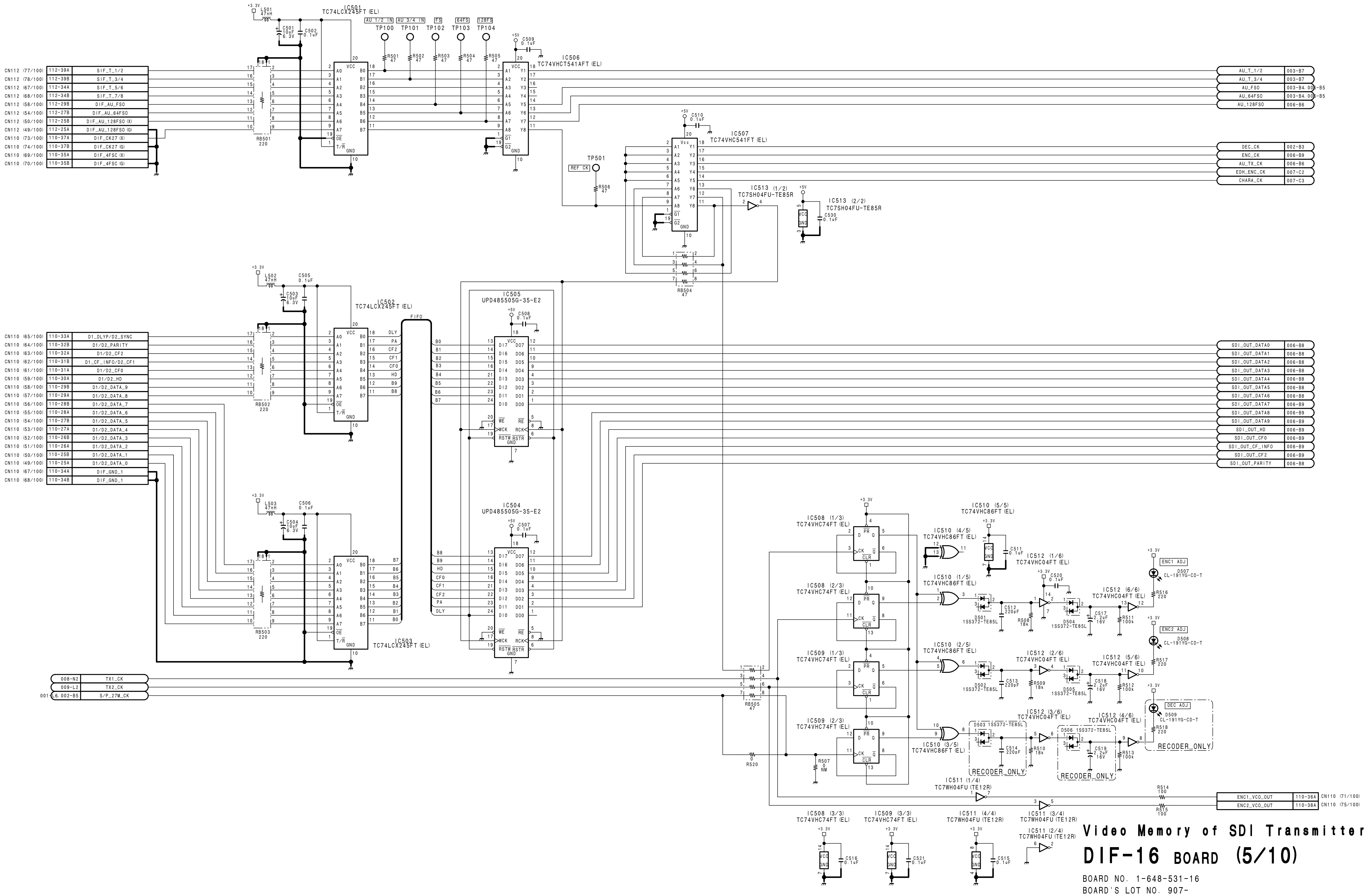

Video Memory of SDI Transmitter & Clock Driver

DIF-16 BOARD (5/10)

BOARD NO. 1-648-531-16
BOARD'S LOT NO. 907-
DVW-A500 (J, UC) :DIF-16 MCB
DVW-A500P (EK) :DIF-16 MCB
DVW-A500P (UC) :DIF-16 MCB
DVW-500 (J, UC) :DIF-16 MCB
DVW-500P (EK) :DIF-16 MCB
DVW-500P (UC) :DIF-16 MCB

DVW-A500_DIF-16_006_5

A B C D E F G H

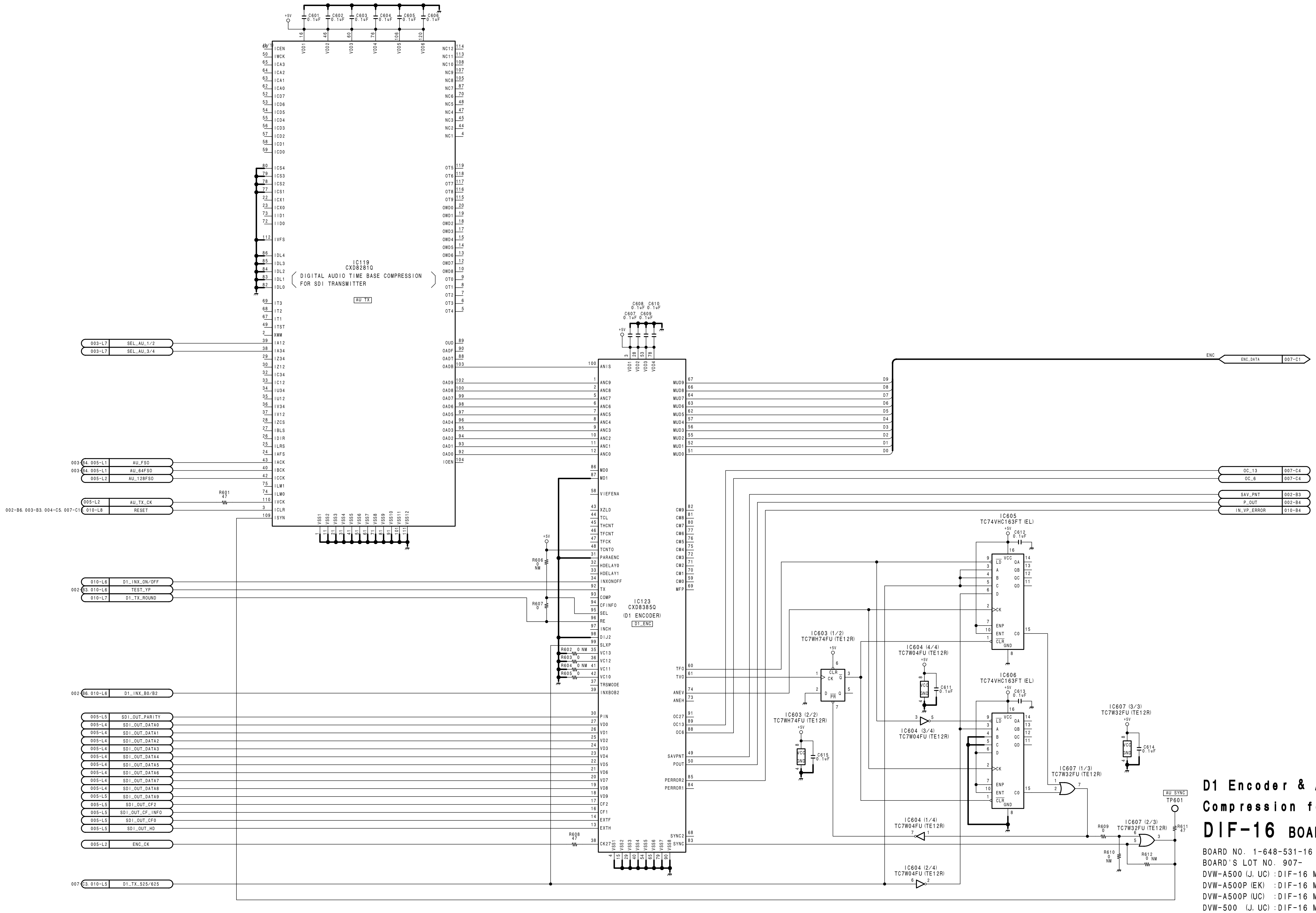

D1 Encoder & Audio Timebase Compression for SDI Transmitter

DIF-16 BOARD (6/10)

BOARD NO. 1-648-531-16
BOARD'S LOT NO. 907-
DVW-A500 (J, UC) :DIF-16 MCB
DVW-A500P (EK) :DIF-16 MCB
DVW-A500P (UC) :DIF-16 MCB
DVW-500 (J, UC) :DIF-16 MCB
DVW-500P (EK) :DIF-16 MCB
DVW-500P (UC) :DIF-16 MCB

DVW-A500_DIF-16_006_6

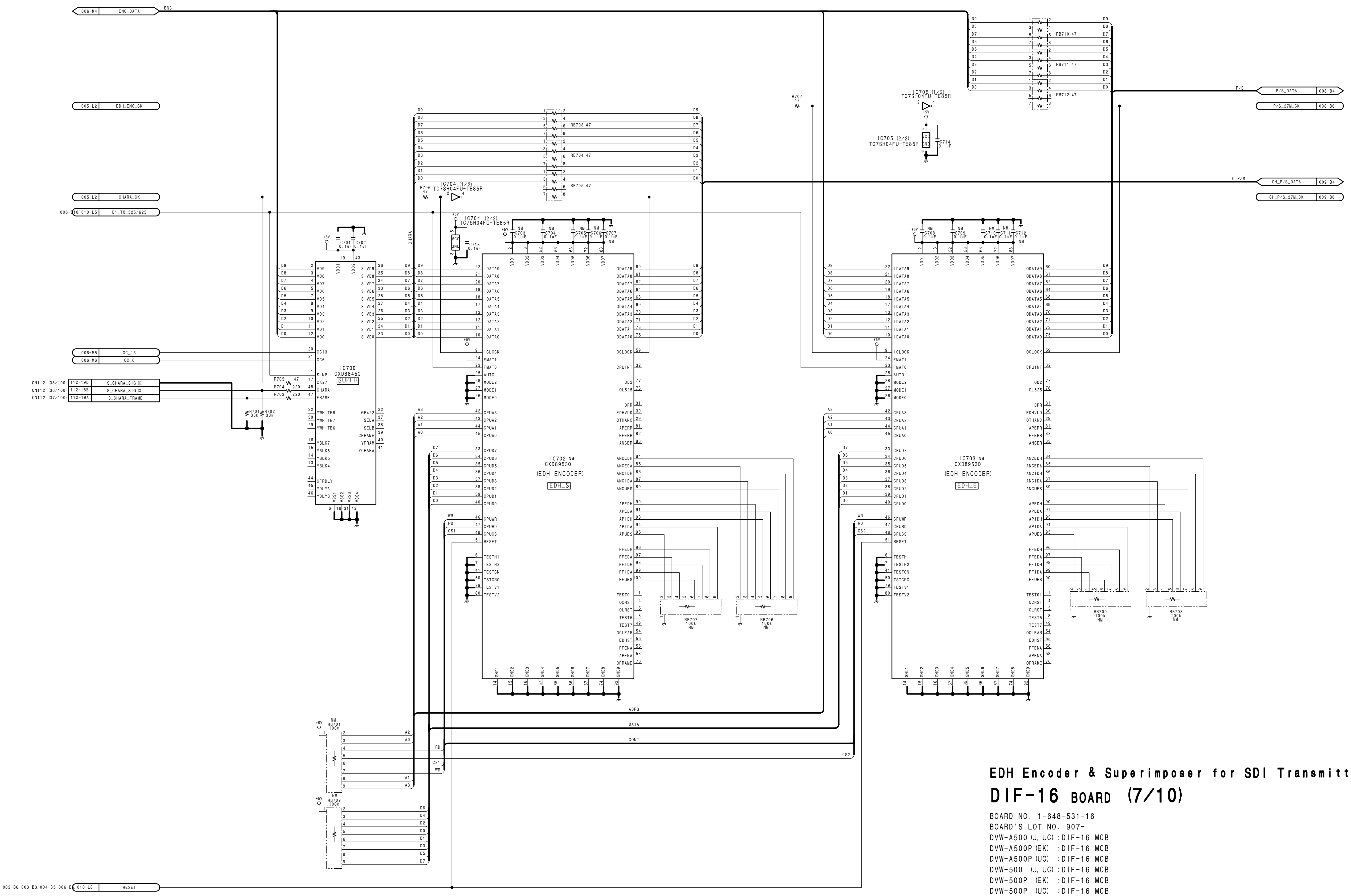

EDH Encoder & Superimposer for SDI Transmitter

DIF-16 BOARD (7/10)

BOARD NO. 1-648-531-16
BOARD'S LOT NO. 907-
DVW-A500 (J, UC) : DIF-16 MCB
DVW-A500P (EK) : DIF-16 MCB
DVW-A500P (UC) : DIF-16 MCB
DVW-500 (J, UC) : DIF-16 MCB
DVW-500P (EK) : DIF-16 MCB
DVW-500P (UC) : DIF-16 MCB

DVW-A500_DIF-16_006_7

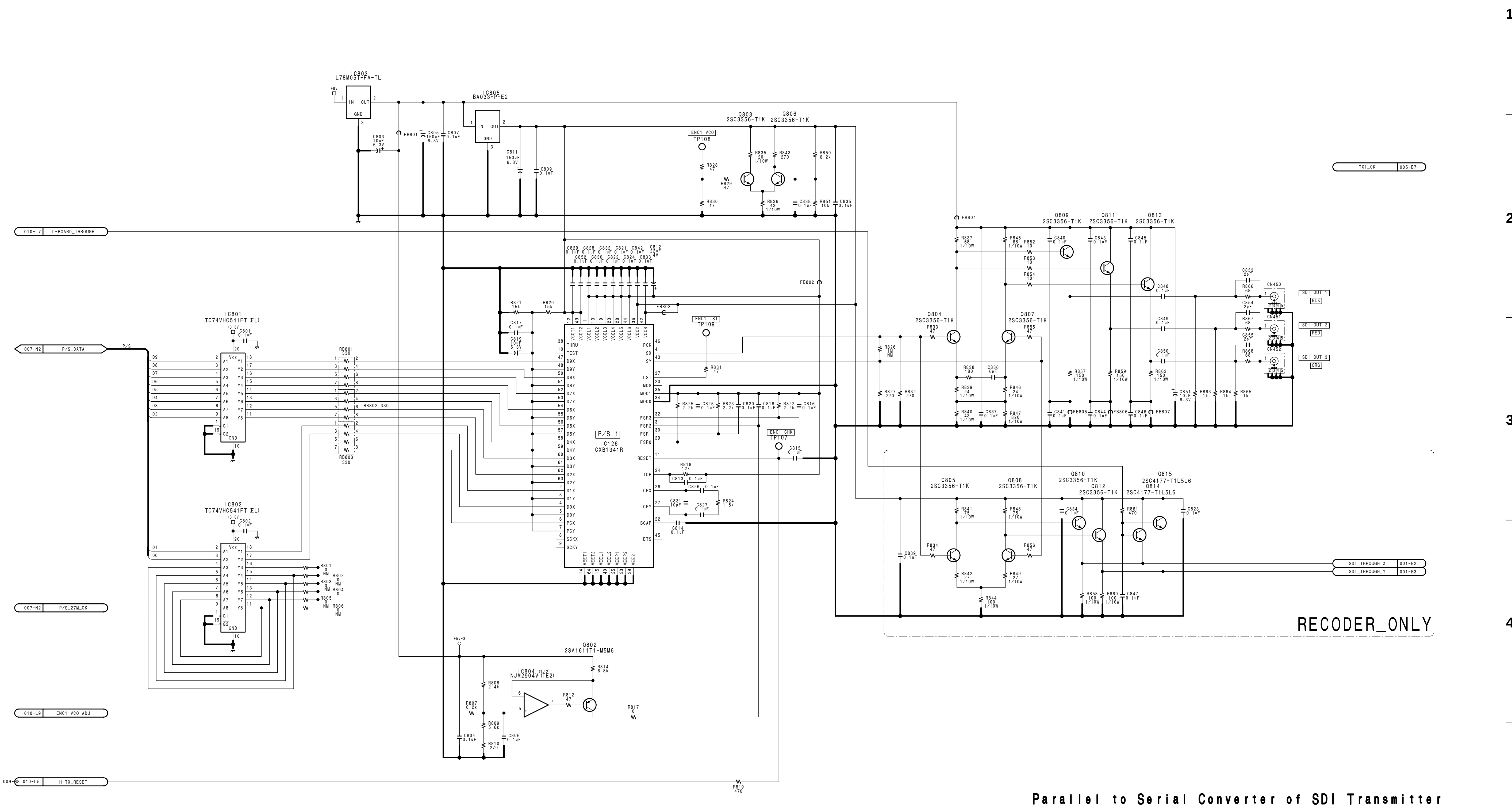

Parallel to Serial Converter of SDI Transmitter

DIF-16 BOARD (8/10)

BOARD NO. 1-648-531-16
BOARD'S LOT NO. 907-
DVW-A500 (J, UC) :DIF-16 MCB
DVW-A500P (EK) :DIF-16 MCB
DVW-A500P (UC) :DIF-16 MCB
DVW-500 (J, UC) :DIF-16 MCB
DVW-500P (EK) :DIF-16 MCB
DVW-500P (UC) :DIF-16 MCB

DVW-A500_DIF-16_006_8

DIF-16 (9/10)

1
2
3
4
5

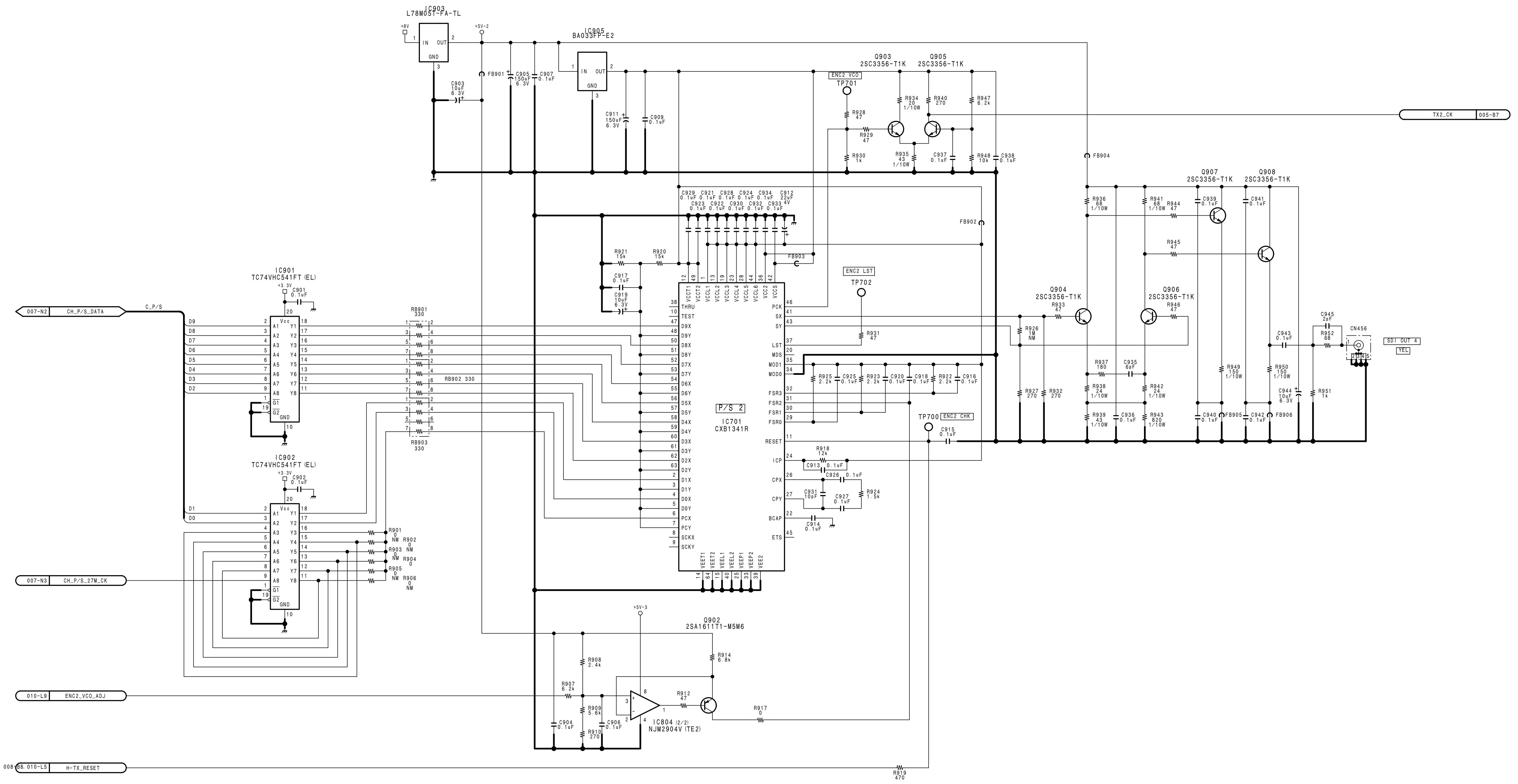

Parallel to Serial Converter with Superimpose of SDI Transmitter

DIF-16 BOARD (9/10)

BOARD NO. 1-648-531-16
BOARD'S LOT NO. 907-
DVW-A500 (J, UC) : DIF-16 MCB
DVW-A500P (EK) : DIF-16 MCB
DVW-A500P (UC) : DIF-16 MCB
DVW-500 (J, UC) : DIF-16 MCB
DVW-500P (EK) : DIF-16 MCB
DVW-500P (UC) : DIF-16 MCB
DVW-A500_DIF-16_006_9

1-48 (c)

A B C D E F G H

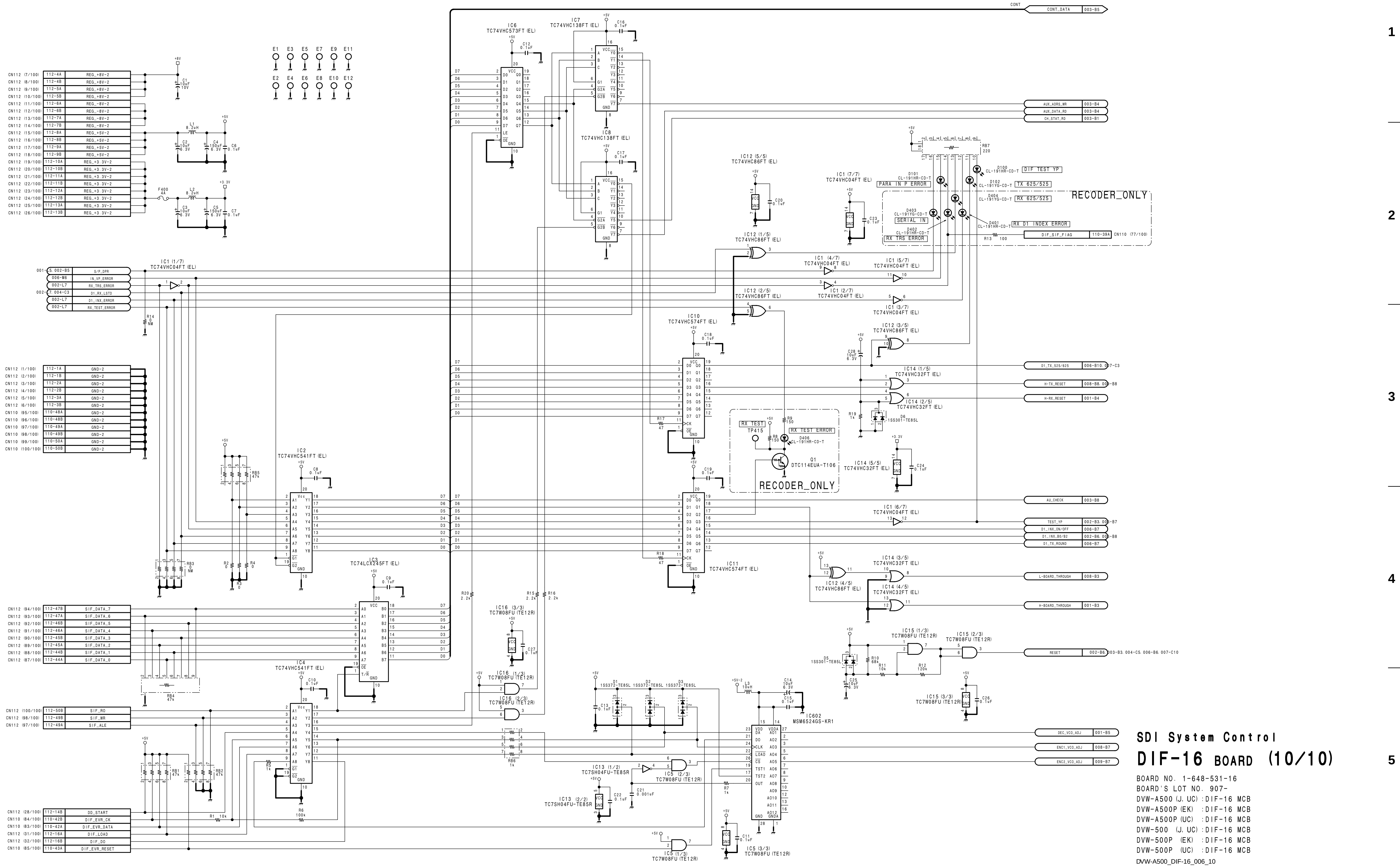

SDI System Control

DIF-16 BOARD (10/10)

BOARD NO. 1-648-531-16
BOARD'S LOT NO. 907-
DVW-A500 (J, UC) : DIF-16 MCB
DVW-A500P (EK) : DIF-16 MCB
DVW-A500P (UC) : DIF-16 MCB
DVW-500 (J, UC) : DIF-16 MCB
DVW-500P (EK) : DIF-16 MCB
DVW-500P (UC) : DIF-16 MCB

DVW-A500_DIF-16_006_10

DIF-16 (1/5)

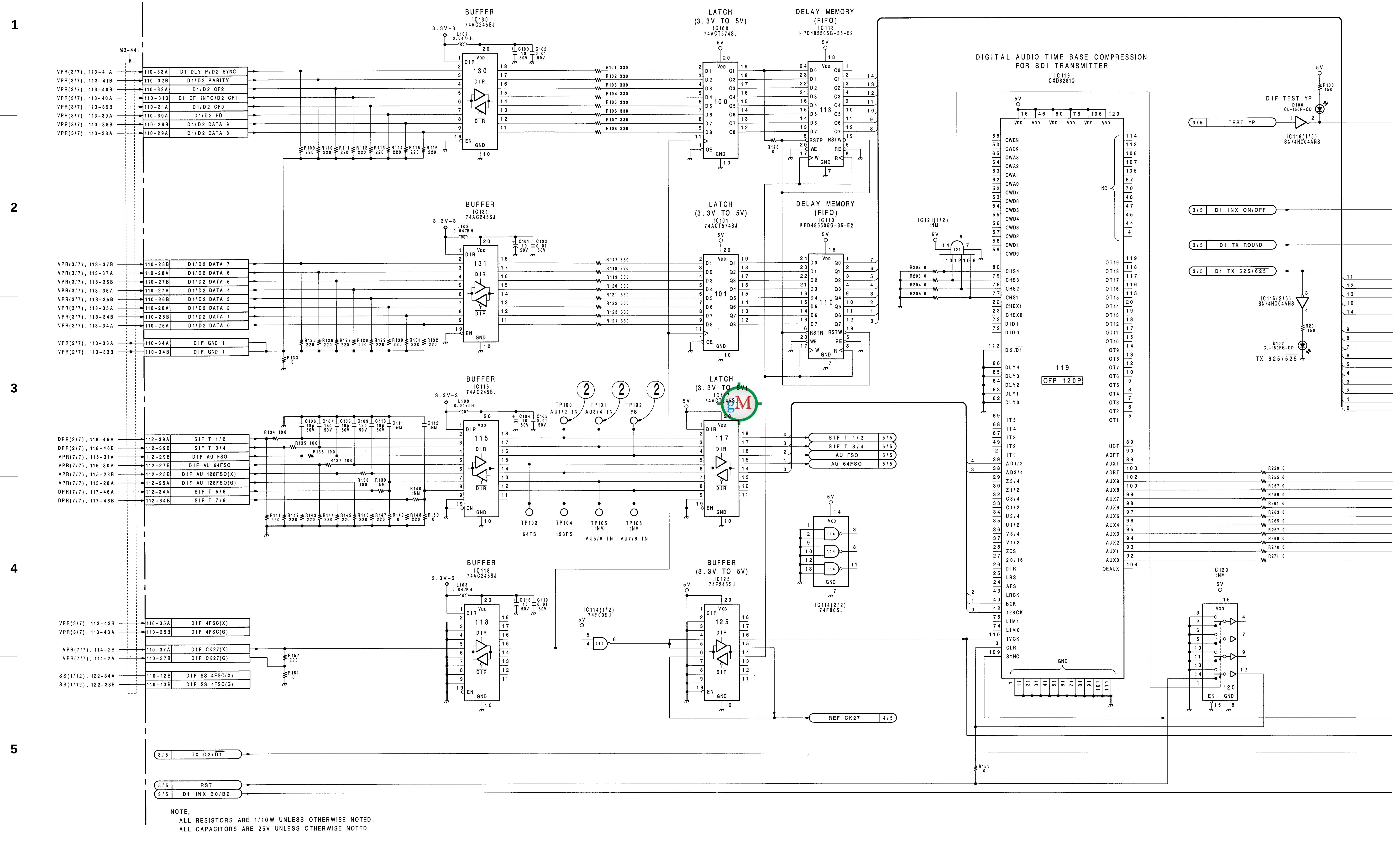
BUFFER
LATCH (3.3V TO 5V)
DELAY MEMORY (FIFO)
DIGITAL AUDIO TIME BASE COMPRESSION FOR SDI TRANSMITTER
IC119 CXD8281Q
DIF TEST YP
NOTE;
ALL RESISTORS ARE 1/10W UNLESS OTHERWISE NOTED.
ALL CAPACITORS ARE 25V UNLESS OTHERWISE NOTED.

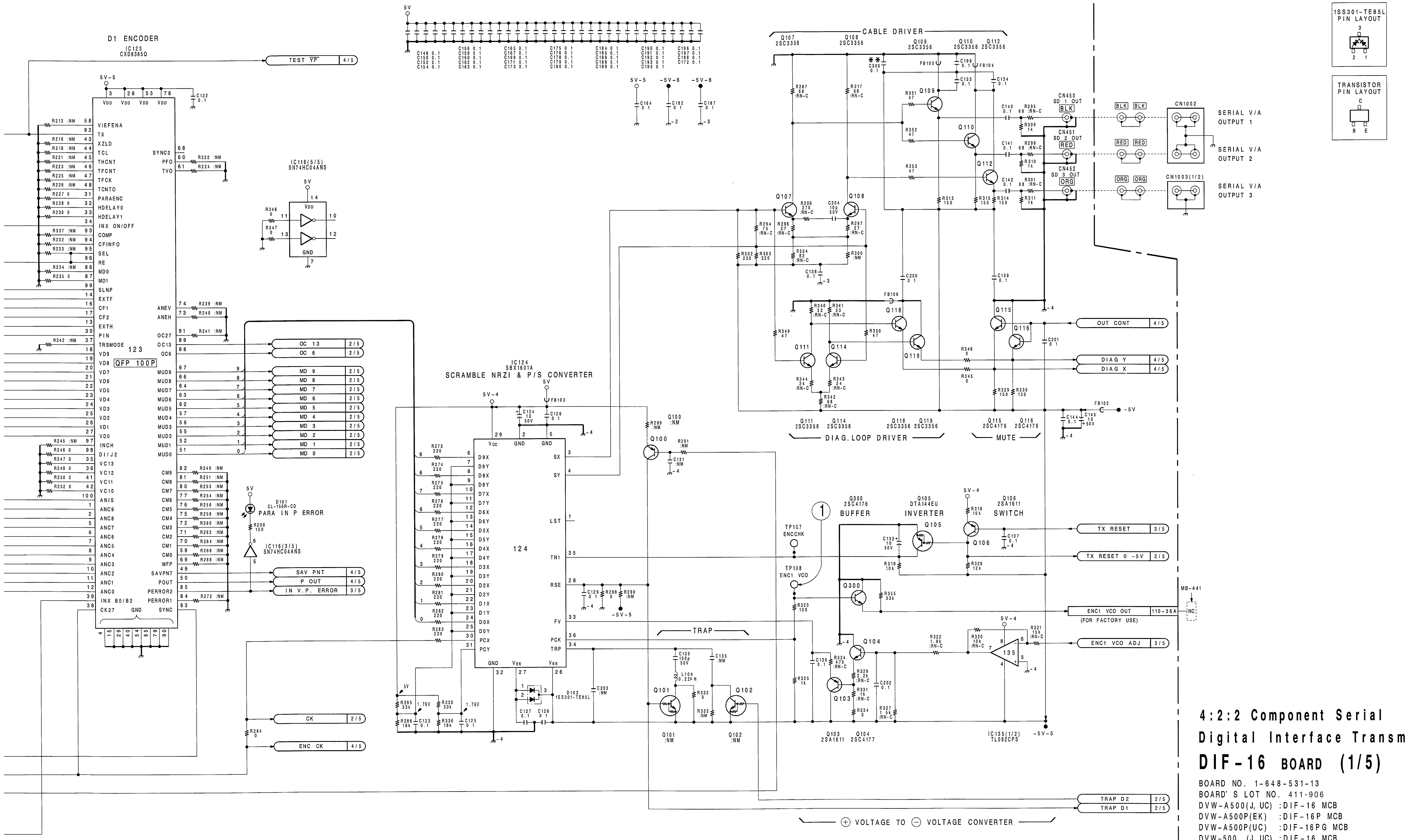

4:2:2 Component Serial Digital Interface Transmitter

DIF-16 BOARD (1/5)

BOARD NO. 1-648-531-13
BOARD' S LOT NO. 411-906
DVW-A500(J, UC) :DIF-16 MCB
DVW-A500P(EK) :DIF-16P MCB
DVW-A500P(UC) :DIF-16PG MCB
DVW-500 (J, UC) :DIF-16 MCB
DVW-500P (EK) :DIF-16P MCB
DVW-500P (UC) :DIF-16PG MCB

DVW-DIF16-ALL-REC-S/M-04-B

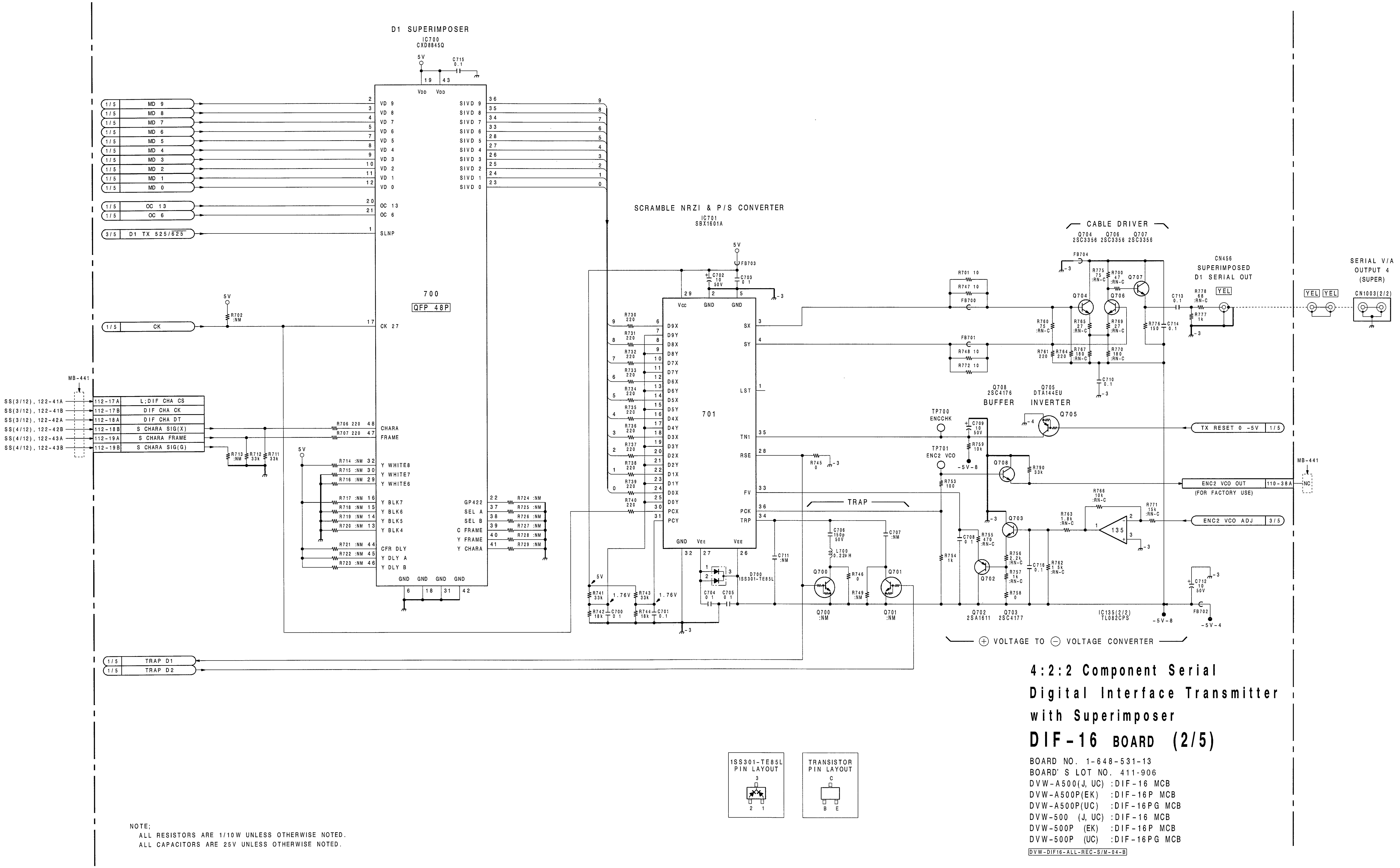

4:2:2 Component Serial Digital Interface Transmitter with Superimposer

DIF-16 BOARD (2/5)

BOARD NO. 1-648-531-13
BOARD' S LOT NO. 411-906
DVW-A500(J, UC) :DIF-16 MCB
DVW-A500P(EK) :DIF-16P MCB
DVW-A500P(UC) :DIF-16PG MCB
DVW-500 (J, UC) :DIF-16 MCB
DVW-500P (EK) :DIF-16P MCB
DVW-500P (UC) :DIF-16PG MCB
DVW-DIF16-ALL-REC-S/M-04-B

NOTE;
ALL RESISTORS ARE 1/10W UNLESS OTHERWISE NOTED.
ALL CAPACITORS ARE 25V UNLESS OTHERWISE NOTED.

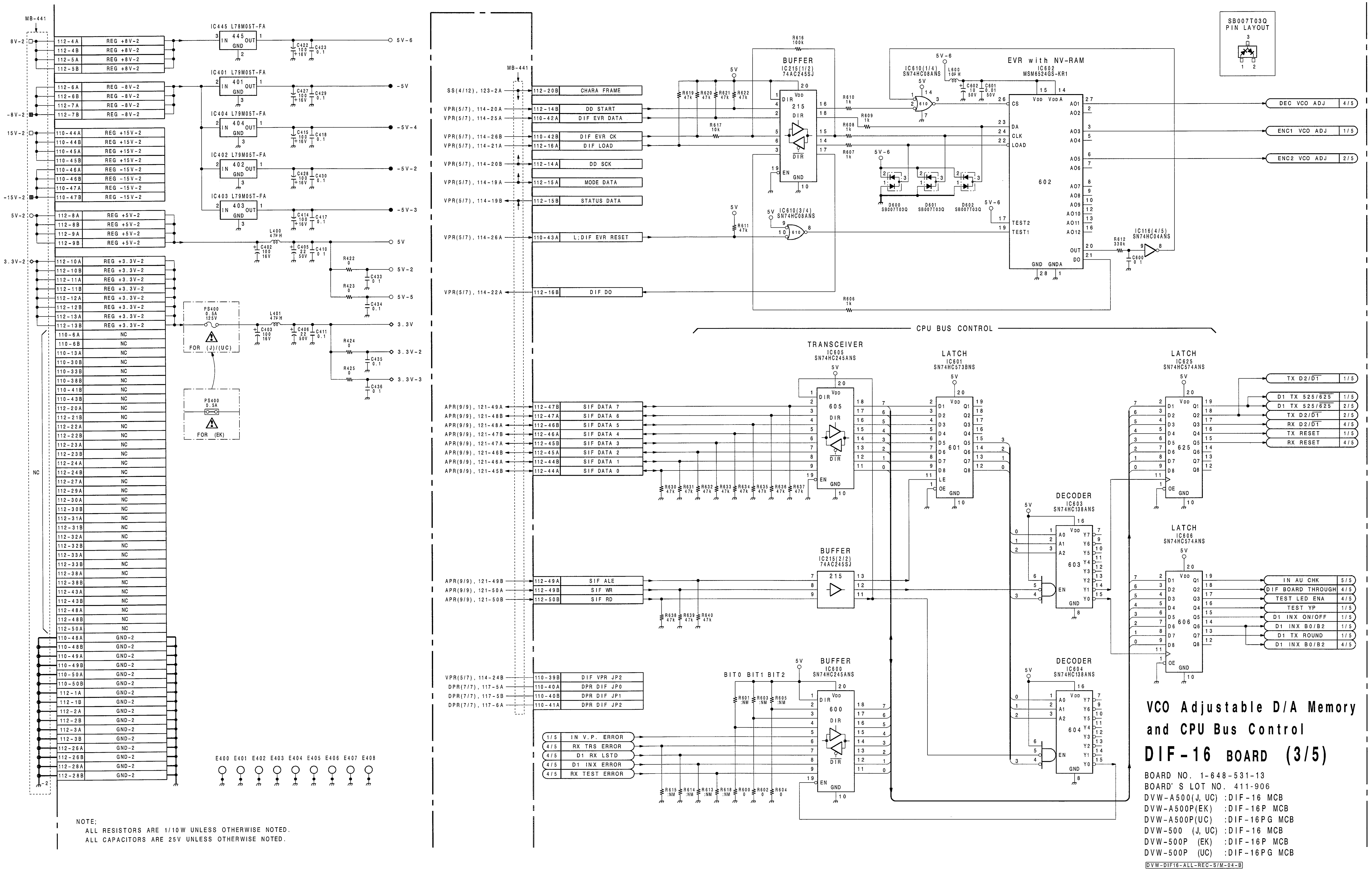

VCO Adjustable D/A Memory and CPU Bus Control

DIF-16 BOARD (3/5)

BOARD NO. 1-648-531-13
BOARD'S LOT NO. 411-906
DVW-A500(J, UC) :DIF-16 MCB
DVW-A500P(EK) :DIF-16P MCB
DVW-A500P(UC) :DIF-16PG MCB
DVW-500 (J, UC) :DIF-16 MCB
DVW-500P (EK) :DIF-16P MCB
DVW-500P (UC) :DIF-16PG MCB

DVW-DIF16-ALL-REC-S/M-04-B

NOTE;
ALL RESISTORS ARE 1/10W UNLESS OTHERWISE NOTED.
ALL CAPACITORS ARE 25V UNLESS OTHERWISE NOTED.

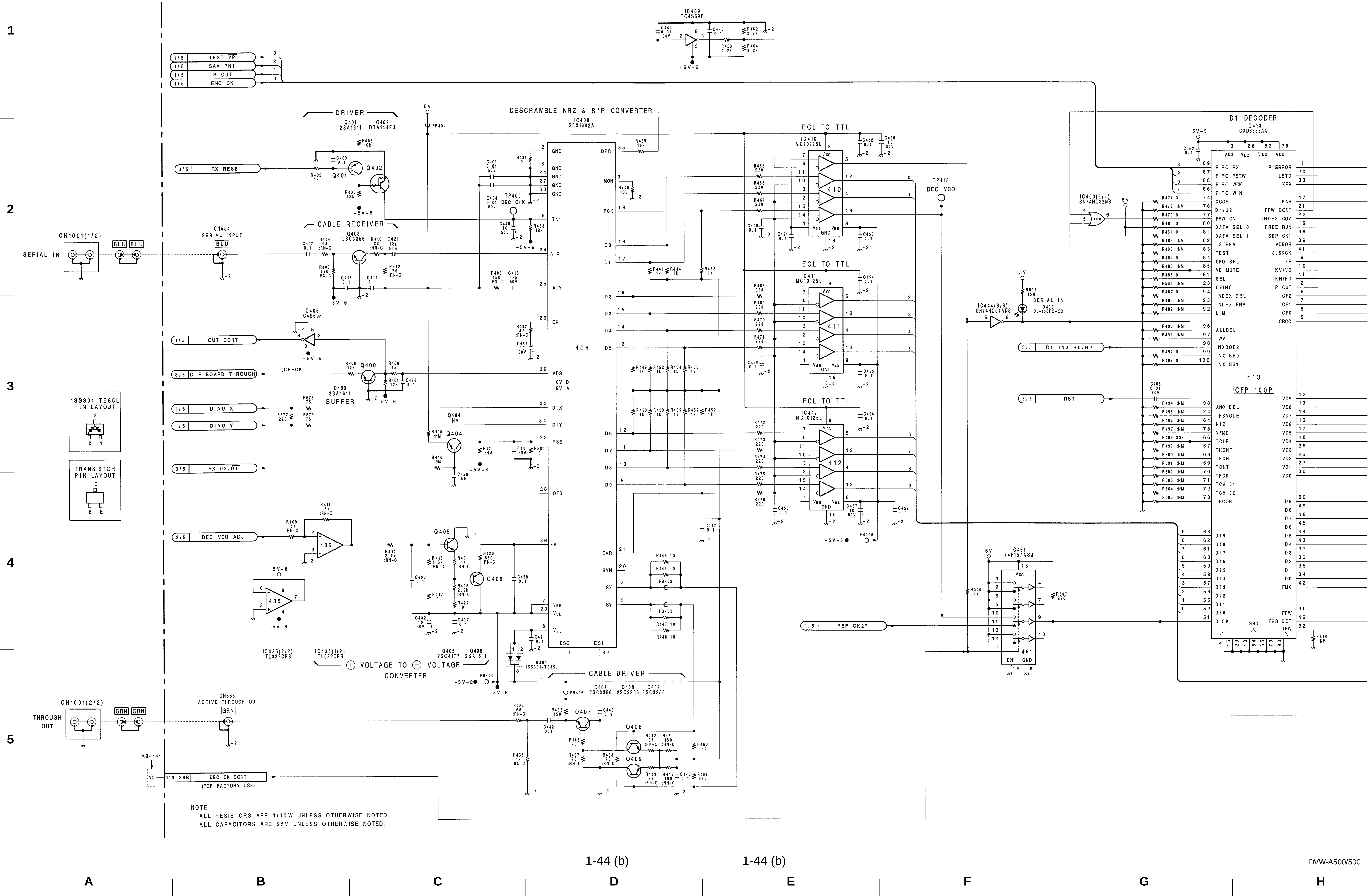
1
2
3
4
5
SERIAL IN
CN1001(1/2)
CN554
SERIAL INPUT
DRIVER
Q401
2SA1611
Q402
DTA144EU
RX RESET
CABLE RECEIVER
Q403
2SC3356
DESCRAMBLE NRZ & S/P CONVERTER
IC408
SBX1602A
IC409
TC4S69F
ECL TO TTL
IC410
MC10125L
IC411
MC10125L
IC412
MC10125L
TP418
DEC VCO
D1 DECODER
IC413
CXD8386AQ
413
QFP 100P
TEST YP
SAV PNT
P OUT
ENC CK
IC406
TC4S69F
OUT CONT
DIF BOARD THROUGH
L;CHECK
Q400
2SA1611
BUFFER
DIAG X
DIAG Y
RX D2/D1
1SS301-TE85L
PIN LAYOUT
TRANSISTOR
PIN LAYOUT
DEC VCO ADJ
IC435(2/2)
TL082CPS
IC435(1/2)
TL082CPS
Q405
2SC4177
Q406
2SA1611
+ VOLTAGE TO − VOLTAGE
CONVERTER
D400
1SS301-TE85L
CABLE DRIVER
Q407
2SC3356
Q408
2SC3356
Q409
2SC3356
THROUGH OUT
CN1001(2/2)
CN555
ACTIVE THROUGH OUT
MB-441
DEC CK CONT
(FOR FACTORY USE)
IC400(2/4)
SN74HC32NS
IC444(3/6)
SN74HC04ANS
D403
CL-150PG-CD
SERIAL IN
D1 INX B0/B2
RST
IC461
74F157ASJ
REF CK27
NOTE;
ALL RESISTORS ARE 1/10W UNLESS OTHERWISE NOTED.
ALL CAPACITORS ARE 25V UNLESS OTHERWISE NOTED.
A
B
C
D
E
F
G
H

http://getMANUAL.com

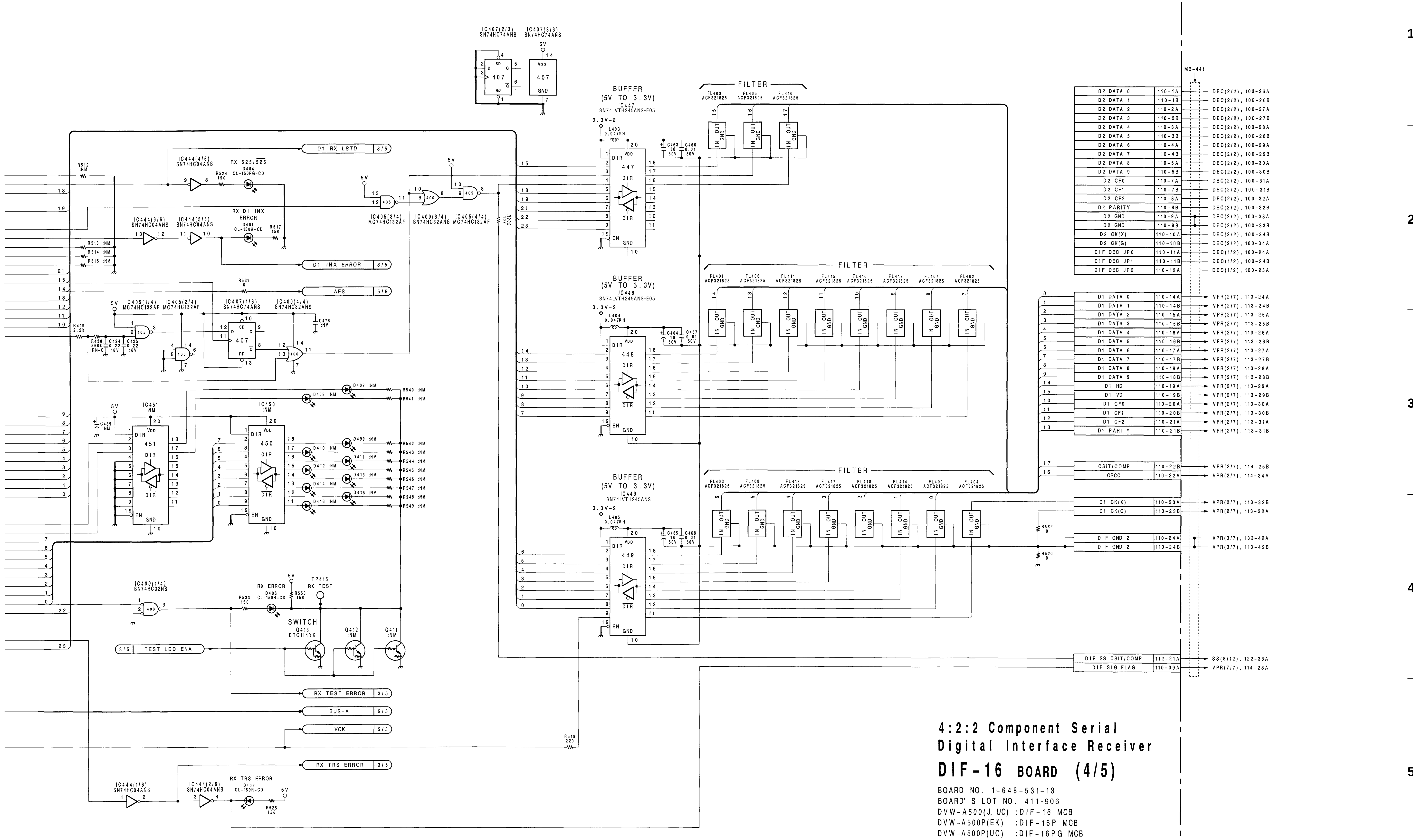

4:2:2 Component Serial
Digital Interface Receiver

DIF-16 BOARD (4/5)

BOARD NO. 1-648-531-13
BOARD' S LOT NO. 411-906
DVW-A500(J, UC) :DIF-16 MCB
DVW-A500P(EK) :DIF-16P MCB
DVW-A500P(UC) :DIF-16PG MCB
DVW-500 (J, UC) :DIF-16 MCB
DVW-500P (EK) :DIF-16P MCB
DVW-500P (UC) :DIF-16PG MCB

DVW-DIF16-ALL-REC-S/M-04-B

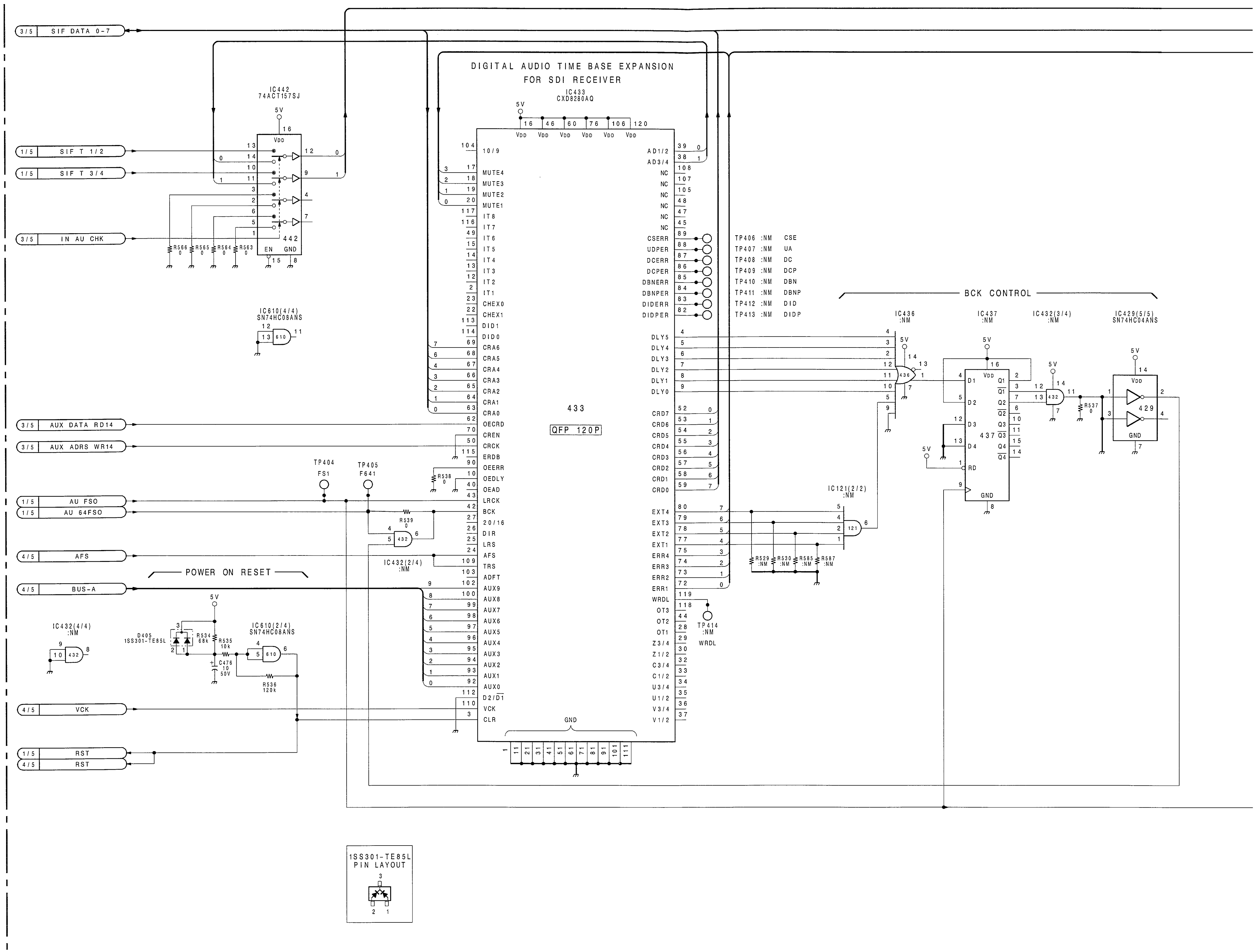

NOTE;
ALL RESISTORS ARE 1/10W UNLESS OTHERWISE NOTED.
ALL CAPACITORS ARE 25V UNLESS OTHERWISE NOTED.

1
2
3
4
5

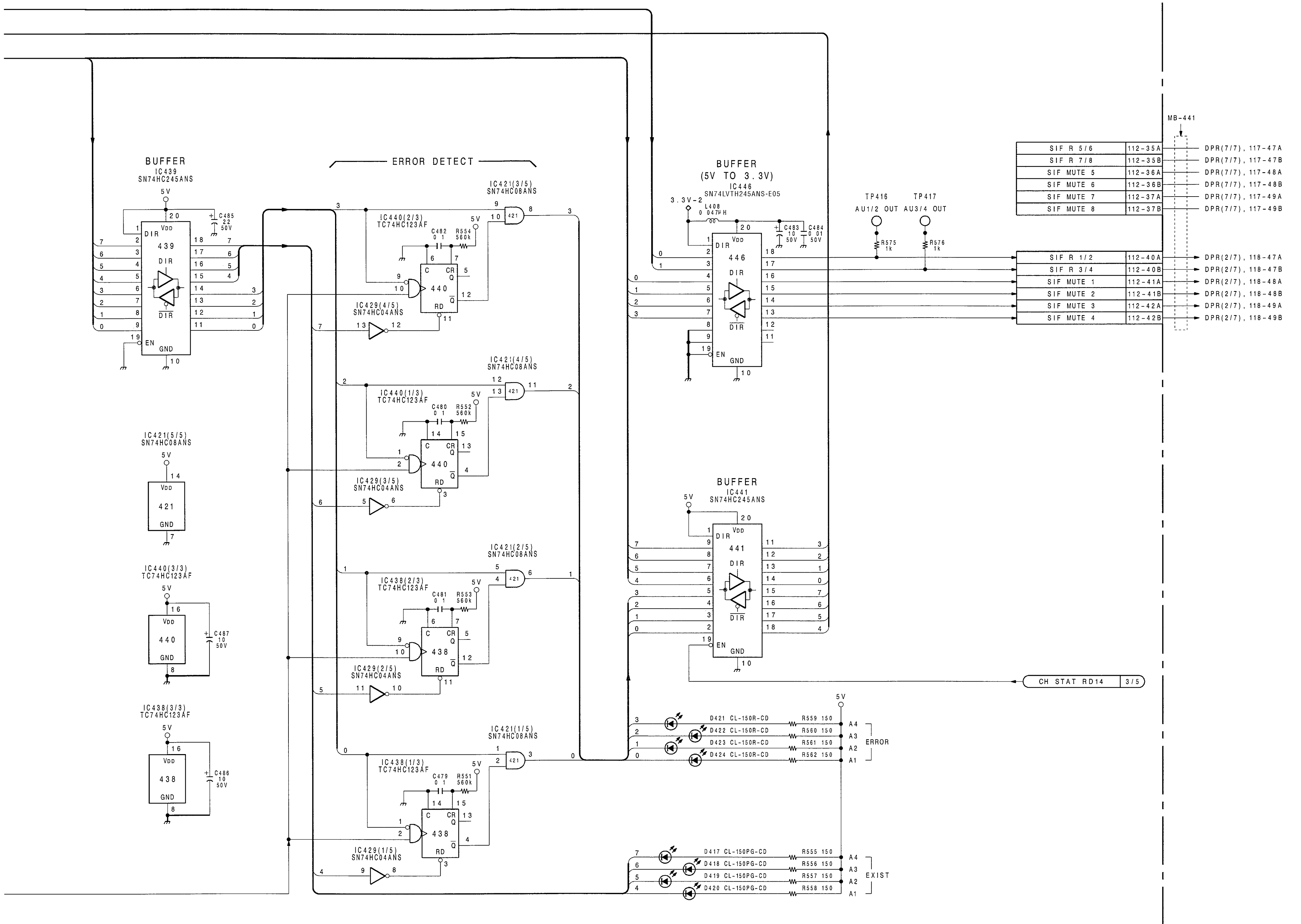

Digital Audio Timebase Expansion for 4:2:2 Component Serial Digital Interface Receiver

DIF-16 BOARD (5/5)

BOARD NO. 1-648-531-13
BOARD' S LOT NO. 411-906
DVW-A500(J, UC) :DIF-16 MCB
DVW-A500P(EK) :DIF-16P MCB
DVW-A500P(UC) :DIF-16PG MCB
DVW-500 (J, UC) :DIF-16 MCB
DVW-500P (EK) :DIF-16P MCB
DVW-500P (UC) :DIF-16PG MCB
DVW-DIF16-ALL-REC-S/M-04-B

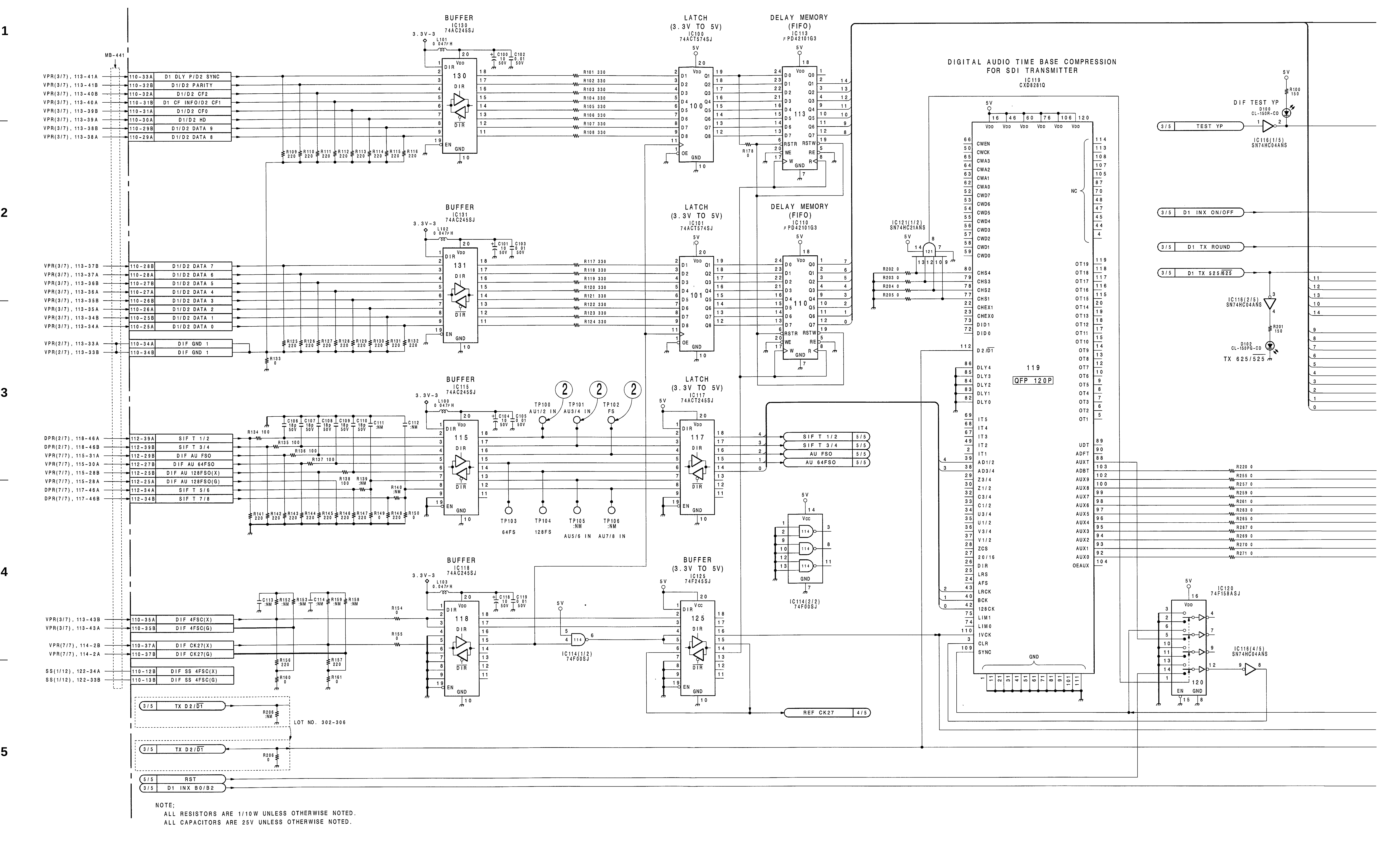
BUFFER
IC130
74AC245SJ
LATCH
(3.3V TO 5V)
IC100
74ACT574SJ
DELAY MEMORY
(FIFO)
IC113
μPD42101G3
DIGITAL AUDIO TIME BASE COMPRESSION
FOR SDI TRANSMITTER
IC119
CXD8281Q
DIF TEST YP
BUFFER
IC131
74AC245SJ
LATCH
(3.3V TO 5V)
IC101
74ACT574SJ
DELAY MEMORY
(FIFO)
IC110
μPD42101G3
BUFFER
IC115
74AC245SJ
LATCH
(3.3V TO 5V)
IC117
74ACT245SJ
BUFFER
IC118
74AC245SJ
BUFFER
(3.3V TO 5V)
IC125
74F245SJ
IC120
74F158ASJ
LOT NO. 302-306
NOTE;
ALL RESISTORS ARE 1/10W UNLESS OTHERWISE NOTED.
ALL CAPACITORS ARE 25V UNLESS OTHERWISE NOTED.

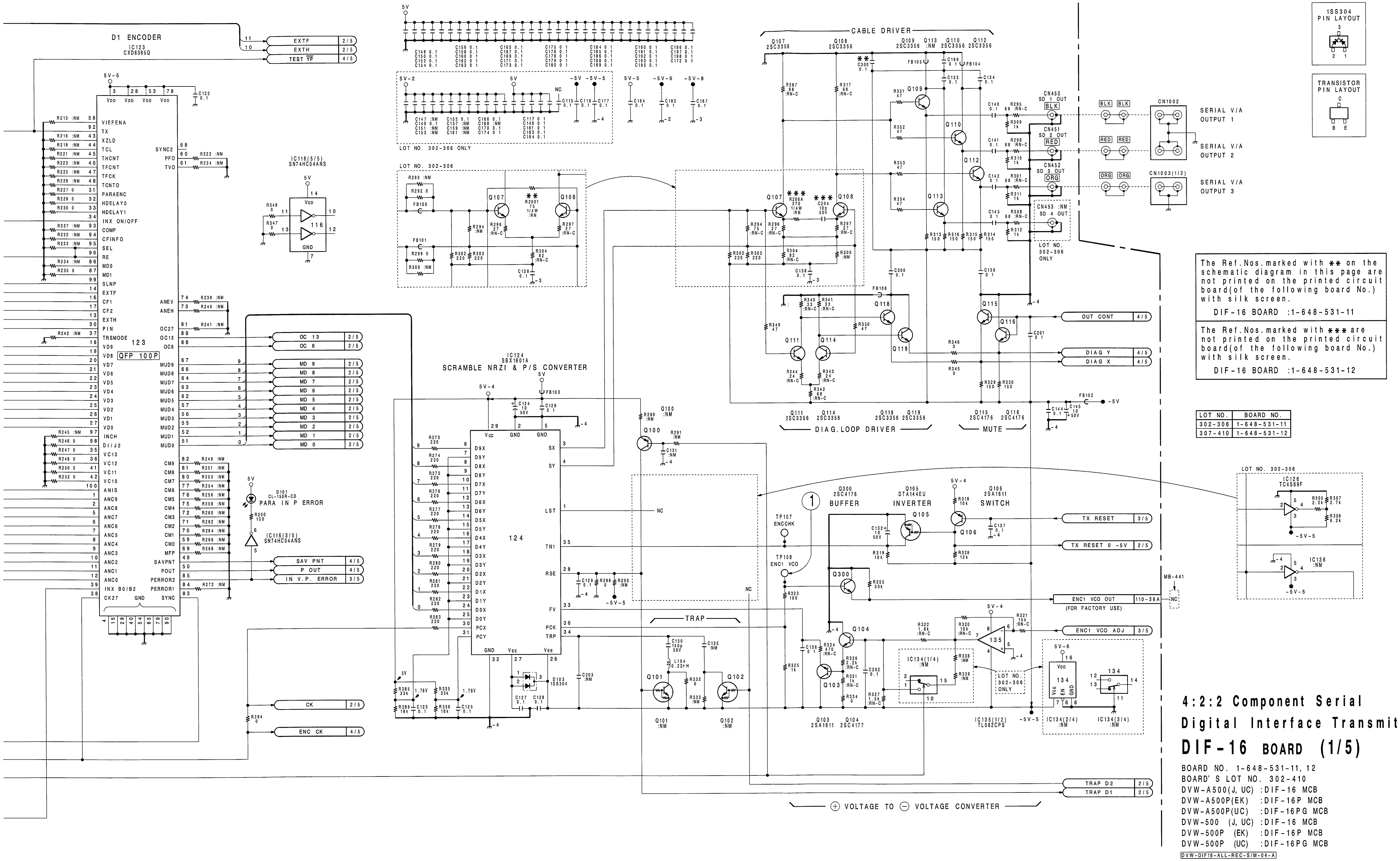

The Ref.Nos.marked with ** on the schematic diagram in this page are not printed on the printed circuit board(of the following board No.) with silk screen.

DIF-16 BOARD :1-648-531-11

The Ref.Nos.marked with *** are not printed on the printed circuit board(of the following board No.) with silk screen.

DIF-16 BOARD :1-648-531-12

LOT NO.	BOARD NO.
302-306	1-648-531-11
307-410	1-648-531-12

4:2:2 Component Serial Digital Interface Transmitter

DIF-16 BOARD (1/5)

BOARD NO. 1-648-531-11, 12
BOARD' S LOT NO. 302-410
DVW-A500(J, UC) :DIF-16 MCB
DVW-A500P(EK) :DIF-16P MCB
DVW-A500P(UC) :DIF-16PG MCB
DVW-500 (J, UC) :DIF-16 MCB
DVW-500P (EK) :DIF-16P MCB
DVW-500P (UC) :DIF-16PG MCB

DVW-DIF16-ALL-REC-S/M-04-A

 DIF-16 (2/5)

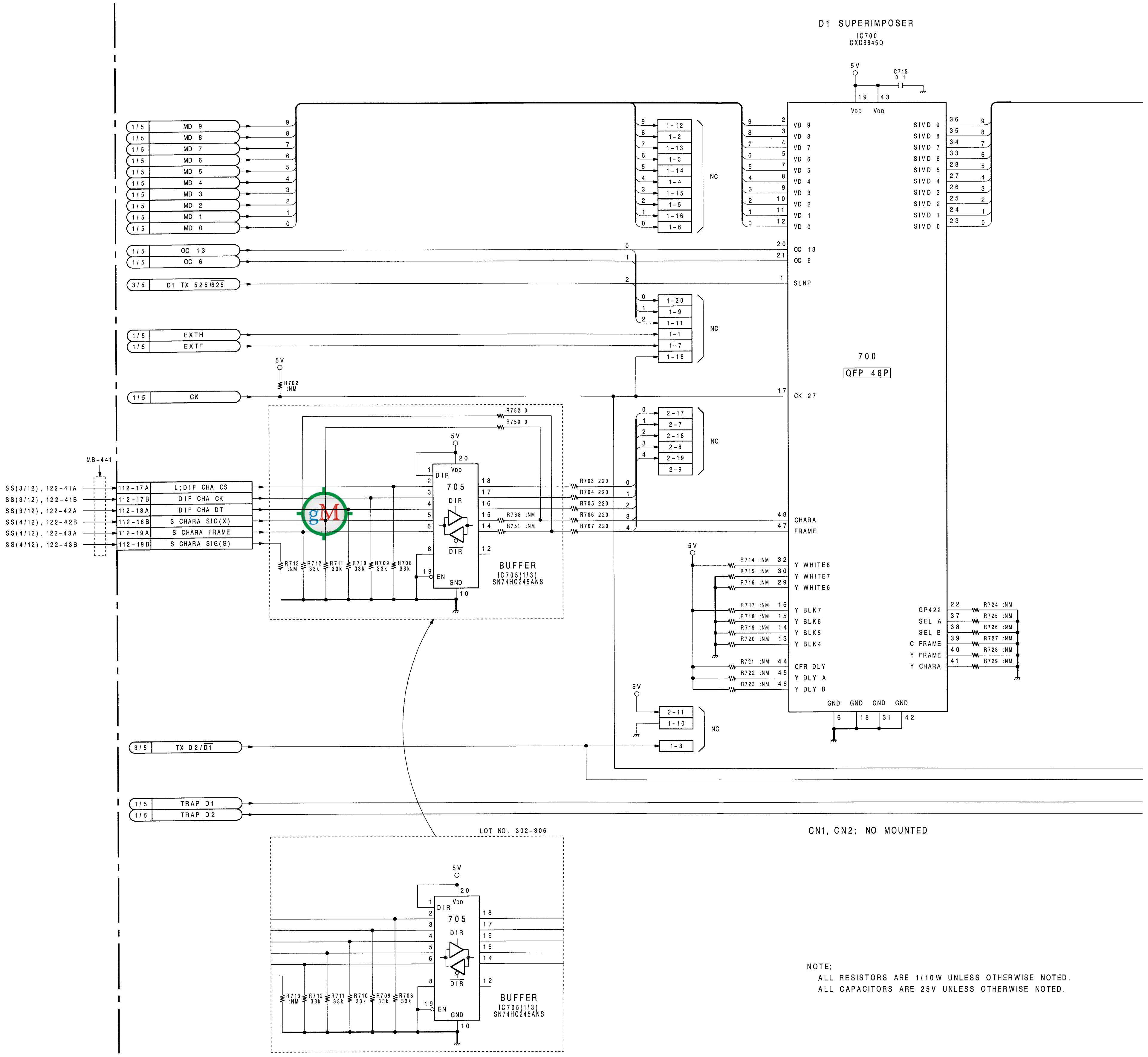
D1 SUPERIMPOSER
IC700
CXD8845Q
700
QFP 48P
BUFFER
IC705(1/3)
SN74HC245ANS
MB-441
LOT NO. 302-306
CN1, CN2; NO MOUNTED
NOTE;
ALL RESISTORS ARE 1/10W UNLESS OTHERWISE NOTED.
ALL CAPACITORS ARE 25V UNLESS OTHERWISE NOTED.

1
2
3
4
5

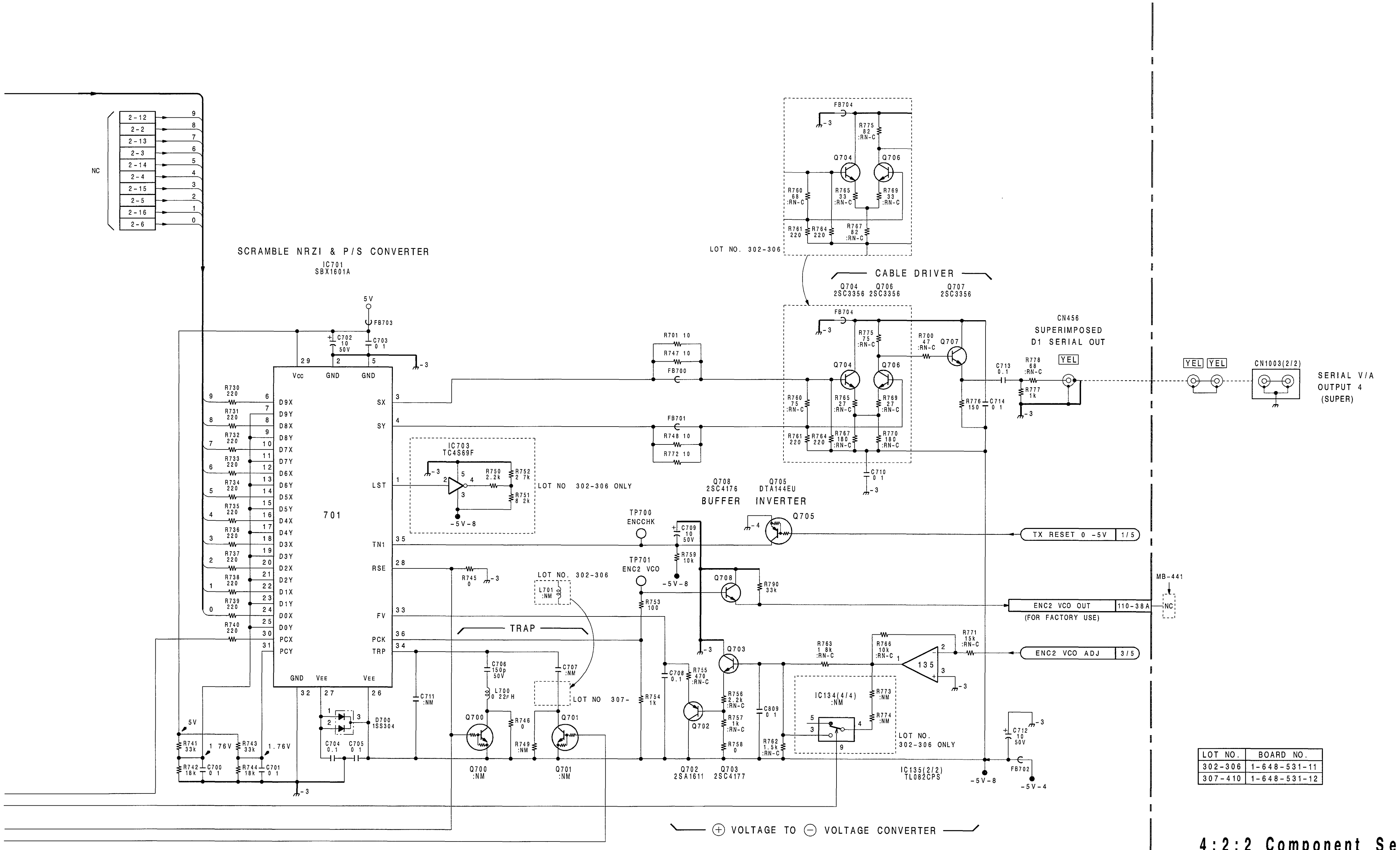

LOT NO.	BOARD NO.
302-306	1-648-531-11
307-410	1-648-531-12

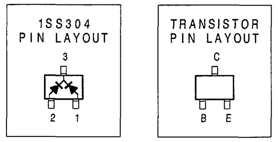

4:2:2 Component Serial Digital Interface Transmitter with Superimposer

DIF-16 BOARD (2/5)

BOARD NO. 1-648-531-11, 12
BOARD' S LOT NO. 302-410
DVW-A500(J, UC) :DIF-16 MCB
DVW-A500P(EK) :DIF-16P MCB
DVW-A500P(UC) :DIF-16PG MCB
DVW-500 (J, UC) :DIF-16 MCB
DVW-500P (EK) :DIF-16P MCB
DVW-500P (UC) :DIF-16PG MCB

DVW-DIF16-ALL-REC-S/M-04-A

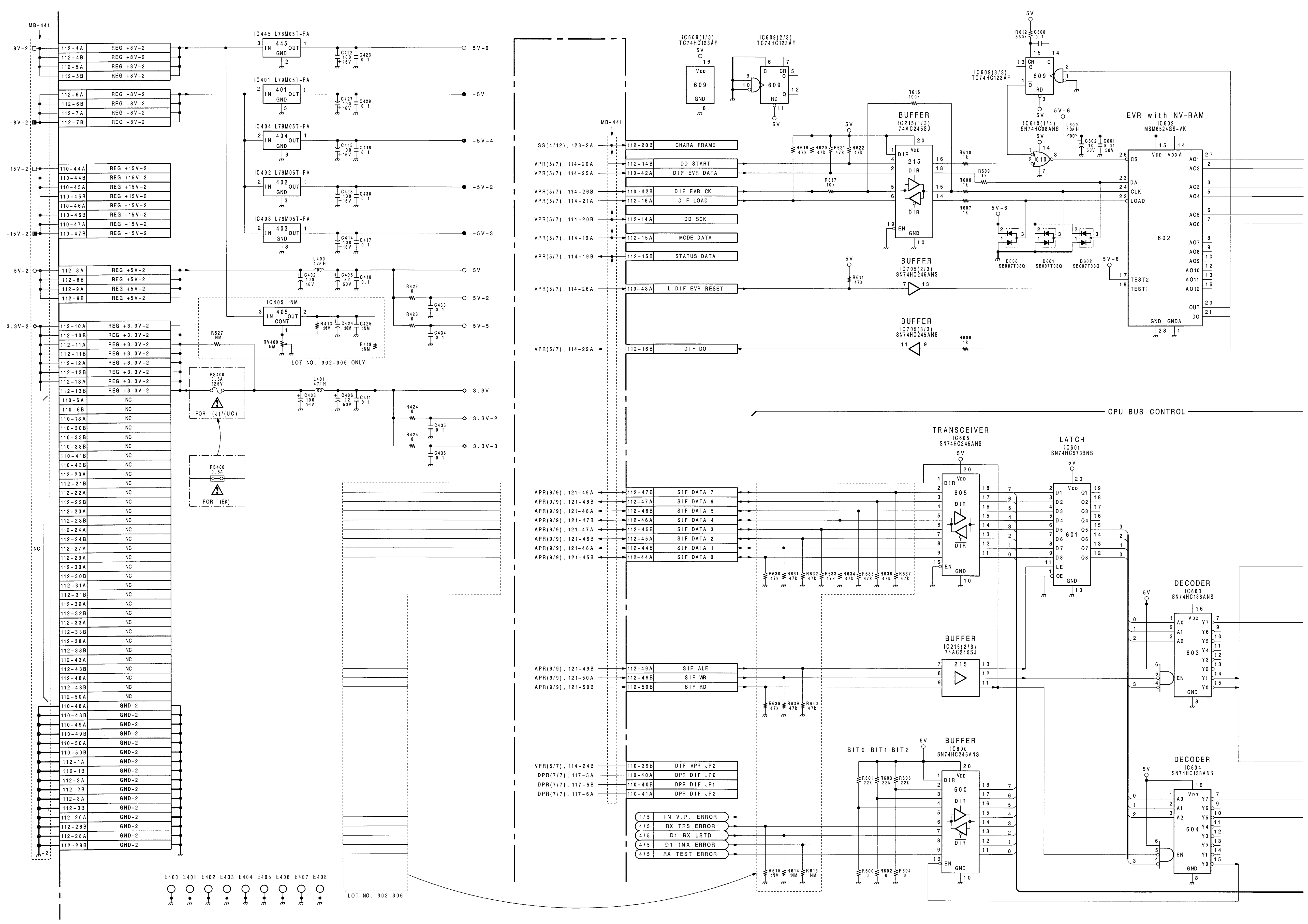

MB-441
IC445 L78M05T-FA
IC401 L79M05T-FA
IC404 L79M05T-FA
IC402 L79M05T-FA
IC403 L79M05T-FA
IC405 :NM
LOT NO. 302-306 ONLY
PS400 0.5A 125V
FOR (J)/(UC)
PS400 0.5A
FOR (EK)
LOT NO. 302-306
E400 E401 E402 E403 E404 E405 E406 E407 E408
IC609(1/3) TC74HC123AF
IC609(2/3) TC74HC123AF
IC609(3/3) TC74HC123AF
BUFFER IC215(1/3) 74AC245SJ
IC610(1/4) SN74HC08ANS
EVR with NV-RAM IC602 MSM6524GS-VK
BUFFER IC705(2/3) SN74HC245ANS
BUFFER IC705(3/3) SN74HC245ANS
CHARA FRAME
DD START
DIF EVR DATA
DIF EVR CK
DIF LOAD
DD SCK
MODE DATA
STATUS DATA
L;DIF EVR RESET
DIF DO
CPU BUS CONTROL
TRANSCEIVER IC605 SN74HC245ANS
LATCH IC601 SN74HC573BNS
SIF DATA 7
SIF DATA 6
SIF DATA 5
SIF DATA 4
SIF DATA 3
SIF DATA 2
SIF DATA 1
SIF DATA 0
DECODER IC603 SN74HC138ANS
BUFFER IC215(2/3) 74AC245SJ
SIF ALE
SIF WR
SIF RD
DECODER IC604 SN74HC138ANS
BUFFER IC600 SN74HC245ANS
BIT0 BIT1 BIT2
DIF VPR JP2
DPR DIF JP0
DPR DIF JP1
DPR DIF JP2
IN V.P. ERROR
RX TRS ERROR
D1 RX LSTD
D1 INX ERROR
RX TEST ERROR

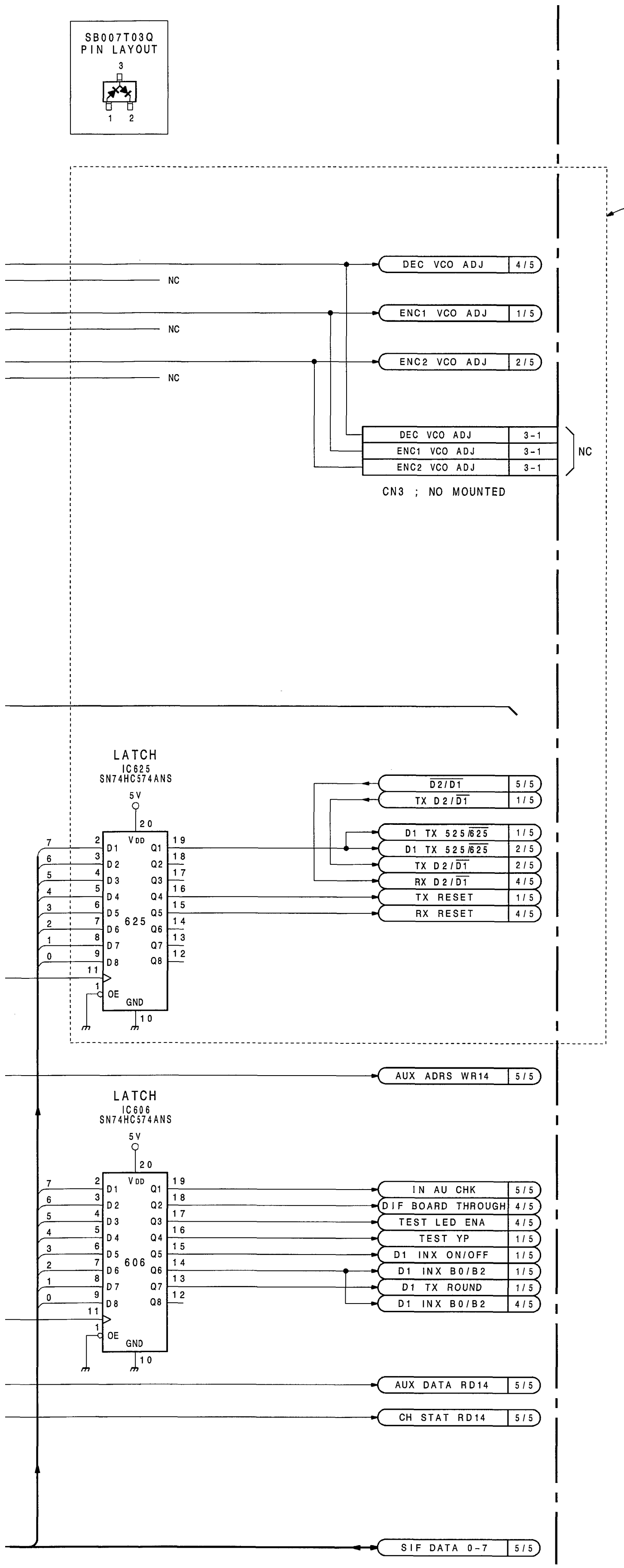

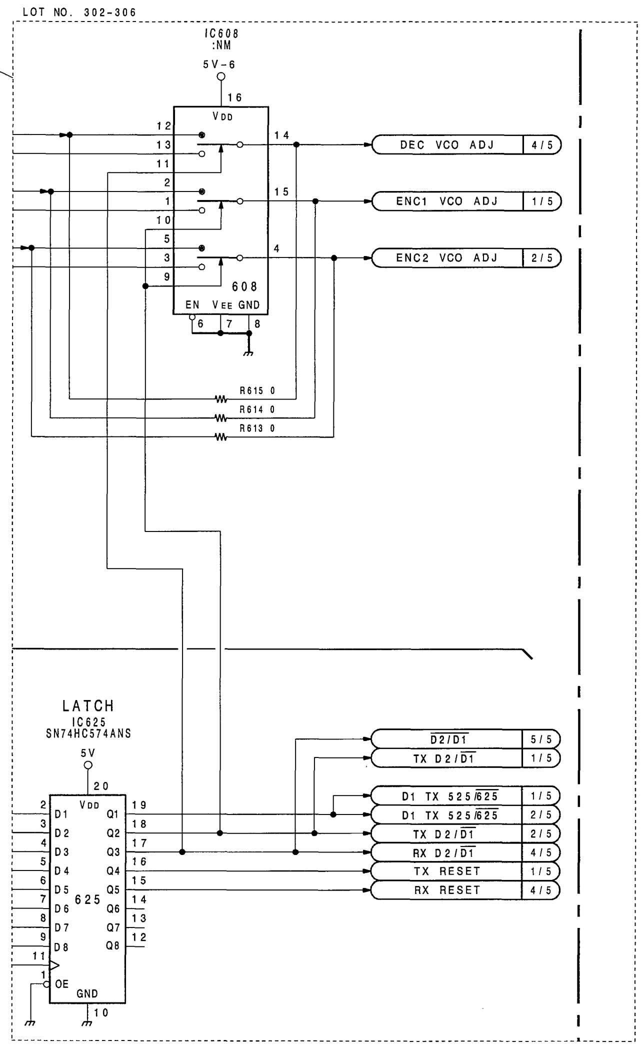

NOTE;
ALL RESISTORS ARE 1/10W UNLESS OTHERWISE NOTED.
ALL CAPACITORS ARE 25V UNLESS OTHERWISE NOTED.

LOT NO.	BOARD NO.
302-306	1-648-531-11
307-410	1-648-531-12

VCO Adjustable D/A Memory and CPU Bus Control

DIF-16 BOARD (3/5)

BOARD NO. 1-648-531-11, 12
BOARD'S LOT NO. 302-410
DVW-A500(J, UC) :DIF-16 MCB
DVW-A500P(EK) :DIF-16P MCB
DVW-A500P(UC) :DIF-16PG MCB
DVW-500 (J, UC) :DIF-16 MCB
DVW-500P (EK) :DIF-16P MCB
DVW-500P (UC) :DIF-16PG MCB

DVW-DIF16-ALL-REC-S/M-04-A

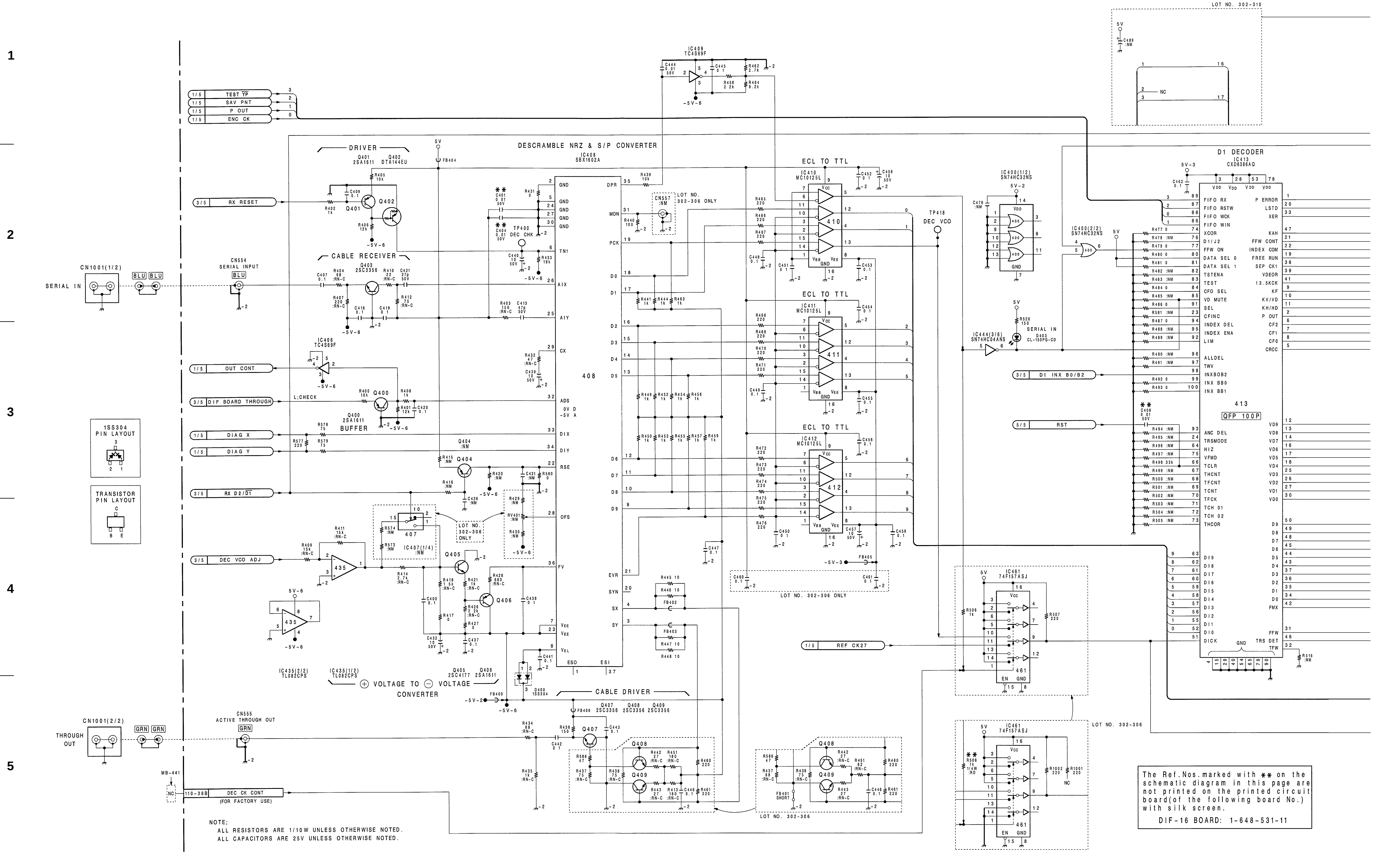
DESCRAMBLE NRZ & S/P CONVERTER
IC408 SBX1602A
DRIVER
CABLE RECEIVER
ECL TO TTL
IC410 MC10125L
IC411 MC10125L
IC412 MC10125L
D1 DECODER
IC413 CXD8386AQ
IC400(1/2) SN74HC32NS
IC400(2/2) SN74HC32NS
IC409 TC4S69F
IC406 TC4S69F
IC444(3/6) SN74HC04ANS
IC461 74F157ASJ
CN1001(1/2)
SERIAL IN
CN554 SERIAL INPUT
CN1001(2/2)
THROUGH OUT
CN555 ACTIVE THROUGH OUT
CABLE DRIVER
BUFFER
VOLTAGE TO VOLTAGE CONVERTER
TP418 DEC VCO
TP400 DEC CHK
1SS304 PIN LAYOUT
TRANSISTOR PIN LAYOUT
LOT NO. 302-310
LOT NO. 302-306
LOT NO. 302-306 ONLY
NOTE;
ALL RESISTORS ARE 1/10W UNLESS OTHERWISE NOTED.
ALL CAPACITORS ARE 25V UNLESS OTHERWISE NOTED.
The Ref.Nos.marked with ** on the schematic diagram in this page are not printed on the printed circuit board(of the following board No.) with silk screen.
DIF-16 BOARD: 1-648-531-11

http://getMANUAL.com

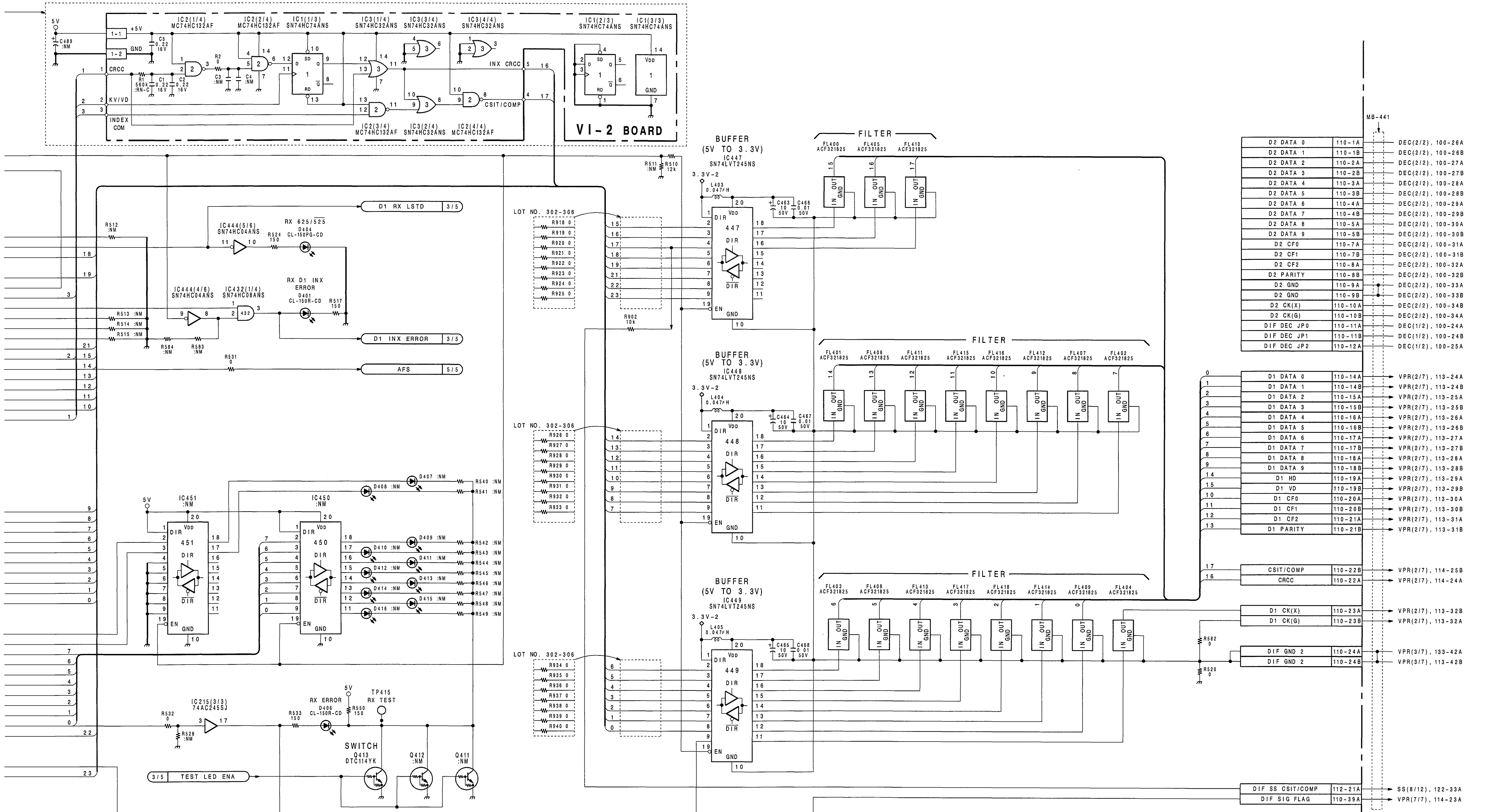

VI-2 BOARD

BOARD NO. 1-653-166-11

4:2:2 Component Serial Digital Interface Receiver

DIF-16 BOARD (4/5)

BOARD NO. 1-648-531-11, 12
BOARD' S LOT NO. 302-410
DVW-A500(J, UC) :DIF-16 MCB
DVW-A500P(EK) :DIF-16P MCB
DVW-A500P(UC) :DIF-16PG MCB
DVW-500 (J, UC) :DIF-16 MCB
DVW-500P (EK) :DIF-16P MCB
DVW-500P (UC) :DIF-16PG MCB

DVW-DIF16-ALL-REC-S/M-04-A

LOT NO.	BOARD NO.
302-306	1-648-531-11
307-410	1-648-531-12

 DIF-16 (5/5)

1

2

3

4

5

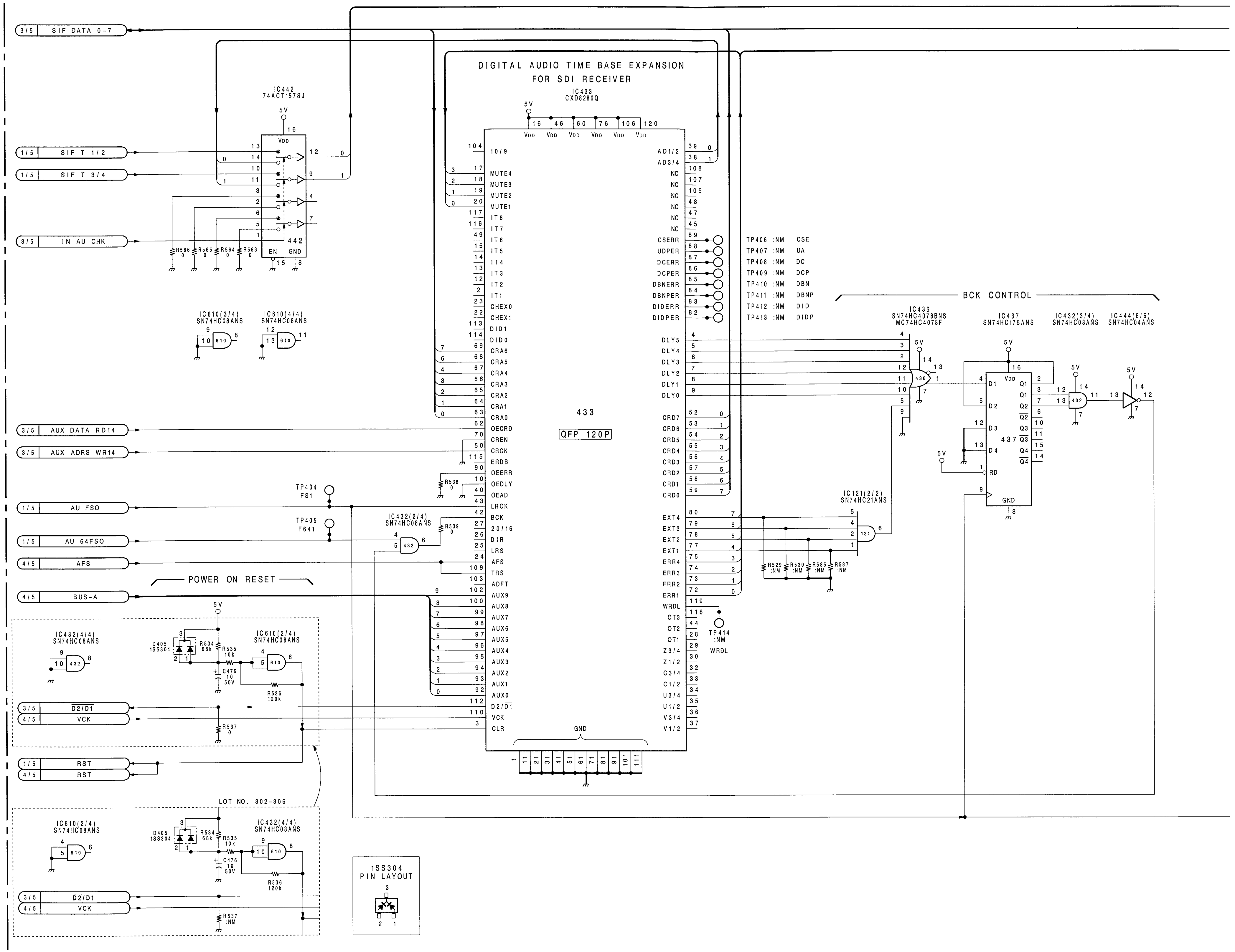

NOTE;
ALL RESISTORS ARE 1/10W UNLESS OTHERWISE NOTED.
ALL CAPACITORS ARE 25V UNLESS OTHERWISE NOTED.

 1-48 (a)

A	B	C	D	E	F	G	H

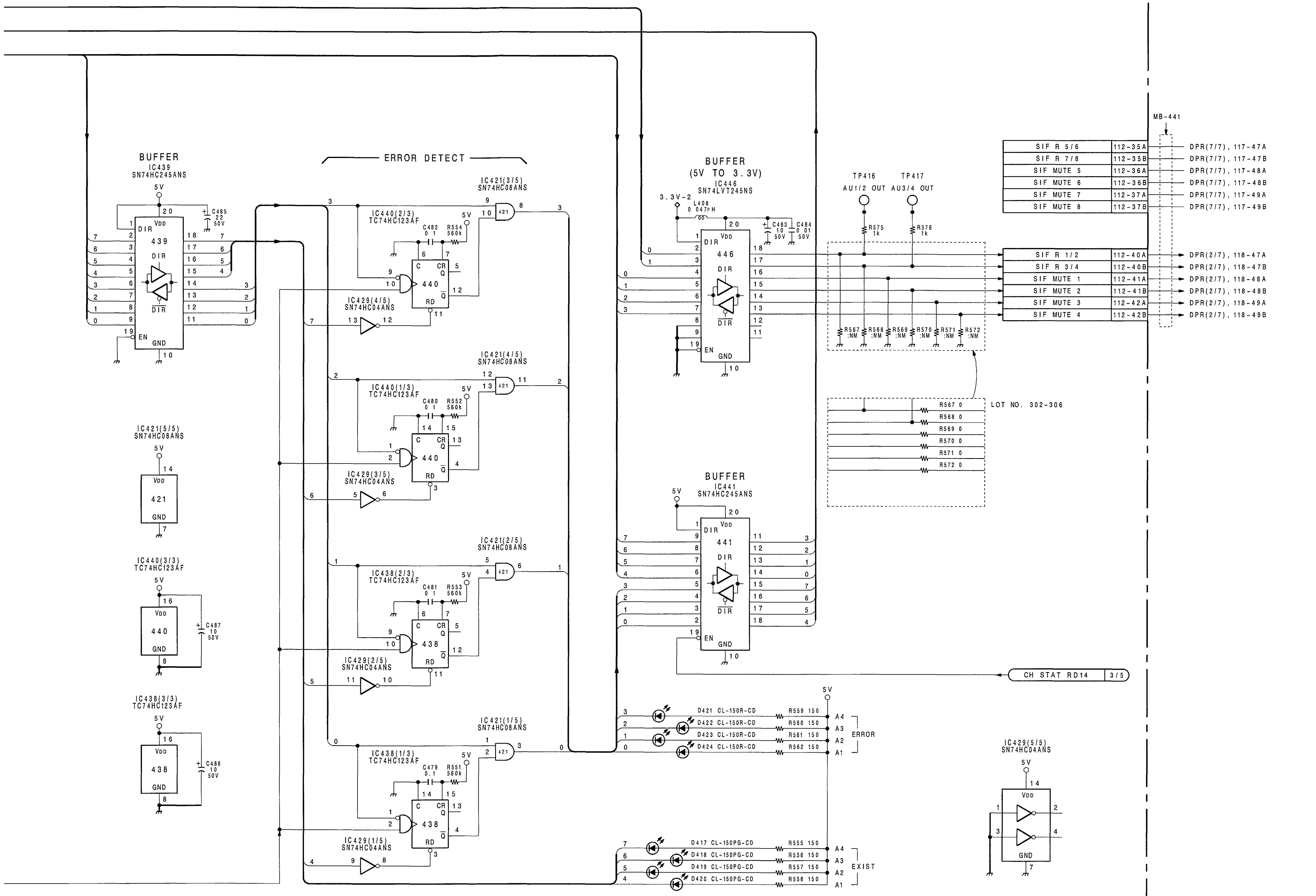

Digital Audio Timebase Expansion for 4:2:2 Component Serial Digital Interface Receiver

DIF-16 BOARD (5/5)

BOARD NO. 1-648-531-11, 12
BOARD' S LOT NO. 302-410
DVW-A500(J, UC) :DIF-16 MCB
DVW-A500P(EK) :DIF-16P MCB
DVW-A500P(UC) :DIF-16PG MCB
DVW-500 (J, UC) :DIF-16 MCB
DVW-500P (EK) :DIF-16P MCB
DVW-500P (UC) :DIF-16PG MCB
DVW-DIF16-ALL-REC-S/M-04-A

LOT NO.	BOARD NO.
302-306	1-648-531-11
307-410	1-648-531-12

1

2

3

4

5

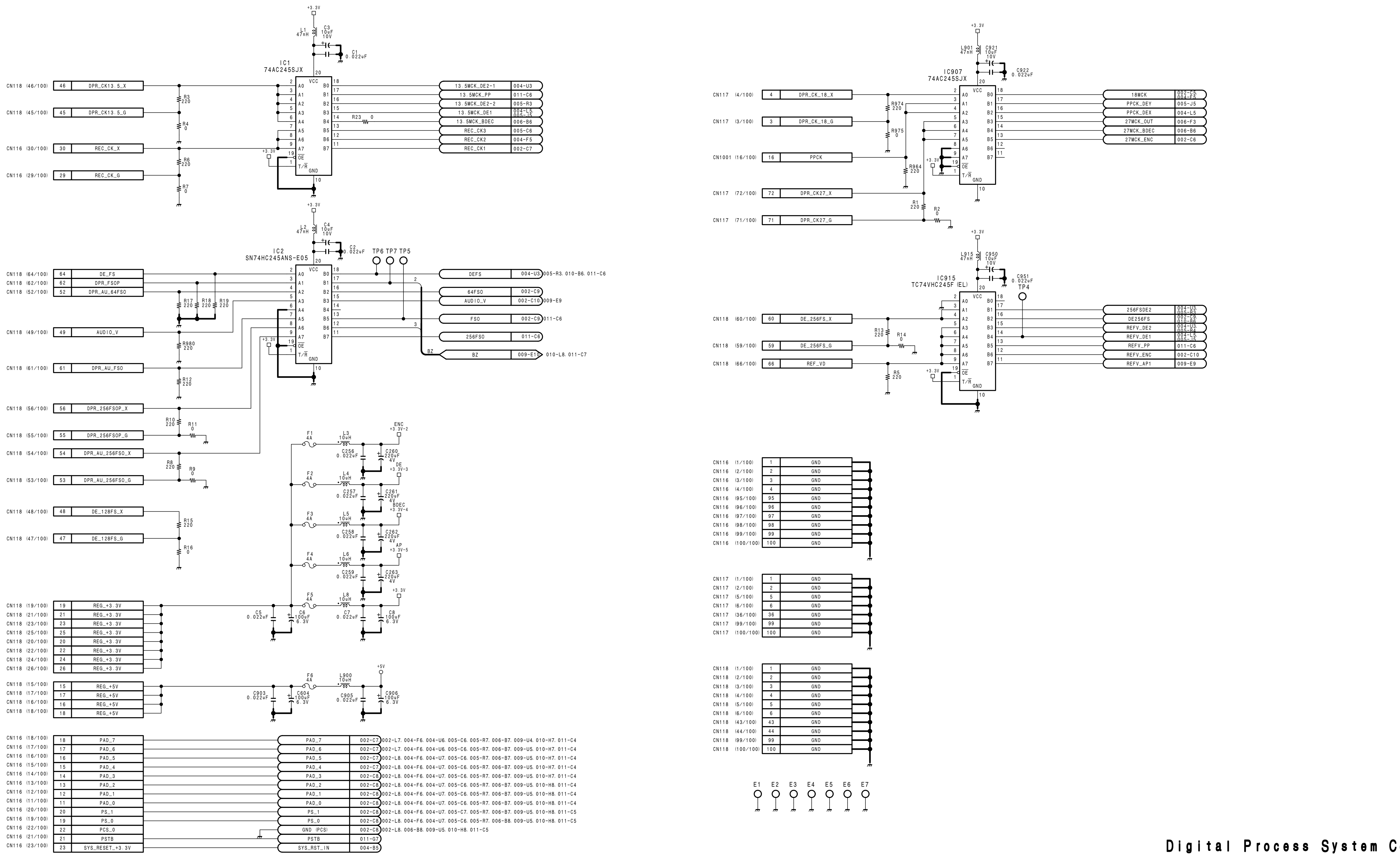

Digital Process System Control

DPR-36 BOARD (1/11)

BOARD NO. 1-648-533-14
BOARD'S LOT NO. 812-
DVW-A500 (J, UC) : DPR-36 MCB
DVW-A500P (EK) : DPR-36 MCB
DVW-A500P (UC) : DPR-36 MCB
DVW-500 (J, UC) : DPR-36 MCB
DVW-500P (EK) : DPR-36 MCB
DVW-500P (UC) : DPR-36 MCB

DVW-A500_DPR-36_001_1

A B C D E F G H

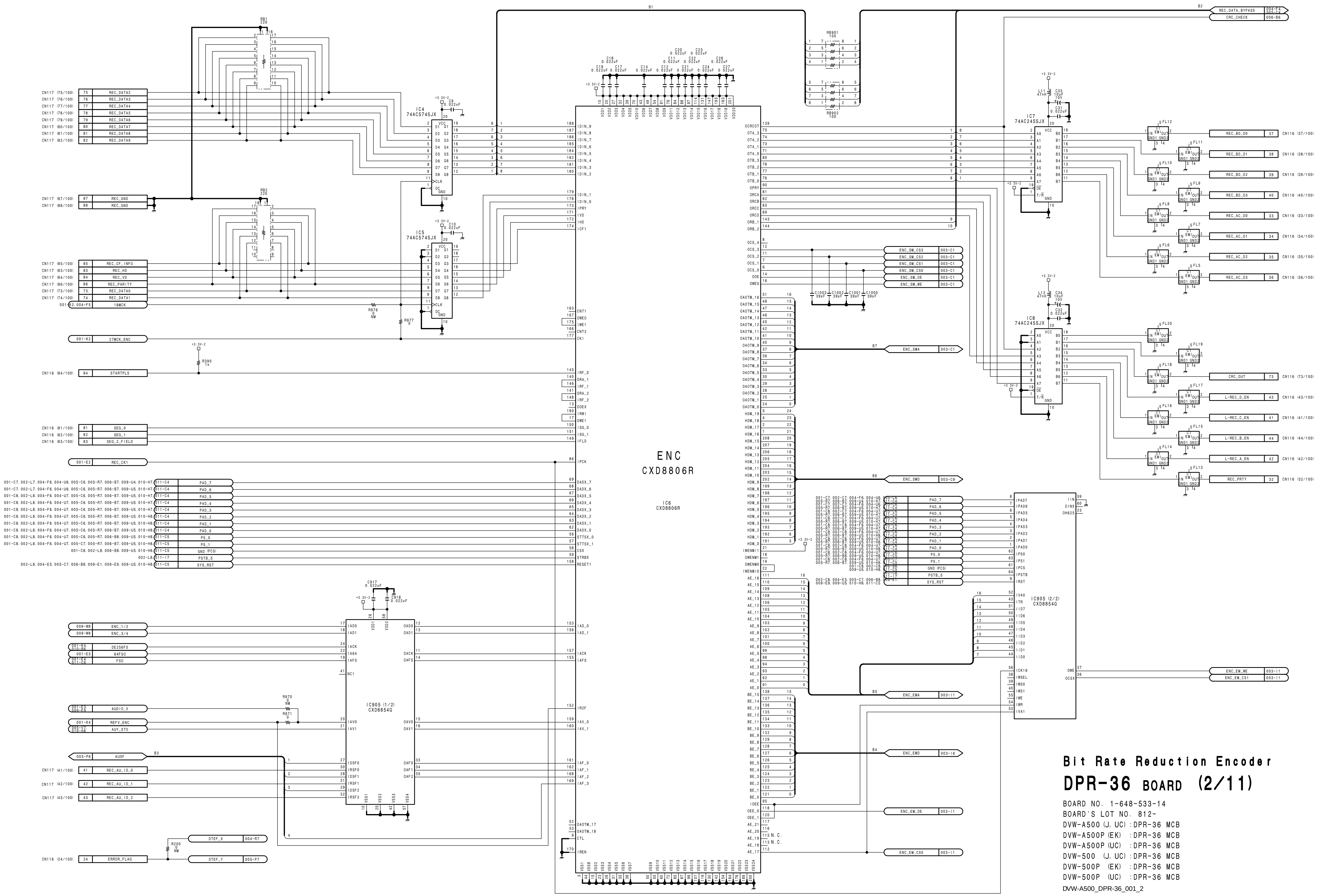

Bit Rate Reduction Encoder

DPR-36 BOARD (2/11)

BOARD NO. 1-648-533-14
BOARD'S LOT NO. 812-
DVW-A500 (J, UC) :DPR-36 MCB
DVW-A500P (EK) :DPR-36 MCB
DVW-A500P (UC) :DPR-36 MCB
DVW-500 (J, UC) :DPR-36 MCB
DVW-500P (EK) :DPR-36 MCB
DVW-500P (UC) :DPR-36 MCB

DVW-A500_DPR-36_001_2

 DPR-36 (3/11)

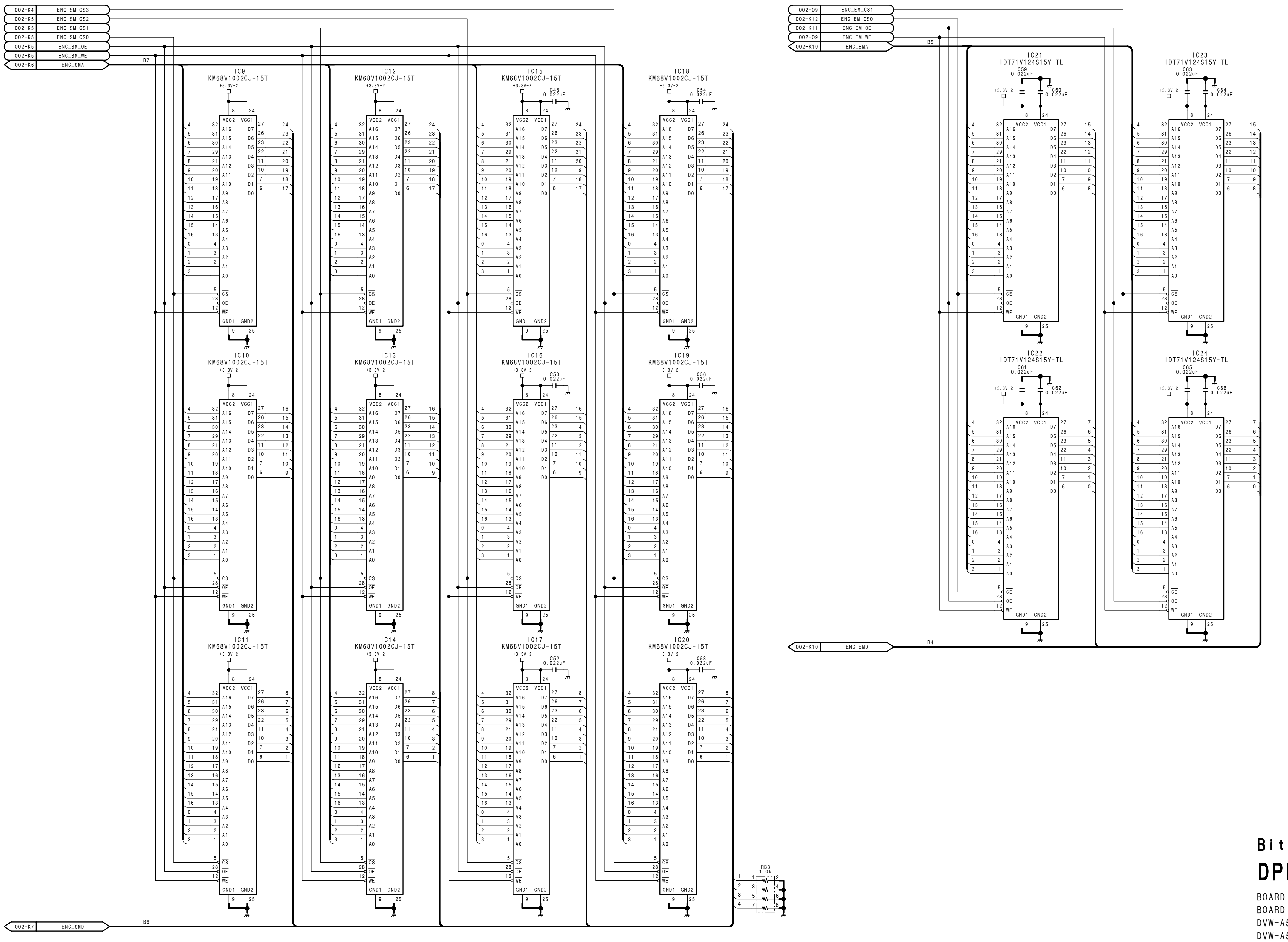

Bit Rate Reduction Encoder Memory

DPR-36 BOARD (3/11)

BOARD NO. 1-648-533-14
BOARD'S LOT NO. 812-
DVW-A500 (J, UC) : DPR-36 MCB
DVW-A500P (EK) : DPR-36 MCB
DVW-A500P (UC) : DPR-36 MCB
DVW-500 (J, UC) : DPR-36 MCB
DVW-500P (EK) : DPR-36 MCB
DVW-500P (UC) : DPR-36 MCB

DVW-A500_DPR-36_001_3

1

2

3

4

5

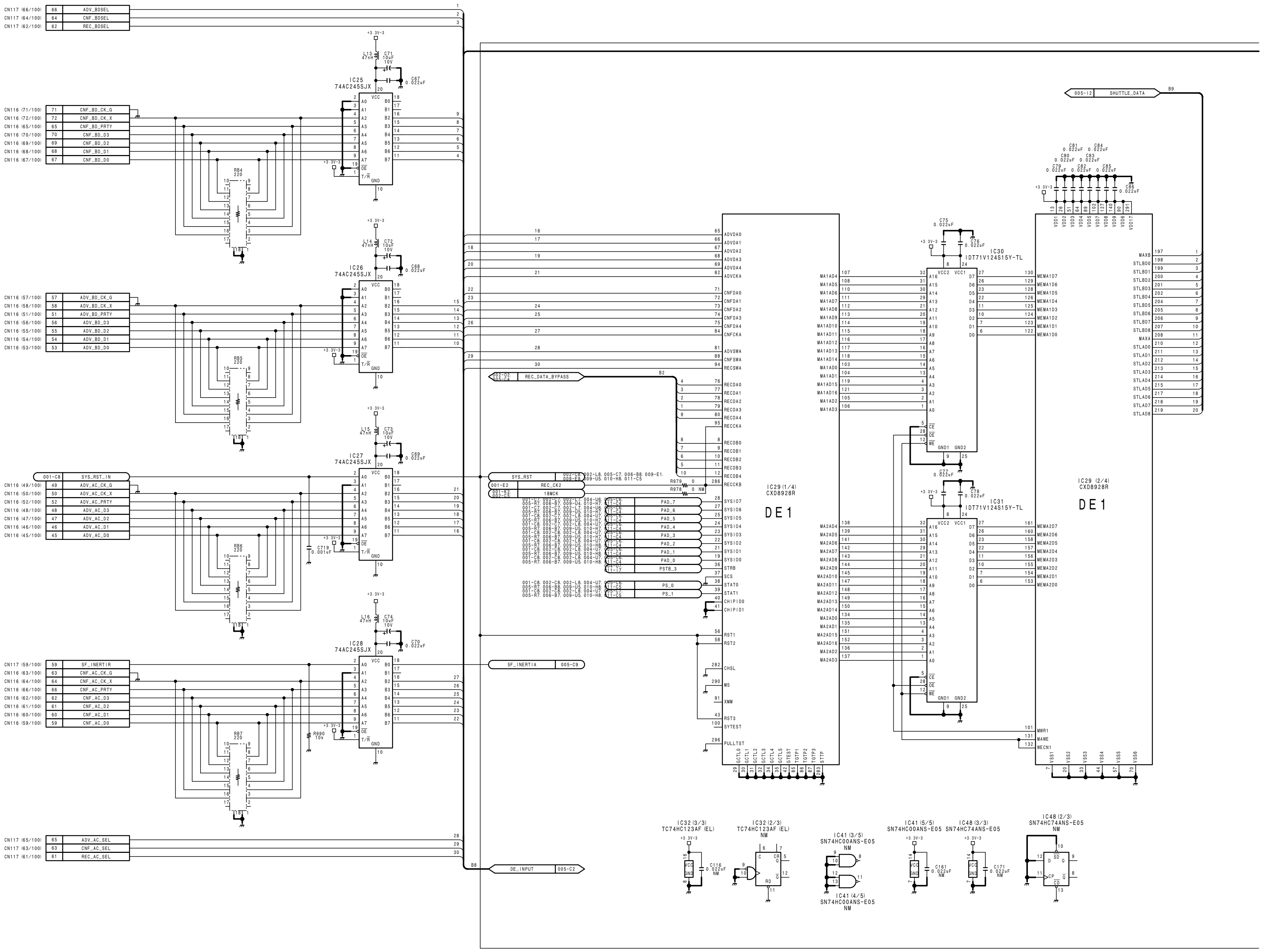

A B C D E F G H

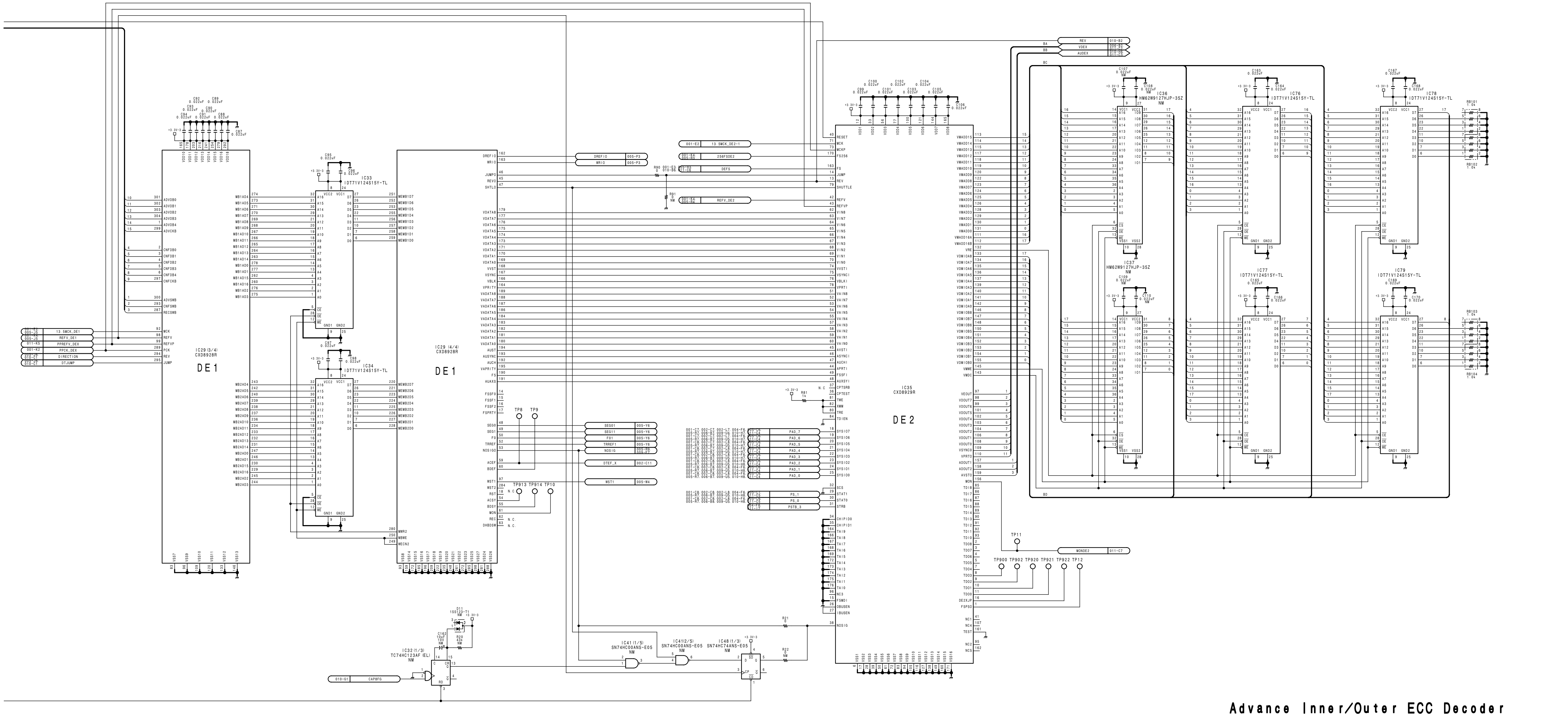

Advance Inner/Outer ECC Decoder

DPR-36 BOARD (4/11)

BOARD NO. 1-648-533-14
BOARD'S LOT NO. 812-
DVW-A500 (J, UC) : DPR-36 MCB
DVW-A500P (EK) : DPR-36 MCB
DVW-A500P (UC) : DPR-36 MCB
DVW-500 (J, UC) : DPR-36 MCB
DVW-500P (EK) : DPR-36 MCB
DVW-500P (UC) : DPR-36 MCB

DVW-A500_DPR-36_001_4

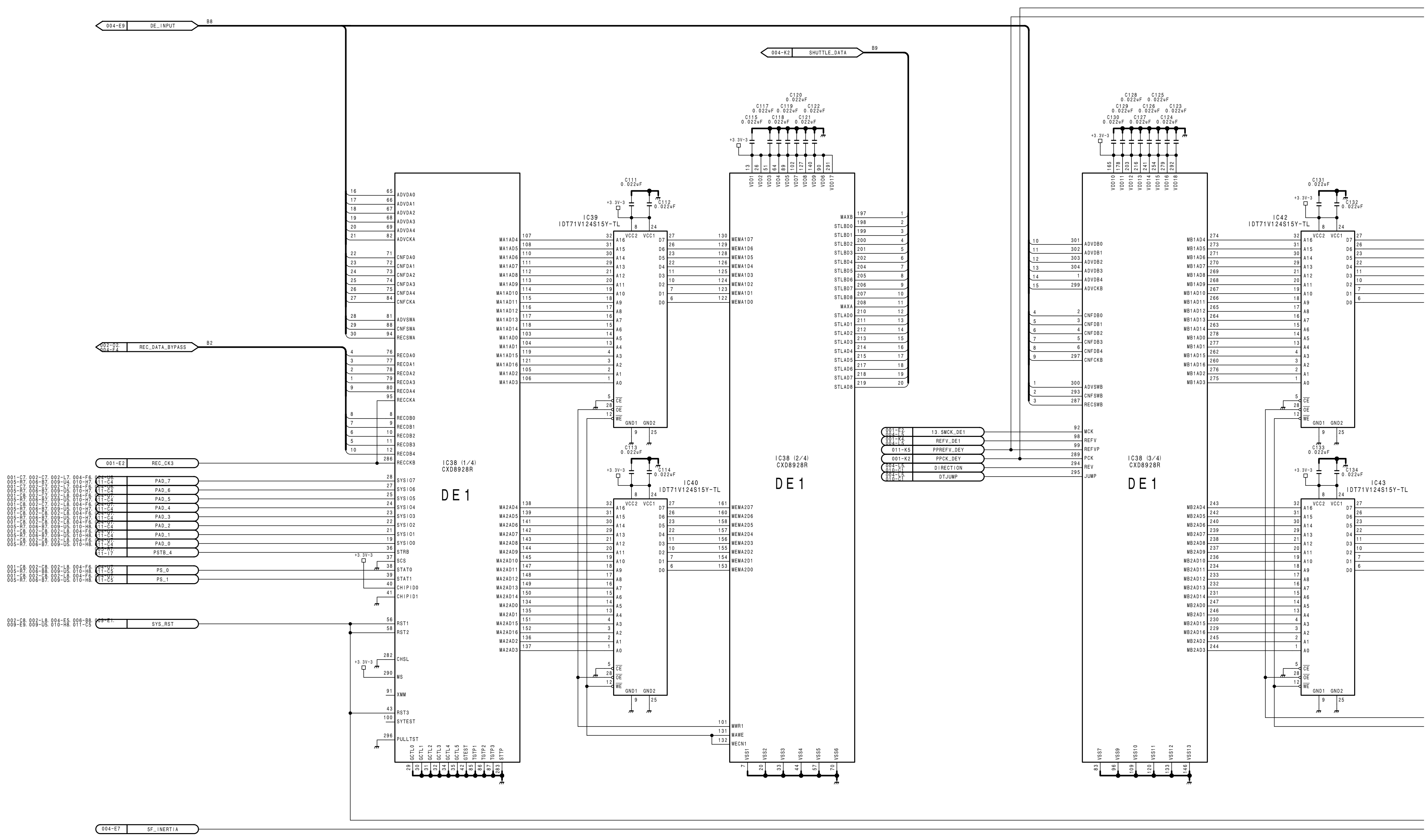

IC38 (1/4)
CXD8928R
DE1
IC38 (2/4)
CXD8928R
DE1
IC38 (3/4)
CXD8928R
DE1
IC39
IDT71V124S15Y-TL
IC40
IDT71V124S15Y-TL
IC42
IDT71V124S15Y-TL
IC43
IDT71V124S15Y-TL
DE_INPUT
SHUTTLE_DATA
REC_DATA_BYPASS
REC_CK3
SYS_RST
SF_INERTIA

http://getMANUAL.com

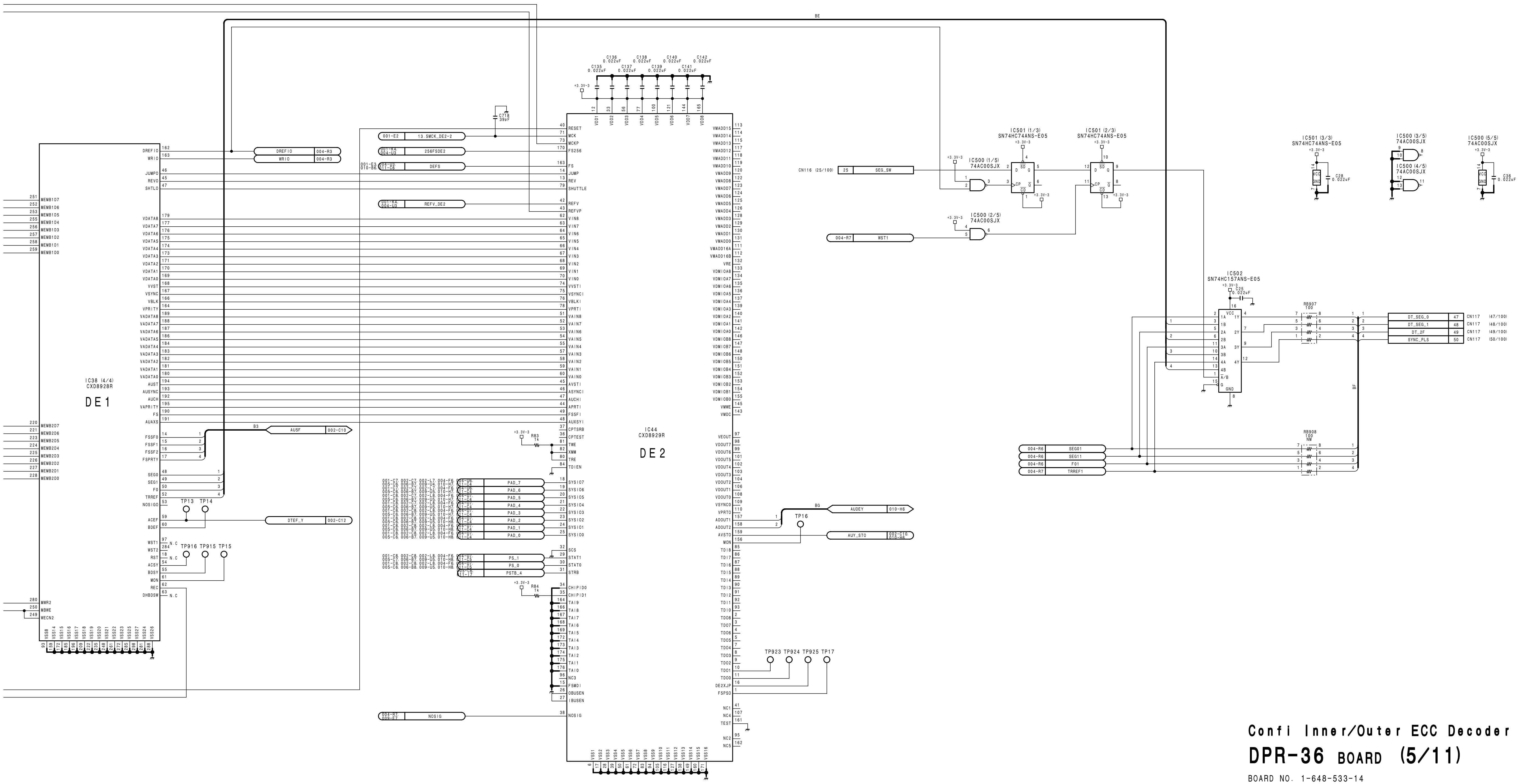

Confi Inner/Outer ECC Decoder

DPR-36 BOARD (5/11)

BOARD NO. 1-648-533-14
BOARD'S LOT NO. 812-
DVW-A500 (J, UC) : DPR-36 MCB
DVW-A500P (EK) : DPR-36 MCB
DVW-A500P (UC) : DPR-36 MCB
DVW-500 (J, UC) : DPR-36 MCB
DVW-500P (EK) : DPR-36 MCB
DVW-500P (UC) : DPR-36 MCB

DVW-A500_DPR-36_001_5

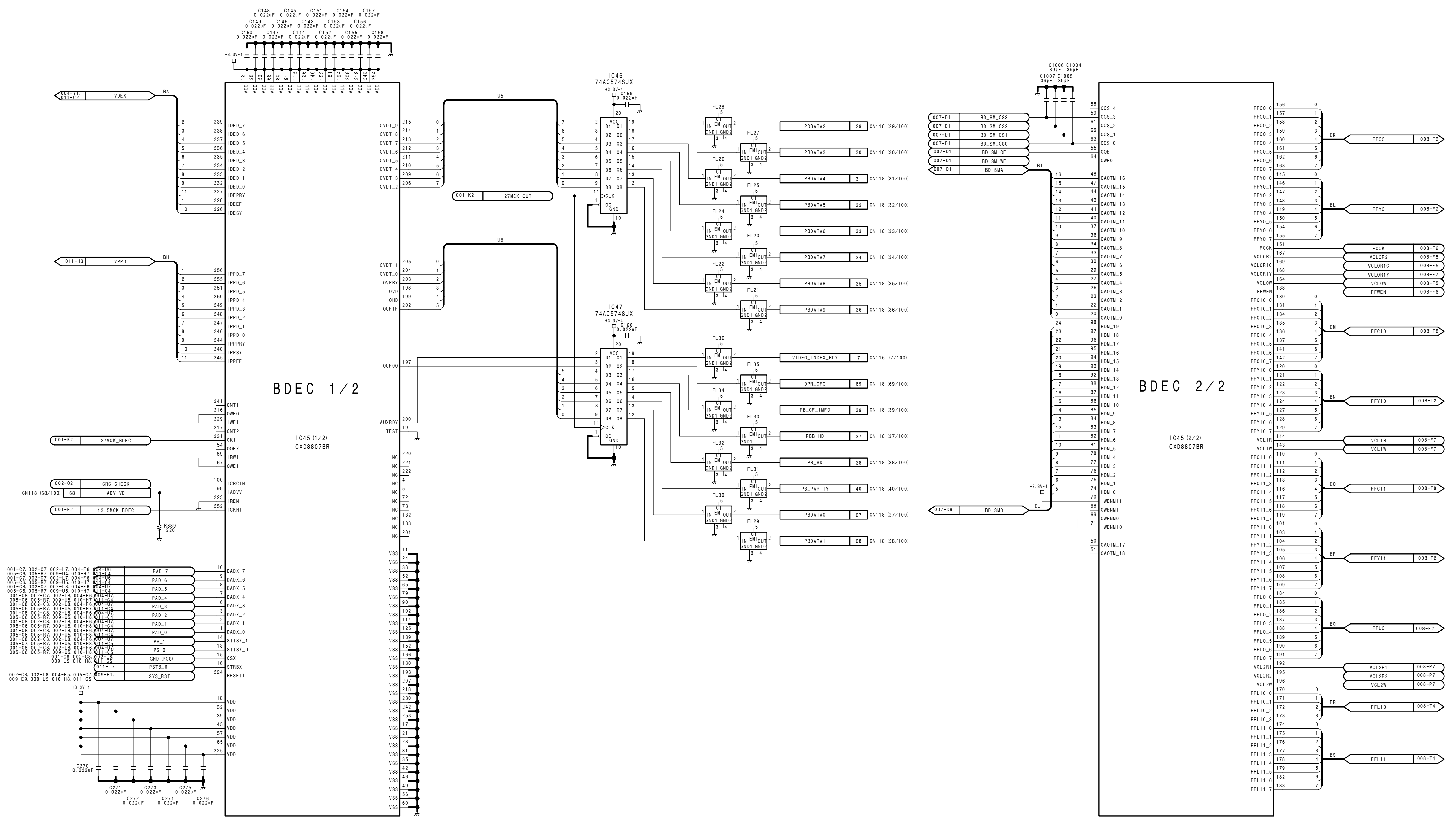

Bit Rate Reduction Decoder & Concealment Circuit

DPR-36 BOARD (6/11)

BOARD NO. 1-648-533-14
BOARD'S LOT NO. 812-
DVW-A500 (J, UC) :DPR-36 MCB
DVW-A500P (EK) :DPR-36 MCB
DVW-A500P (UC) :DPR-36 MCB
DVW-500 (J, UC) :DPR-36 MCB
DVW-500P (EK) :DPR-36 MCB
DVW-500P (UC) :DPR-36 MCB
DVW-A500_DPR-36_001_6

A B C D E F G H

DPR-36 (7/11)

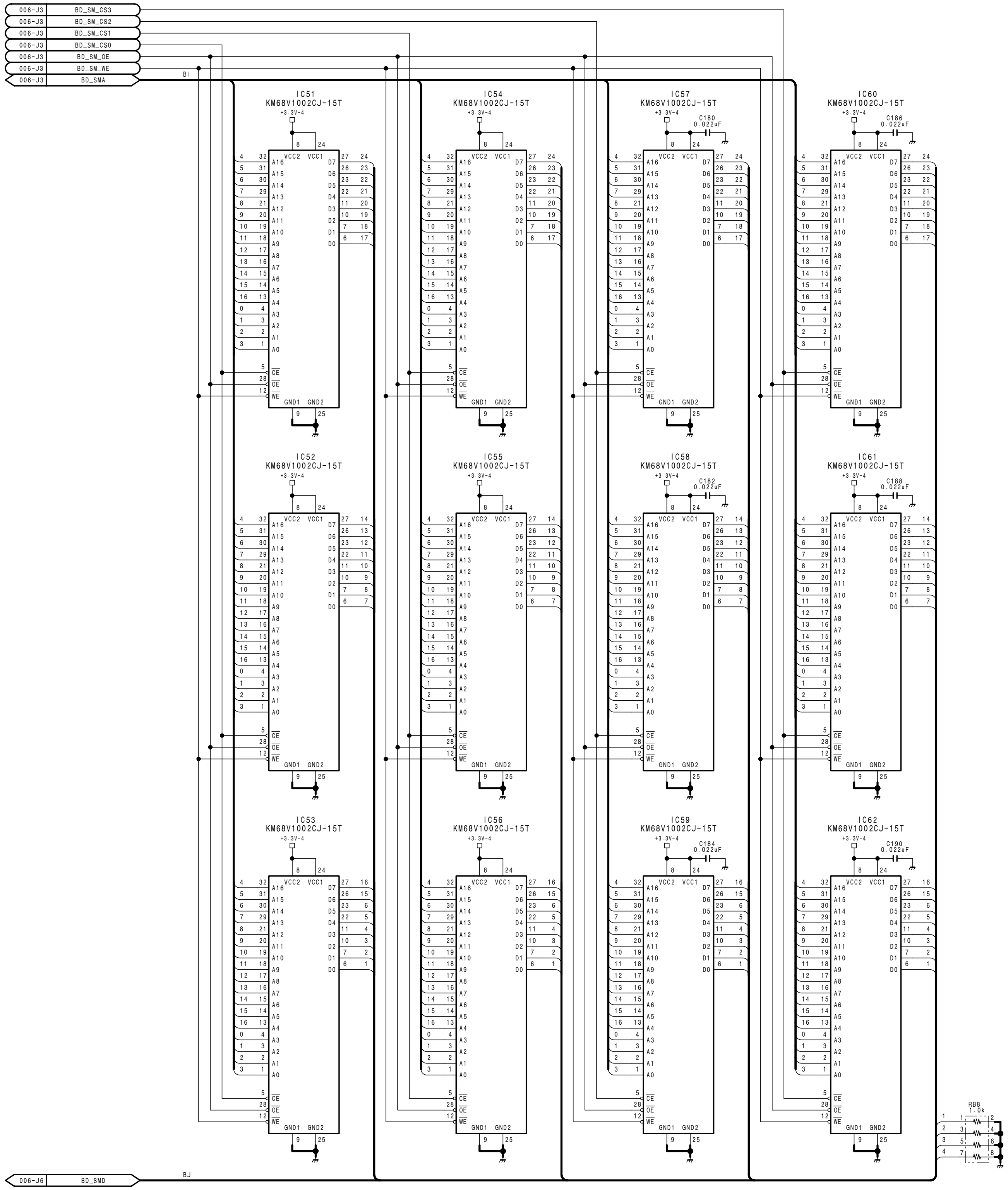

	LOT NO.	
	812-907	908-
IC51-IC62	IDT71V124S15Y-TL	KM68V1002CJ-15T

DE-Shuffling Memory

DPR-36 BOARD (7/11)

BOARD NO. 1-648-533-14
BOARD'S LOT NO. 812-
DVW-A500 (J, UC) :DPR-36 MCB
DVW-A500P (EK) :DPR-36 MCB
DVW-A500P (UC) :DPR-36 MCB
DVW-500 (J, UC) :DPR-36 MCB
DVW-500P (EK) :DPR-36 MCB
DVW-500P (UC) :DPR-36 MCB

DVW-A500_DPR-36_001_7

1-59 (d)

 DPR-36 (8/11)

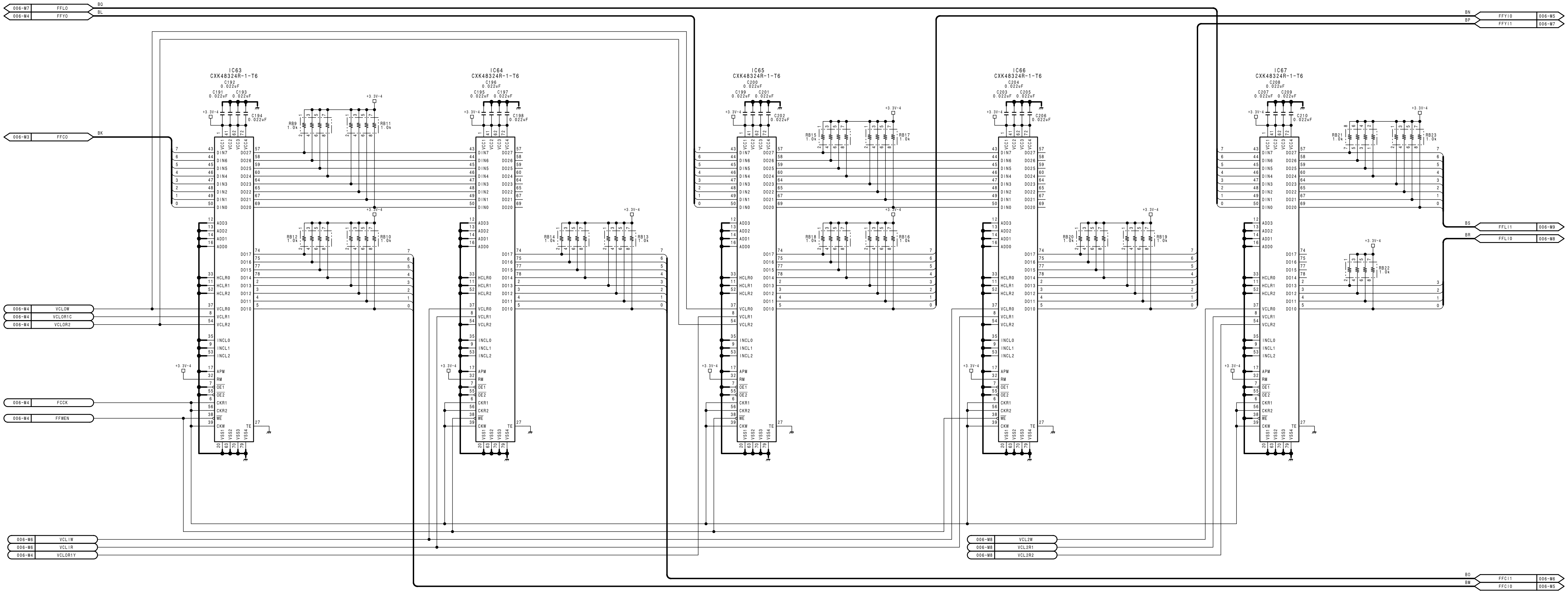

Concealment FIFO Memory

DPR-36 BOARD (8/11)

BOARD NO. 1-648-533-14
BOARD'S LOT NO. 812-
DVW-A500 (J, UC) : DPR-36 MCB
DVW-A500P (EK) : DPR-36 MCB
DVW-A500P (UC) : DPR-36 MCB
DVW-500 (J, UC) : DPR-36 MCB
DVW-500P (EK) : DPR-36 MCB
DVW-500P (UC) : DPR-36 MCB
DVW-A500_DPR-36_001_8

DPR-36 (9/11)

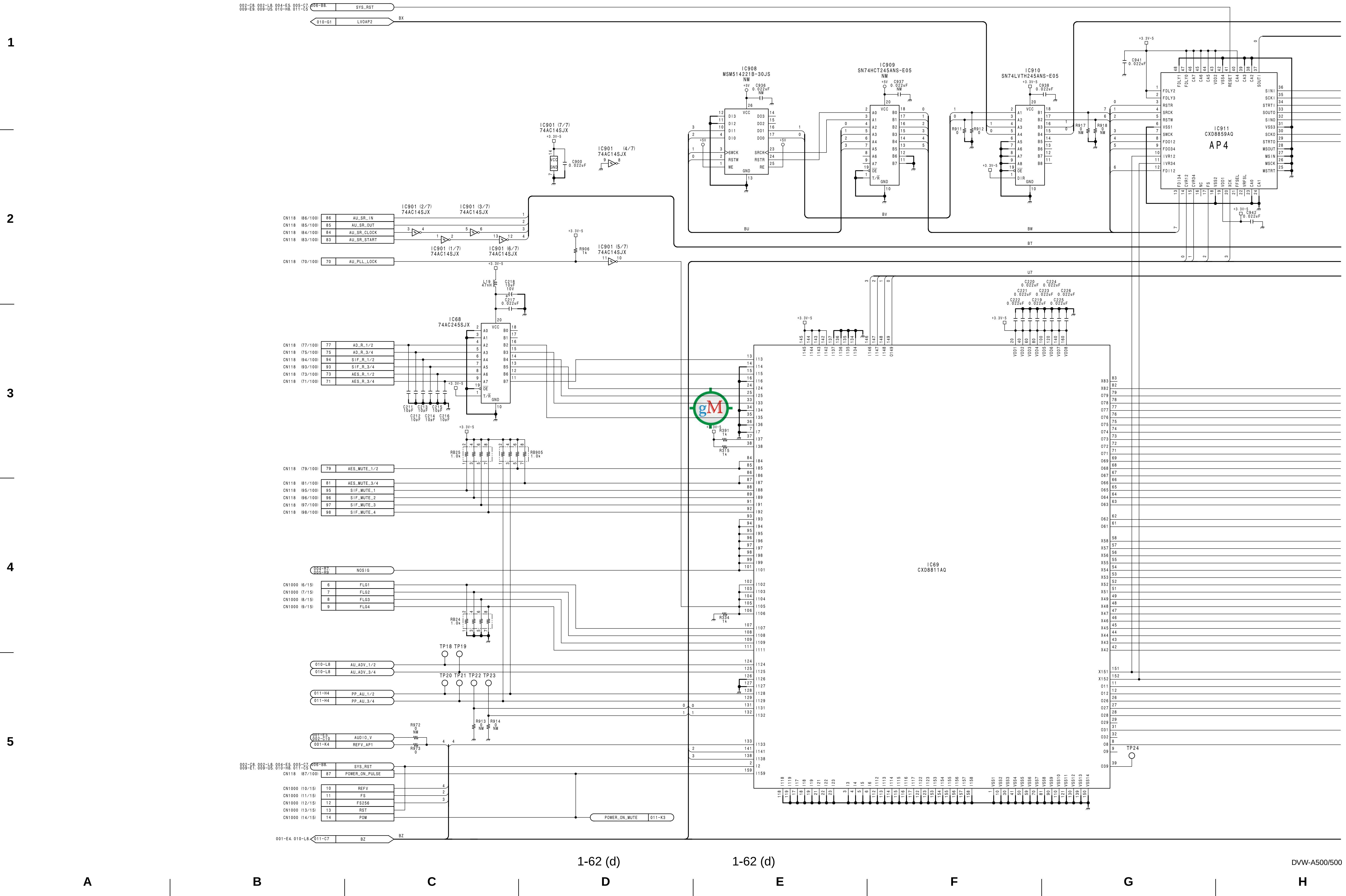

1-62 (d)

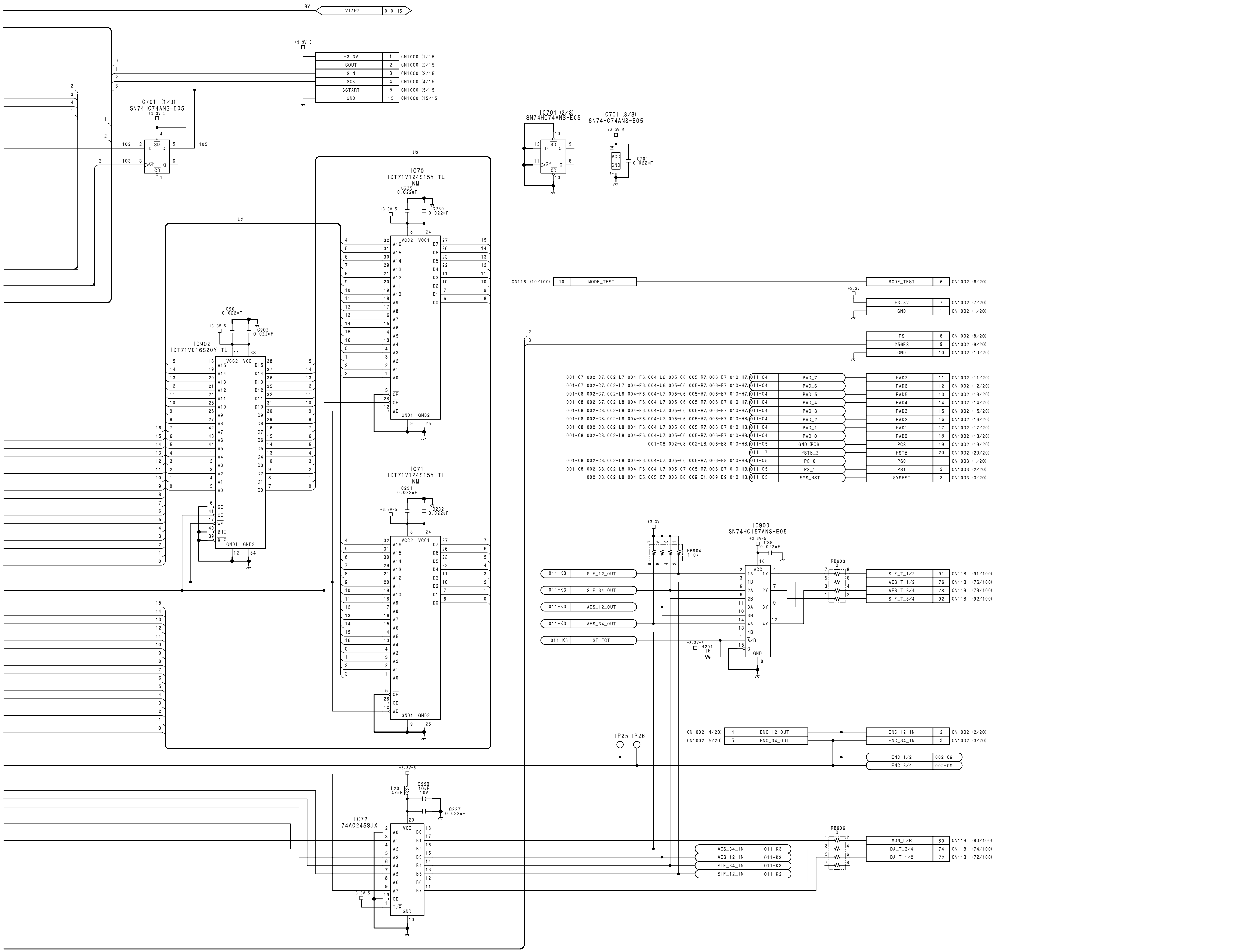

Audio Data Processor

DPR-36 BOARD (9/11)

BOARD NO. 1-648-533-14
BOARD'S LOT NO. 812-
DVW-A500 (J, UC) : DPR-36 MCB
DVW-A500P (EK) : DPR-36 MCB
DVW-A500P (UC) : DPR-36 MCB
DVW-500 (J, UC) : DPR-36 MCB
DVW-500P (EK) : DPR-36 MCB
DVW-500P (UC) : DPR-36 MCB

DVW-A500_DPR-36_001_9

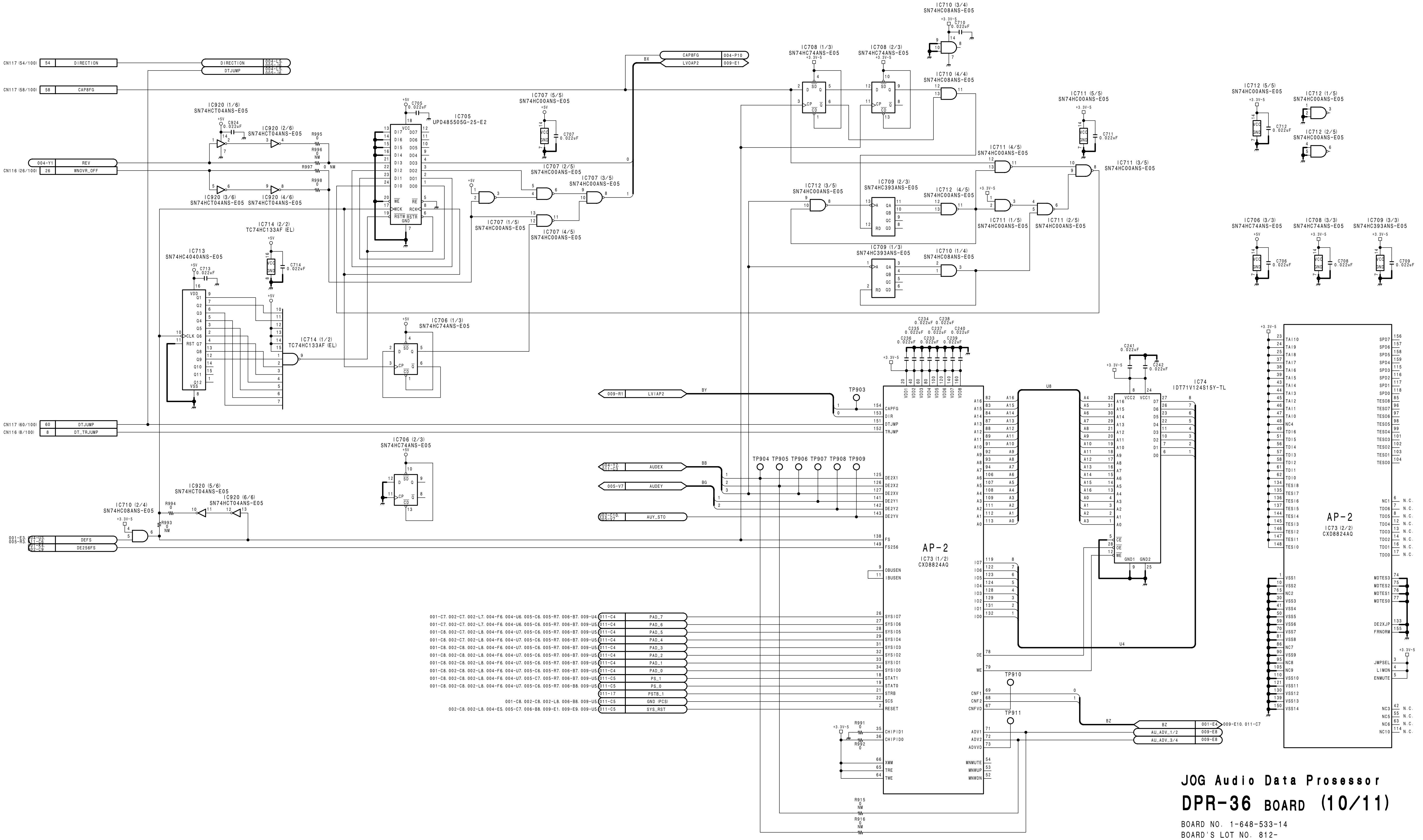

JOG Audio Data Prosessor

DPR-36 BOARD (10/11)

BOARD NO. 1-648-533-14
BOARD'S LOT NO. 812-
DVW-A500 (J, UC) :DPR-36 MCB
DVW-A500P (EK) :DPR-36 MCB
DVW-A500P (UC) :DPR-36 MCB
DVW-500 (J, UC) :DPR-36 MCB
DVW-500P (EK) :DPR-36 MCB
DVW-500P (UC) :DPR-36 MCB

DVW-A500_DPR-36_001_10

 DPR-36 (11/11)

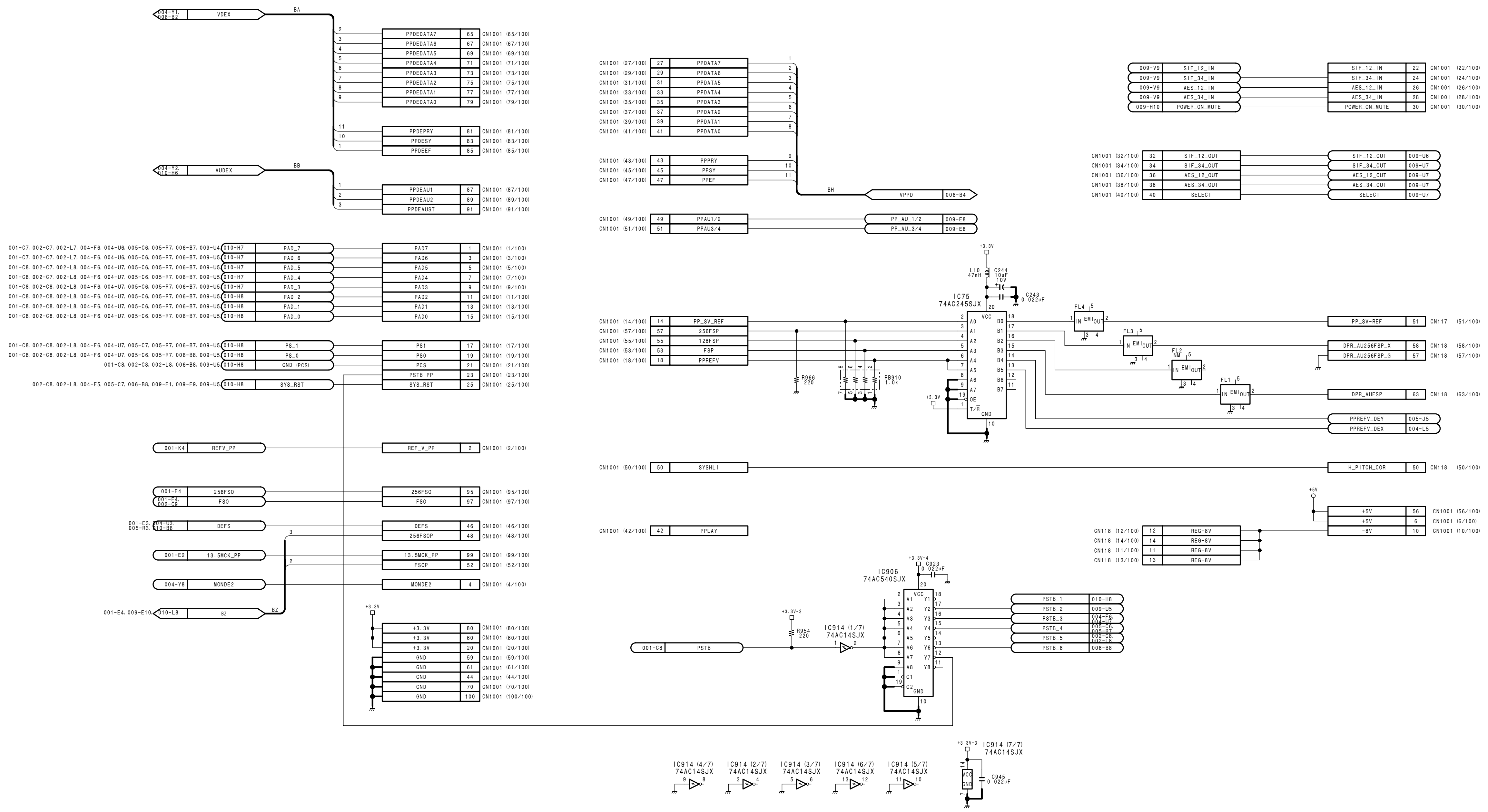

Program Play Board Interface
DPR-36 BOARD (11/11)

BOARD NO. 1-648-533-14
BOARD'S LOT NO. 812-
DVW-A500 (J, UC) : DPR-36 MCB
DVW-A500P (EK) : DPR-36 MCB
DVW-A500P (UC) : DPR-36 MCB
DVW-500 (J, UC) : DPR-36 MCB
DVW-500P (EK) : DPR-36 MCB
DVW-500P (UC) : DPR-36 MCB

DVW-A500_DPR-36_001_11

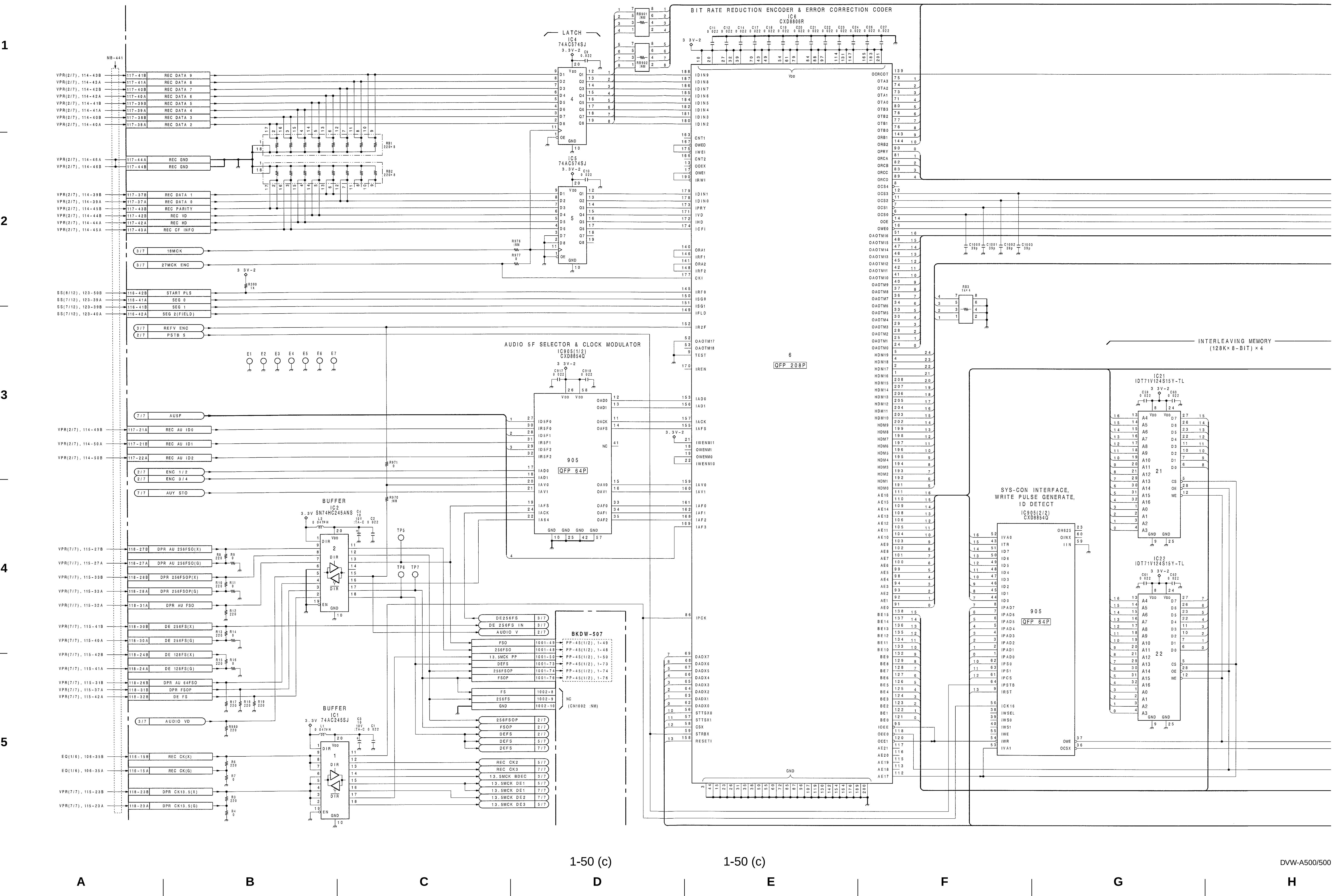
BIT RATE REDUCTION ENCODER & ERROR CORRECTION CODER
IC6
CXD8806R
LATCH
IC4
74AC574SJ
IC5
74AC574SJ
AUDIO 5F SELECTOR & CLOCK MODULATOR
IC905(1/2)
CXD8854Q
BUFFER
IC2
SN74HC245ANS
BUFFER
IC1
74AC245SJ
BKDW-507
INTERLEAVING MEMORY
(128K×8-BIT)×4
IC21
IDT71V124S15Y-TL
IC22
IDT71V124S15Y-TL
SYS-CON INTERFACE,
WRITE PULSE GENERATE,
ID DETECT
IC905(2/2)
CXD8854Q
QFP 208P
QFP 64P
MB-441

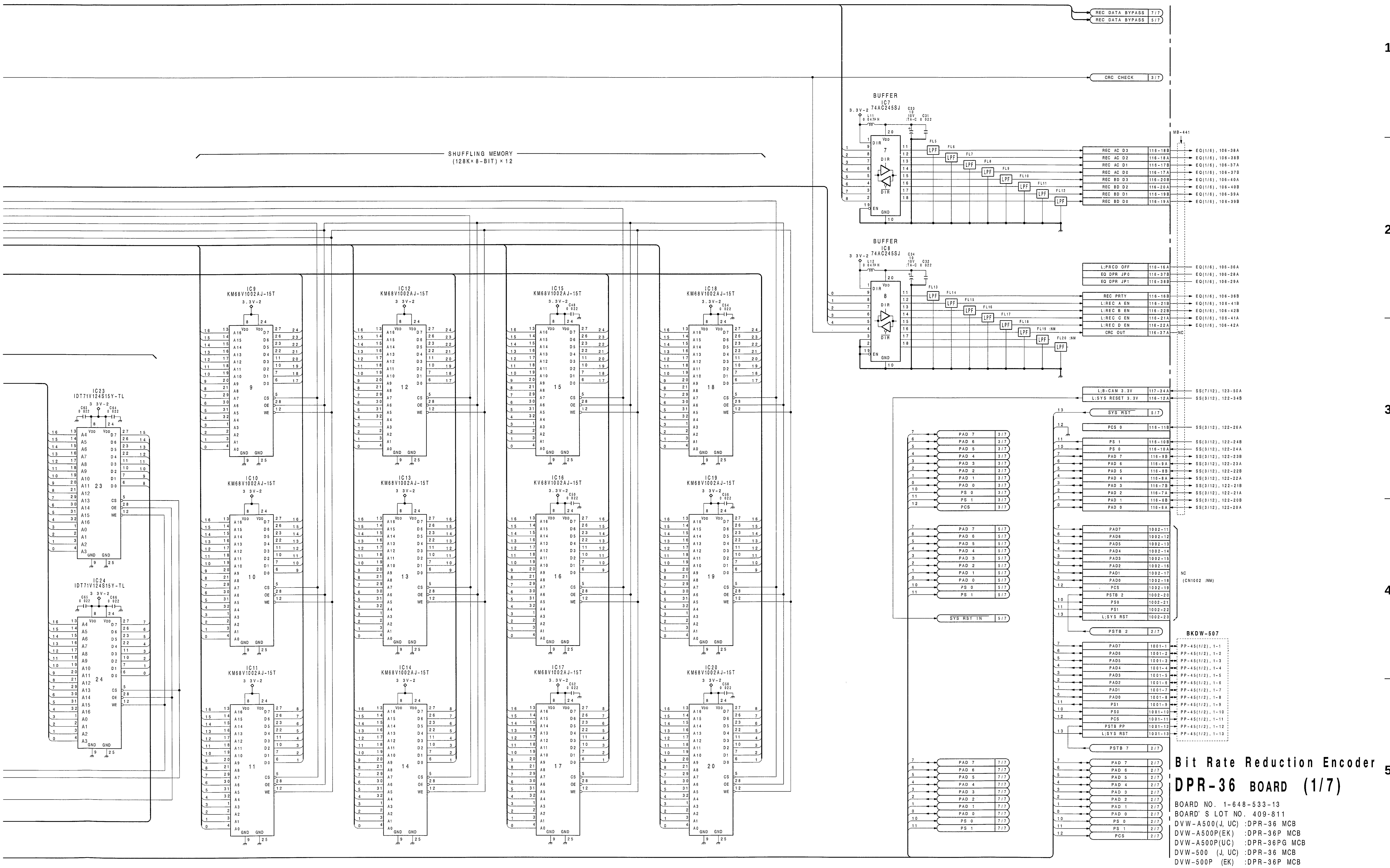

Bit Rate Reduction Encoder
DPR-36 BOARD (1/7)

BOARD NO. 1-648-533-13
BOARD' S LOT NO. 409-811
DVW-A500(J, UC) :DPR-36 MCB
DVW-A500P(EK) :DPR-36P MCB
DVW-A500P(UC) :DPR-36PG MCB
DVW-500 (J, UC) :DPR-36 MCB
DVW-500P (EK) :DPR-36P MCB
DVW-500P (UC) :DPR-36PG MCB

DPR-36 (2/7)

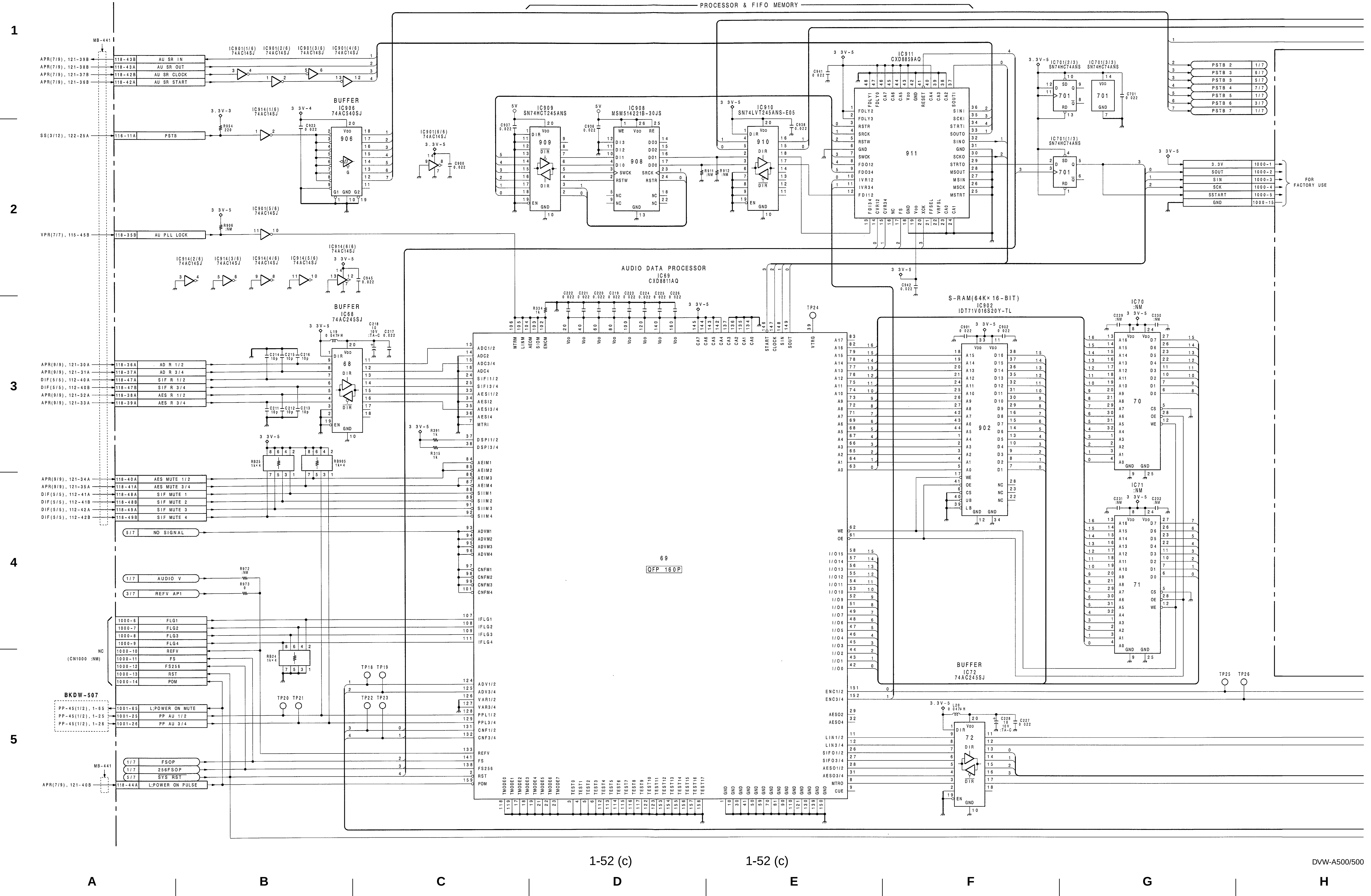

1-52 (c)

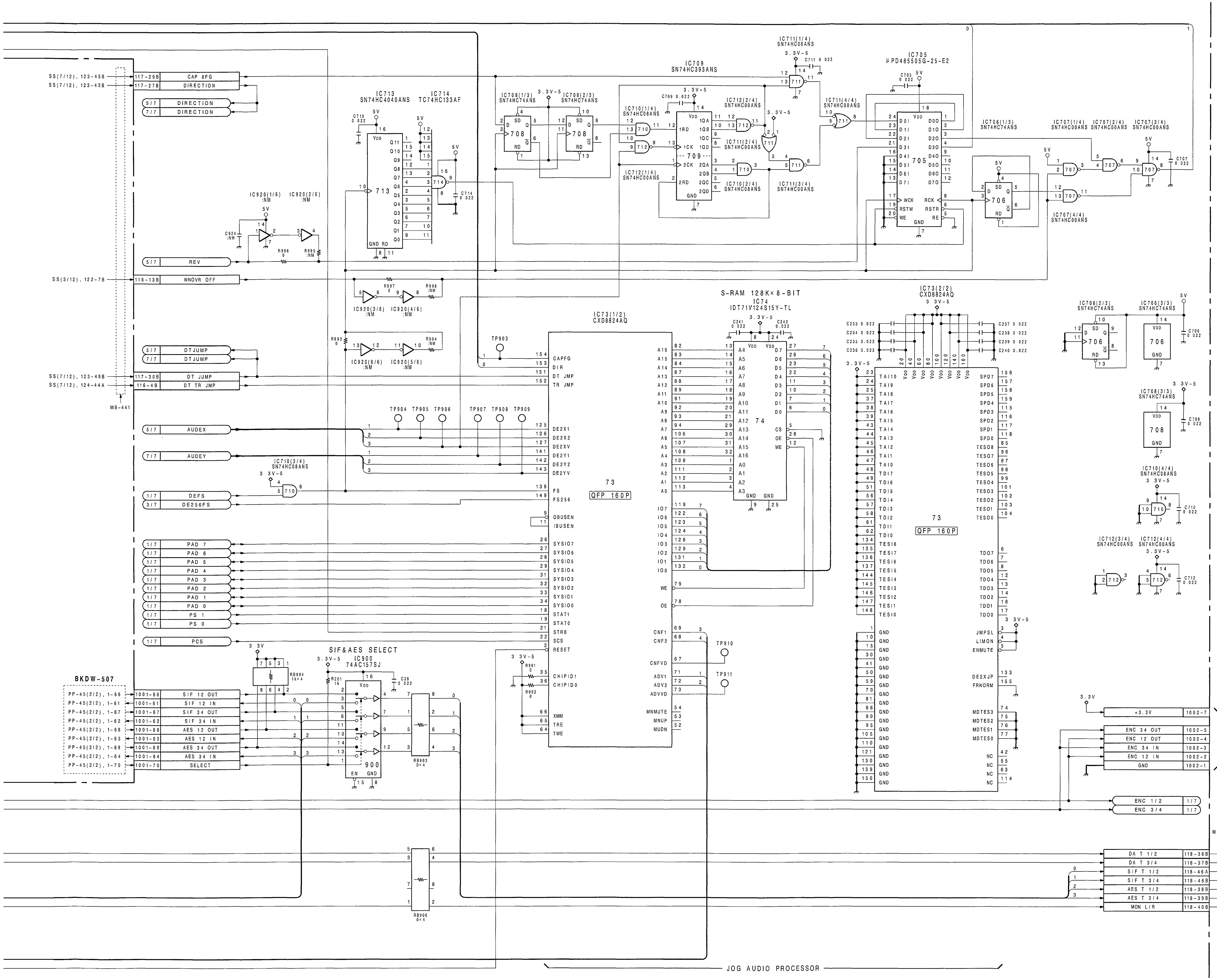

Audio Data Processor, Jog Audio Data Processor

DPR-36 BOARD (2/7)

BOARD NO. 1-648-533-13
BOARD' S LOT NO. 409-811
DVW-A500(J, UC) :DPR-36 MCB
DVW-A500P(EK) :DPR-36P MCB
DVW-A500P(UC) :DPR-36PG MCB
DVW-500 (J, UC) :DPR-36 MCB
DVW-500P (EK) :DPR-36P MCB
DVW-500P (UC) :DPR-36PG MCB

DVW-DPR36-ALL-REC-SIM-02-C

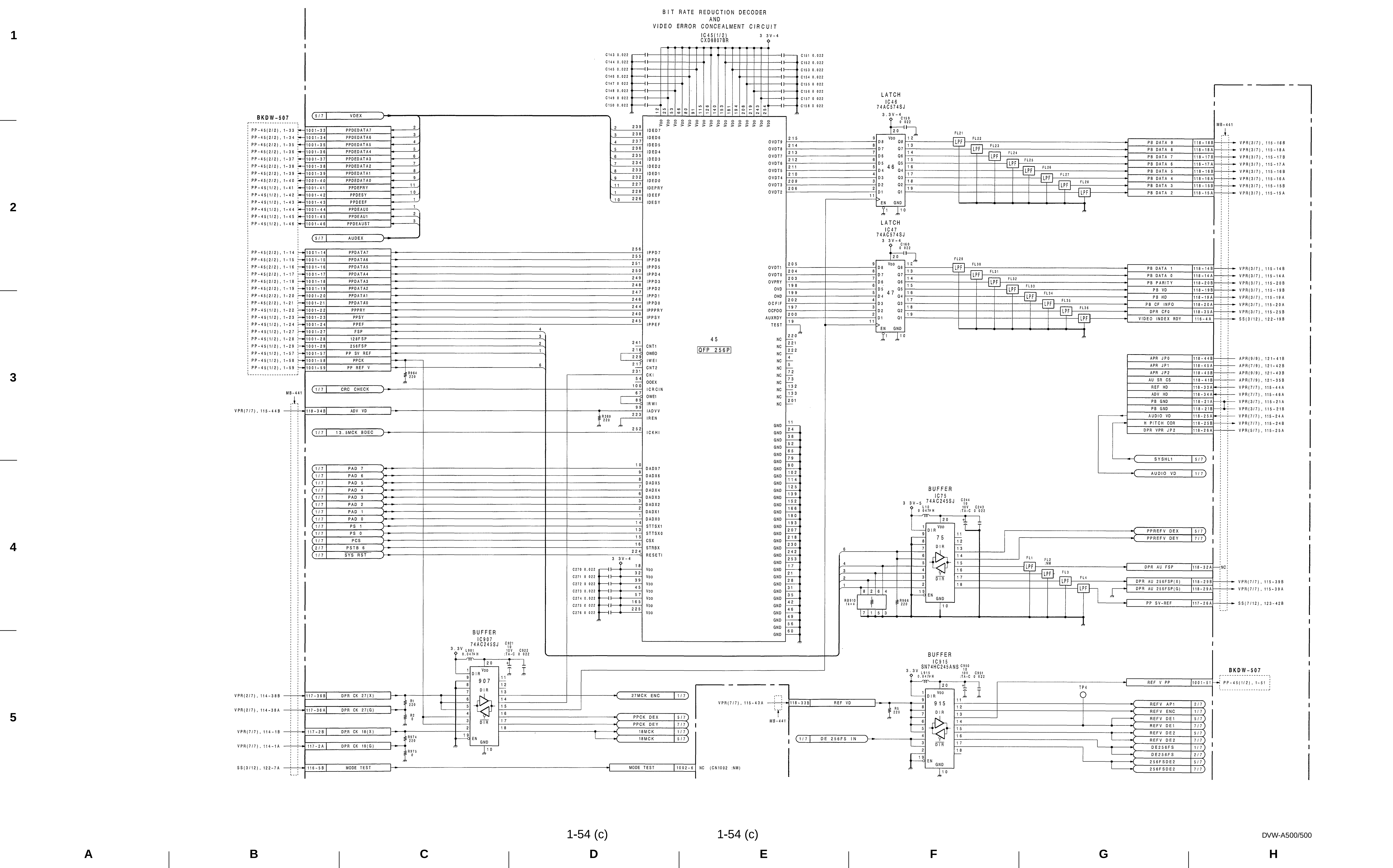
BIT RATE REDUCTION DECODER
AND
VIDEO ERROR CONCEALMENT CIRCUIT
IC45(1/2)
CXD8807BR
LATCH
IC46
74AC574SJ
LATCH
IC47
74AC574SJ
BUFFER
IC75
74AC245SJ
BUFFER
IC907
74AC245SJ
BUFFER
IC915
SN74HC245ANS
BKDW-507
MB-441
QFP 256P

 DPR-36 (3/7)

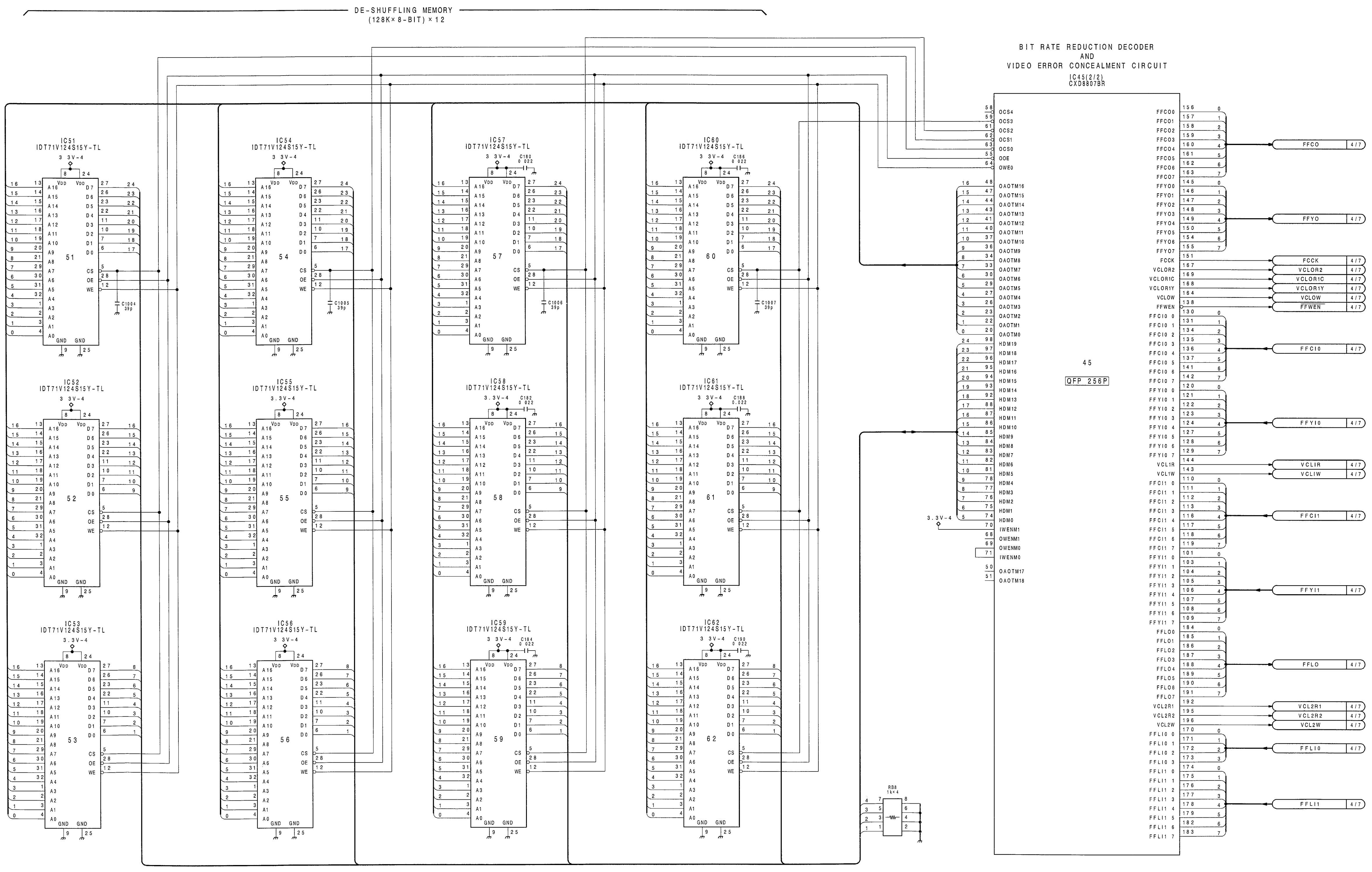

BIT Rate Reduction Decoder, Concealment Circuit

DPR-36 BOARD (3/7)

BOARD NO. 1-648-533-13
BOARD' S LOT NO. 409-811
DVW-A500(J, UC) :DPR-36 MCB
DVW-A500P(EK) :DPR-36P MCB
DVW-A500P(UC) :DPR-36PG MCB
DVW-500 (J, UC) :DPR-36 MCB
DVW-500P (EK) :DPR-36P MCB
DVW-500P (UC) :DPR-36PG MCB

 1-55 (c)

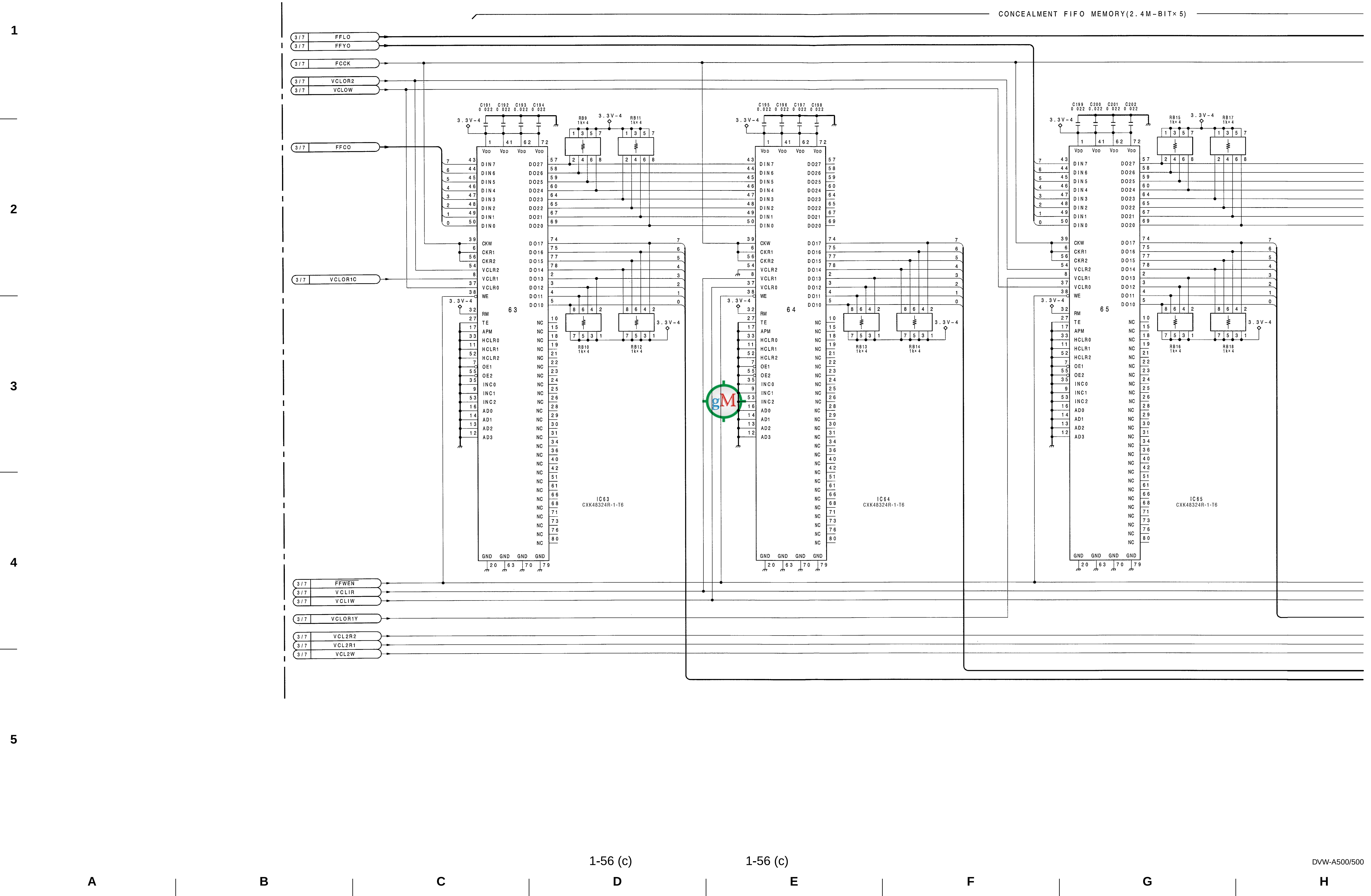
CONCEALMENT FIFO MEMORY(2.4M-BIT×5)
3/7 FFLO
3/7 FFYO
3/7 FCCK
3/7 VCLOR2
3/7 VCLOW
3/7 FFCO
3/7 VCLOR1C
3/7 FFWEN
3/7 VCLIR
3/7 VCLIW
3/7 VCLOR1Y
3/7 VCL2R2
3/7 VCL2R1
3/7 VCL2W
C191 0.022 C192 0.022 C193 0.022 C194 0.022
C195 0.022 C196 0.022 C197 0.022 C198 0.022
C199 0.022 C200 0.022 C201 0.022 C202 0.022
3.3V-4
RB9 1k×4
RB10 1k×4
RB11 1k×4
RB12 1k×4
RB13 1k×4
RB14 1k×4
RB15 1k×4
RB16 1k×4
RB17 1k×4
RB18 1k×4
IC63 CXK48324R-1-T6
IC64 CXK48324R-1-T6
IC65 CXK48324R-1-T6
VDD VDD VDD VDD
DIN7 DIN6 DIN5 DIN4 DIN3 DIN2 DIN1 DIN0
DO27 DO26 DO25 DO24 DO23 DO22 DO21 DO20
CKW CKR1 CKR2 VCLR2 VCLR1 VCLR0 WE
DO17 DO16 DO15 DO14 DO13 DO12 DO11 DO10
RM TE APM HCLR0 HCLR1 HCLR2 OE1 OE2 INC0 INC1 INC2 AD0 AD1 AD2 AD3
NC
GND GND GND GND
1 2 3 4 5
A B C D E F G H

 DPR-36 (4/7)

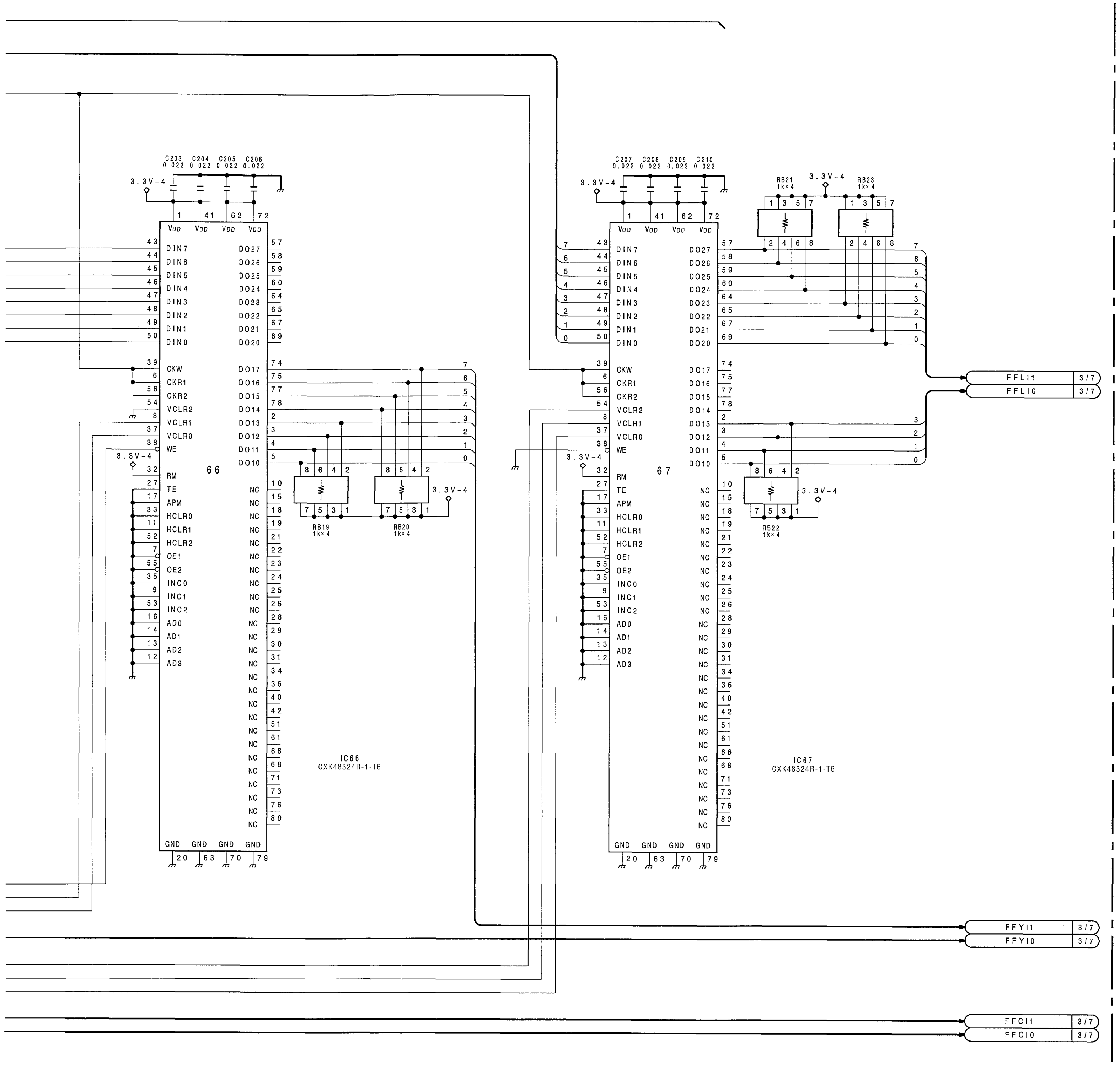

Concealment FIFO Memory

DPR-36 BOARD (4/7)

BOARD NO. 1-648-533-13
BOARD' S LOT NO. 409-811
DVW-A500(J, UC) :DPR-36 MCB
DVW-A500P(EK) :DPR-36P MCB
DVW-A500P(UC) :DPR-36PG MCB
DVW-500 (J, UC) :DPR-36 MCB
DVW-500P (EK) :DPR-36P MCB
DVW-500P (UC) :DPR-36PG MCB

DVW-DPR36-ALL-REC-SIM-02-C

I J K L M N O P

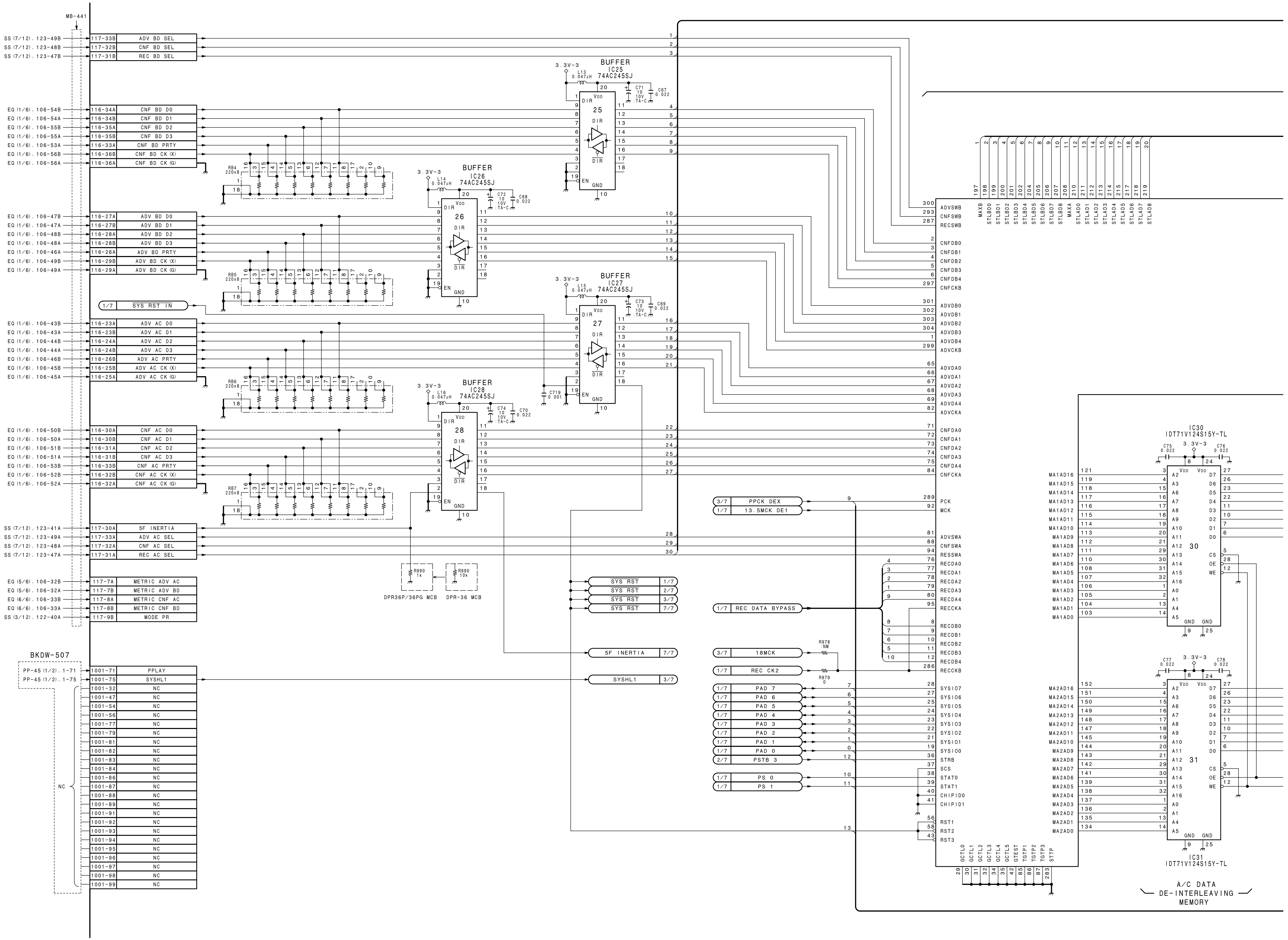
MB-441
BUFFER IC25 74AC245SJ
BUFFER IC26 74AC245SJ
BUFFER IC27 74AC245SJ
BUFFER IC28 74AC245SJ
BKDW-507
DPR36P/36PG MCB
DPR-36 MCB
IC30 IDT71V124S15Y-TL
IC31 IDT71V124S15Y-TL
A/C DATA DE-INTERLEAVING MEMORY
SYS RST IN
SYS RST
5F INERTIA
SYSHL1
PPCK DEX
13.5MCK DE1
REC DATA BYPASS
18MCK
REC CK2
PSTB 3
ADV BD SEL
CNF BD SEL
REC BD SEL
ADV AC SEL
CNF AC SEL
REC AC SEL
METRIC ADV AC
METRIC ADV BD
METRIC CNF AC
METRIC CNF BD
MODE PR
PPLAY

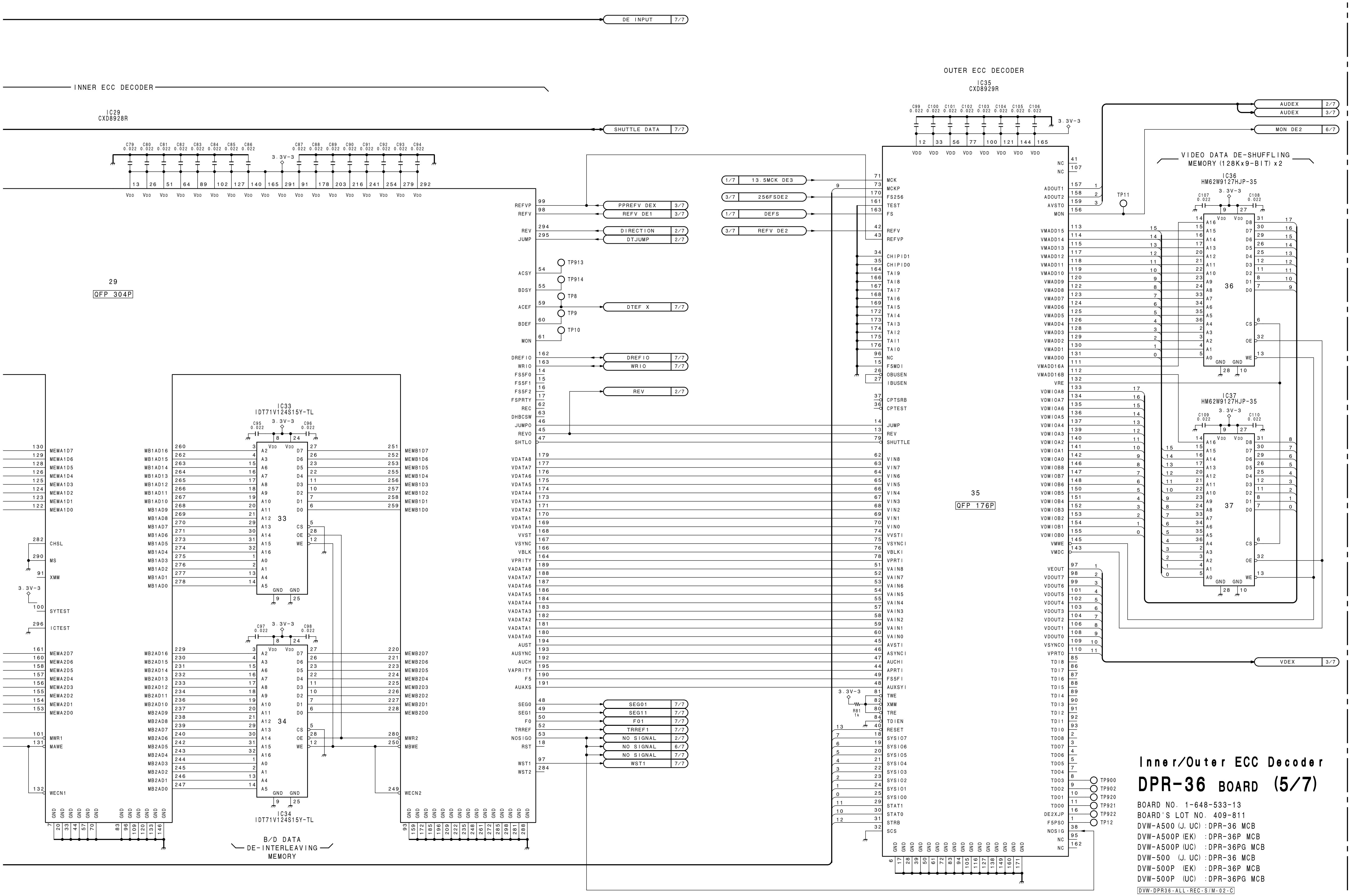
INNER ECC DECODER
IC29
CXD8928R
29
QFP 304P
OUTER ECC DECODER
IC35
CXD8929R
35
QFP 176P
VIDEO DATA DE-SHUFFLING
MEMORY (128Kx9-BIT) x2
IC36
HM62W9127HJP-35
IC37
HM62W9127HJP-35
IC33
IDT71V124S15Y-TL
IC34
IDT71V124S15Y-TL
B/D DATA
DE-INTERLEAVING
MEMORY
Inner/Outer ECC Decoder
DPR-36 BOARD (5/7)
BOARD NO. 1-648-533-13
BOARD'S LOT NO. 409-811
DVW-A500 (J, UC) : DPR-36 MCB
DVW-A500P (EK) : DPR-36P MCB
DVW-A500P (UC) : DPR-36PG MCB
DVW-500 (J, UC) : DPR-36 MCB
DVW-500P (EK) : DPR-36P MCB
DVW-500P (UC) : DPR-36PG MCB
DVW-DPR36-ALL-REC-S/M-02-C

1
2
3
4
5

http://getMANUAL.com

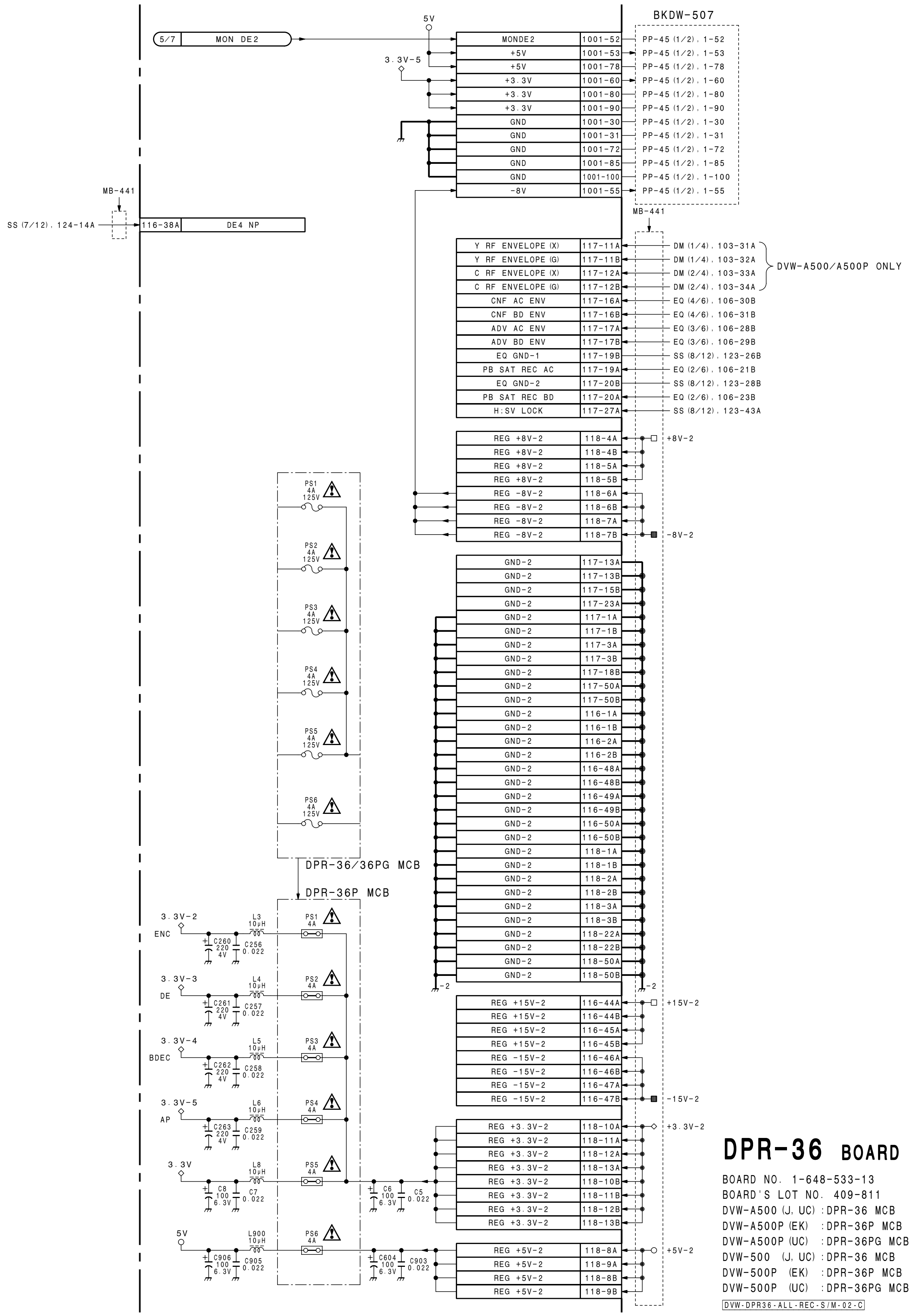

DPR-36 BOARD (6/7)

BOARD NO. 1-648-533-13
BOARD'S LOT NO. 409-811
DVW-A500 (J, UC) : DPR-36 MCB
DVW-A500P (EK) : DPR-36P MCB
DVW-A500P (UC) : DPR-36PG MCB
DVW-500 (J, UC) : DPR-36 MCB
DVW-500P (EK) : DPR-36P MCB
DVW-500P (UC) : DPR-36PG MCB

DVW-DPR36-ALL-REC-S/M-02-C

DPR-36 (7/7)

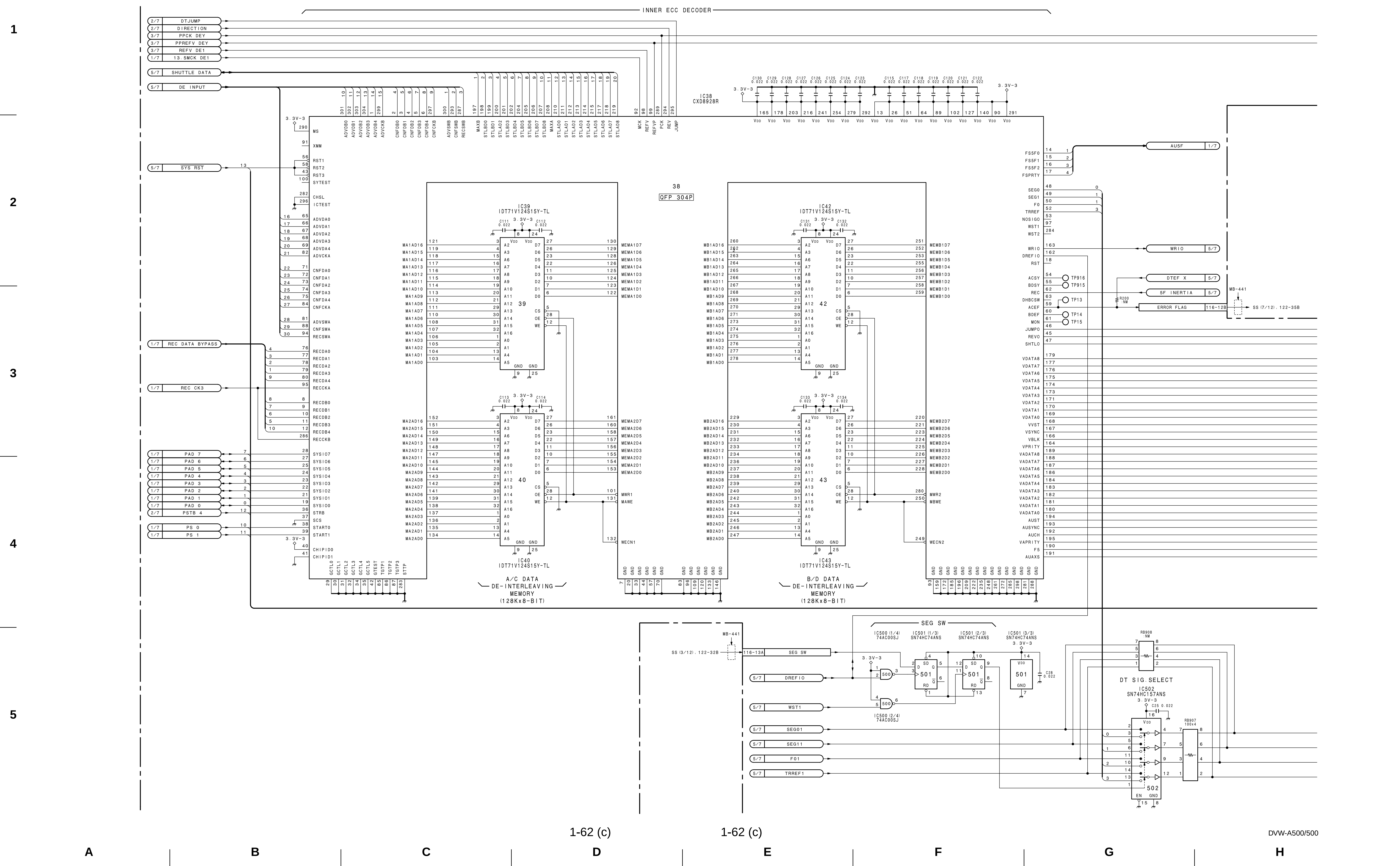

1-62 (c)

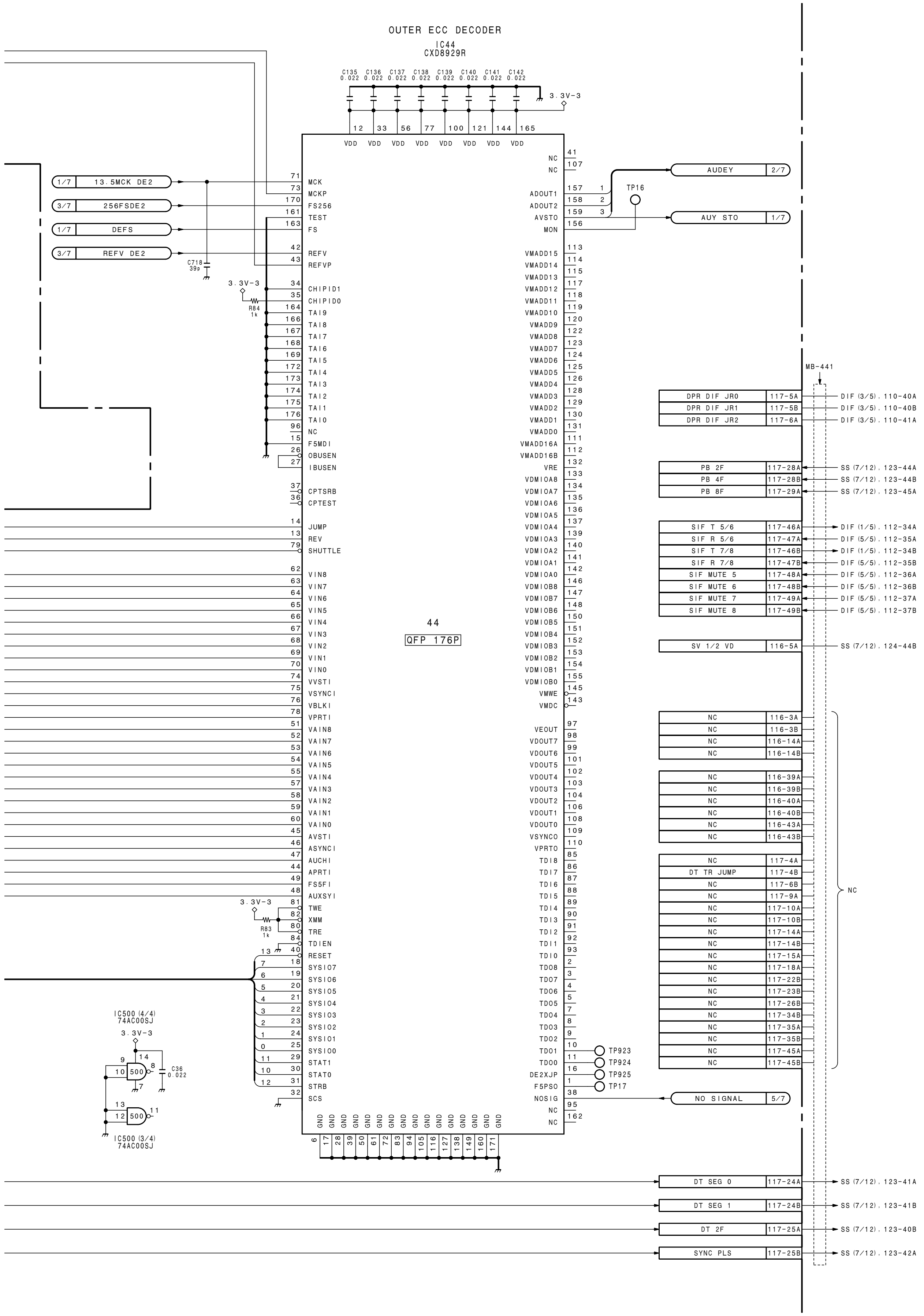

Inner/Outer ECC Decoder
DPR-36 BOARD (7/7)

BOARD NO. 1-648-533-13
BOARD'S LOT NO. 409-811
DVW-A500 (J, UC) : DPR-36 MCB
DVW-A500P (EK) : DPR-36P MCB
DVW-A500P (UC) : DPR-36PG MCB
DVW-500 (J, UC) : DPR-36 MCB
DVW-500P (EK) : DPR-36P MCB
DVW-500P (UC) : DPR-36PG MCB
DVW-DPR36-ALL-REC-S/M-02-C

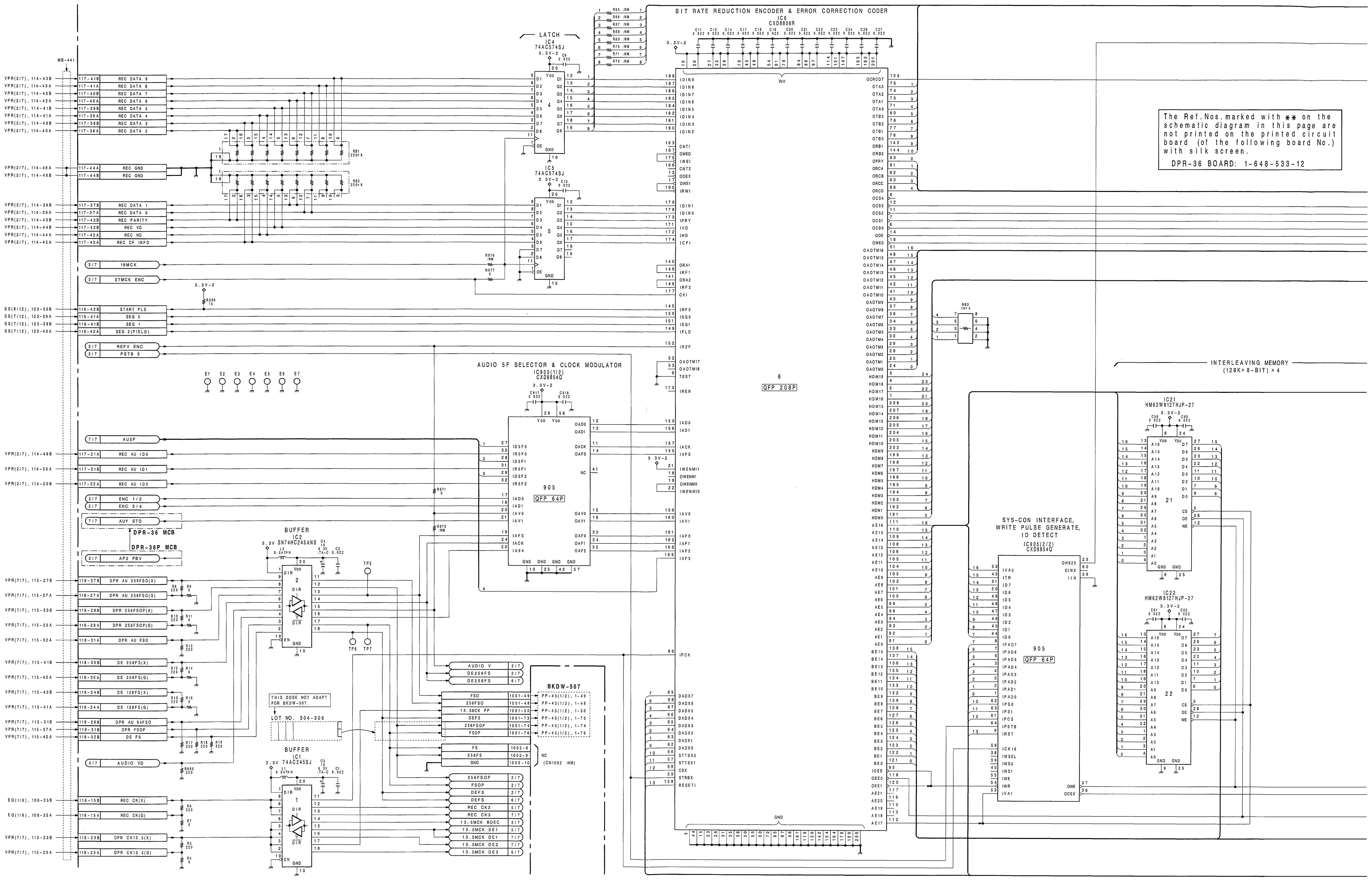
BIT RATE REDUCTION ENCODER & ERROR CORRECTION CODER
IC6
CXD8806R
LATCH
IC4
74AC574SJ
IC5
74AC574SJ
The Ref.Nos.marked with ✱✱ on the schematic diagram in this page are not printed on the printed circuit board (of the following board No.) with silk screen.
DPR-36 BOARD: 1-648-533-12
QFP 208P
AUDIO 5F SELECTOR & CLOCK MODULATOR
IC905(1/2)
CXD8854Q
QFP 64P
BUFFER
IC2
SN74HC245ANS
BUFFER
IC1
74AC245SJ
DPR-36 MCB
DPR-36P MCB
BKDW-507
THIS DOSE NOT ADAPT FOR BKDW-507.
LOT NO. 304-306
SYS-CON INTERFACE,
WRITE PULSE GENERATE,
ID DETECT
IC905(2/2)
CXD8854Q
INTERLEAVING MEMORY
(128K×8-BIT)×4
IC21
HM62W8127HJP-27
IC22
HM62W8127HJP-27
REC DATA 9
REC DATA 8
REC DATA 7
REC DATA 6
REC DATA 5
REC DATA 4
REC DATA 3
REC DATA 2
REC GND
REC GND
REC DATA 1
REC DATA 0
REC PARITY
REC VD
REC HD
REC CF INFO
18MCK
27MCK ENC
START PLS
SEG 0
SEG 1
SEG 2(FIELD)
REFV ENC
PSTB 5
AU5F
REC AU ID0
REC AU ID1
REC AU ID2
ENC 1/2
ENC 3/4
AUY STO
AP2 PBV
DPR AU 256FSO(X)
DPR AU 256FSO(G)
DPR 256FSOP(X)
DPR 256FSOP(G)
DPR AU FSO
DE 256FS(X)
DE 256FS(G)
DE 128FS(X)
DE 128FS(G)
DPR AU 64FSO
DPR FSOP
DE FS
AUDIO VD
REC CK(X)
REC CK(G)
DPR CK13.5(X)
DPR CK13.5(G)

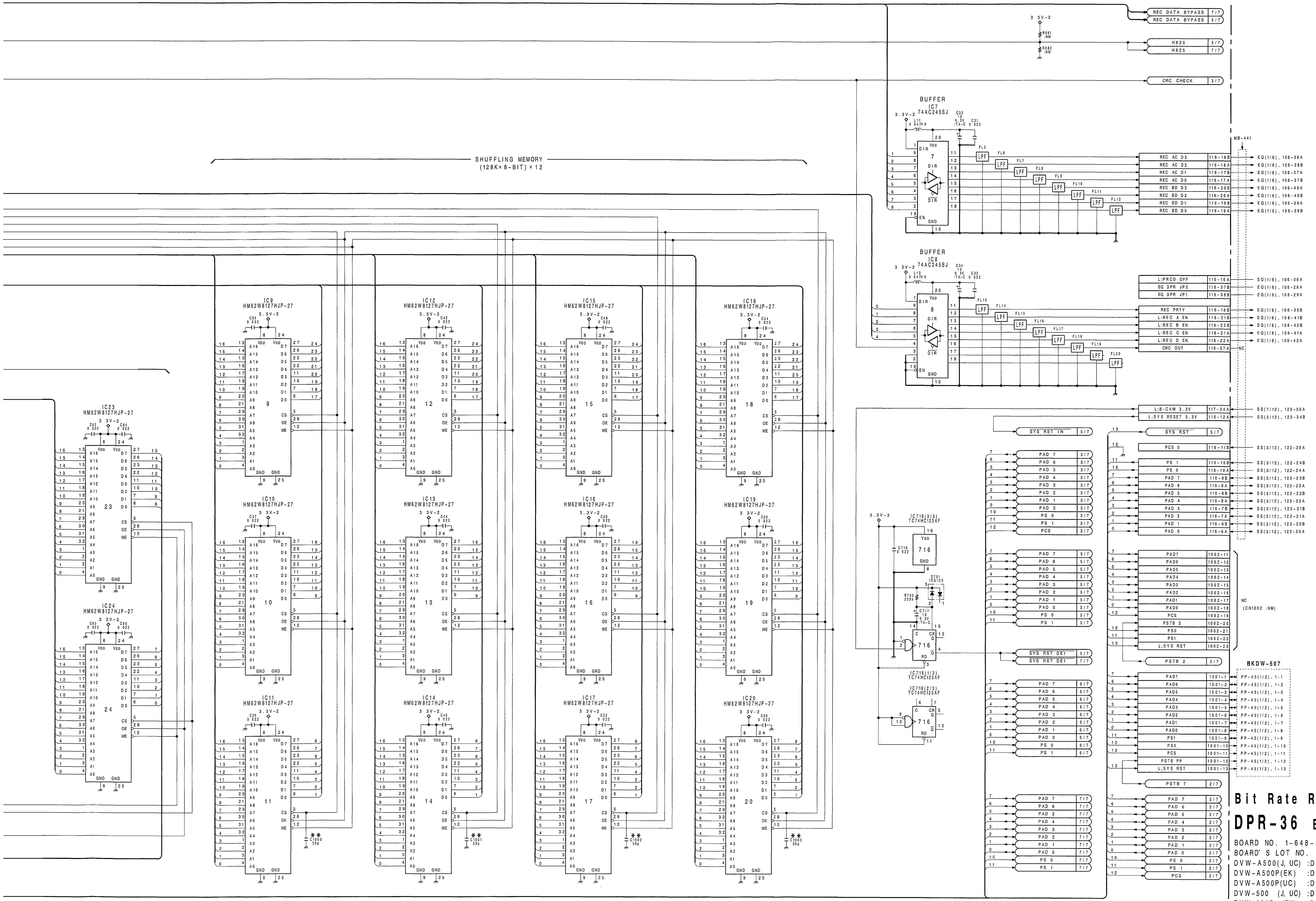

Bit Rate Reduction Encoder

DPR-36 BOARD (1/7)

BOARD NO. 1-648-533-12
BOARD' S LOT NO. 304-409
DVW-A500(J, UC) :DPR-36 MCB
DVW-A500P(EK) :DPR-36P MCB
DVW-A500P(UC) :DPR-36PG MCB
DVW-500 (J, UC) :DPR-36 MCB
DVW-500P (EK) :DPR-36P MCB
DVW-500P (UC) :DPR-36PG MCB
DVW-DPR36-ALL-REC-S/M-02-B

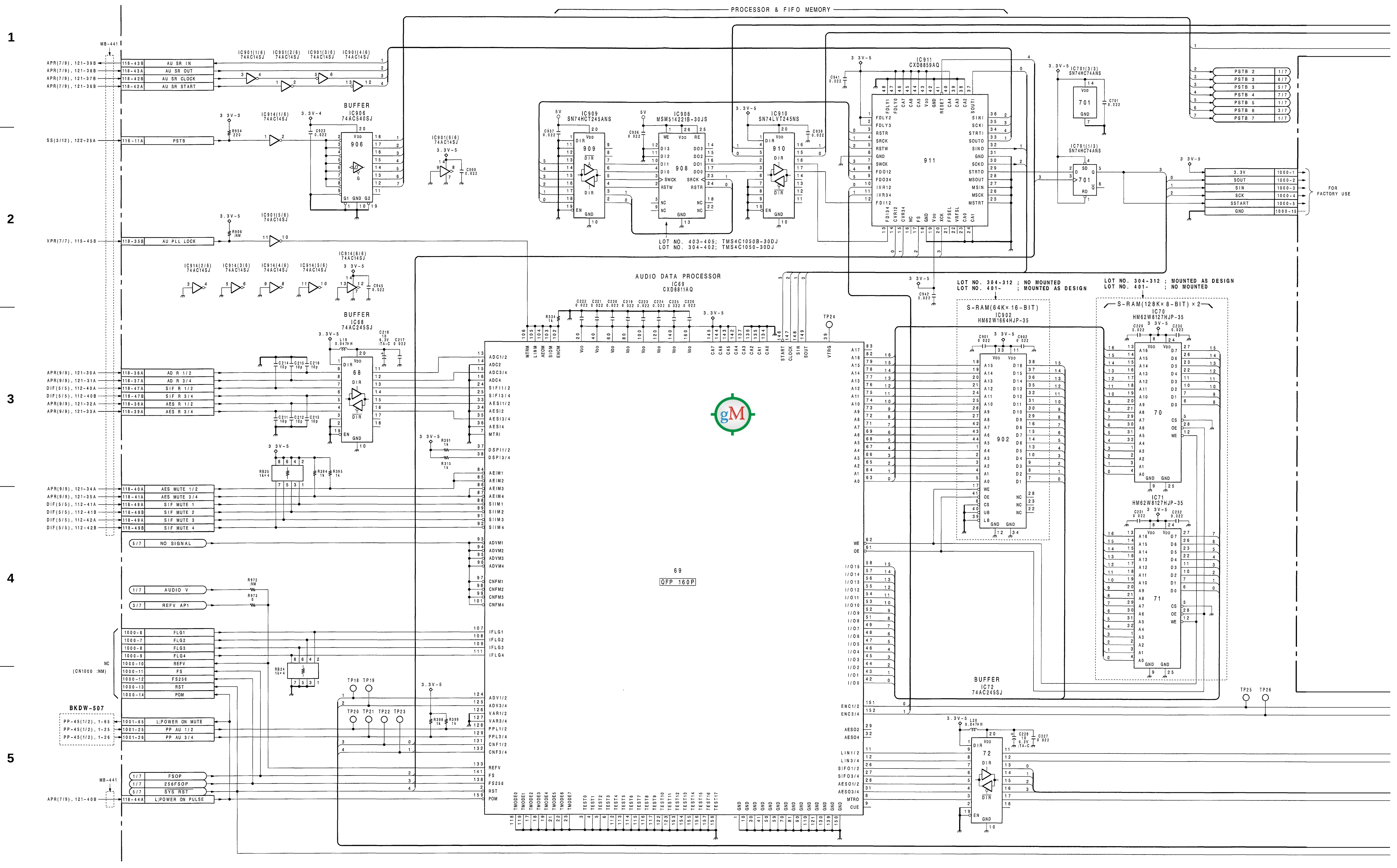
PROCESSOR & FIFO MEMORY
AUDIO DATA PROCESSOR
IC69
CXD8811AQ
IC911
CXD8859AQ
IC906
74AC540SJ
BUFFER
IC68
74AC245SJ
IC909
SN74HCT245ANS
IC908
MSM514221B-30JS
IC910
SN74LVT245NS
S-RAM(64K×16-BIT)
IC902
HM62W1664HJP-35
S-RAM(128K×8-BIT)×2
IC70
HM62W8127HJP-35
IC71
HM62W8127HJP-35
IC72
74AC245SJ
LOT NO. 403-405; TMS4C1050B-30DJ
LOT NO. 304-402; TMS4C1050-30DJ
LOT NO. 304-312 ; NO MOUNTED
LOT NO. 401- ; MOUNTED AS DESIGN
LOT NO. 304-312 ; MOUNTED AS DESIGN
LOT NO. 401- ; NO MOUNTED
FOR FACTORY USE
BKDW-507
MB-441
QFP 160P

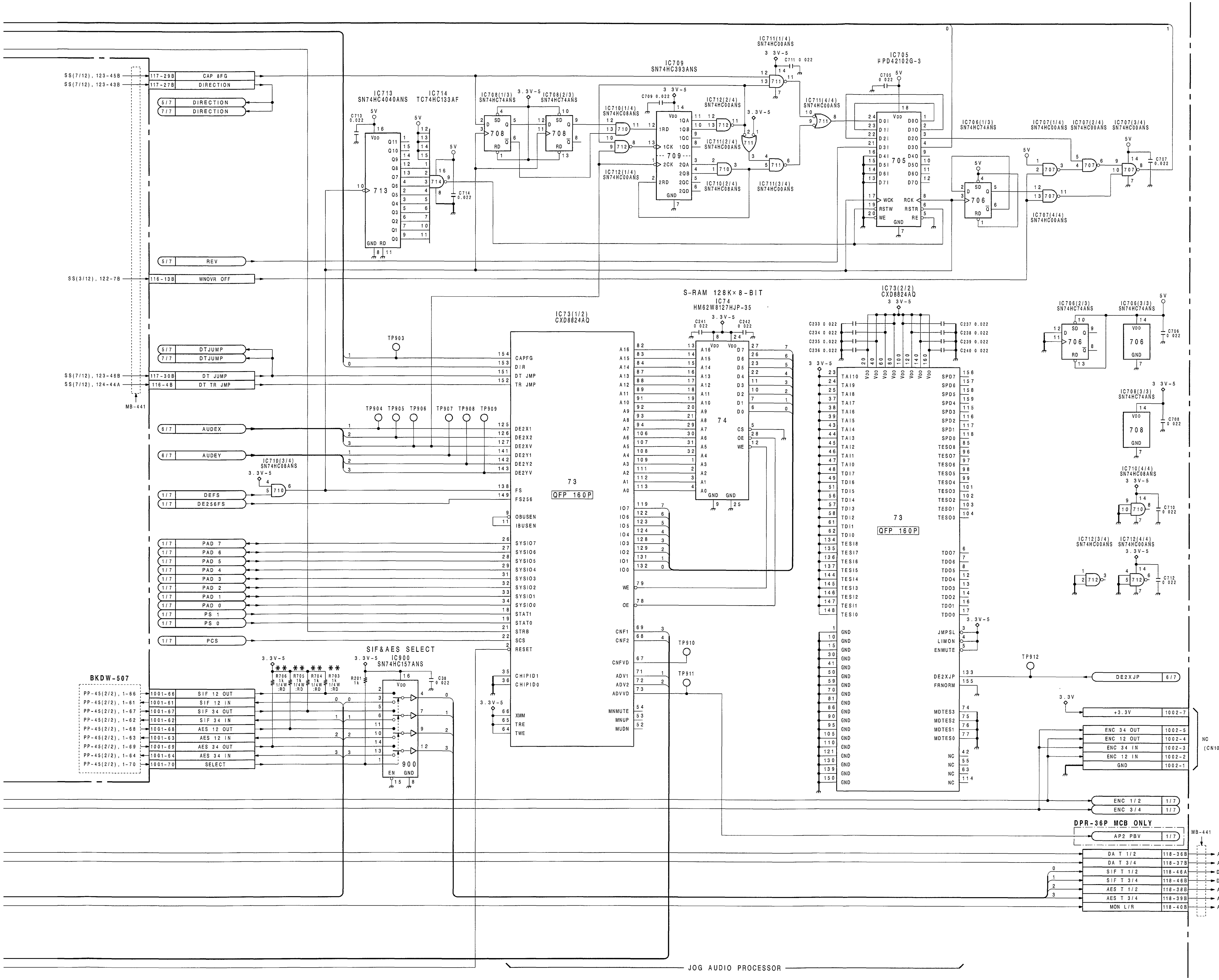

The Ref.Nos.marked with ** on the schematic diagram in this page are not printed on the printed circuit board (of the following board No.) with silk screen.
DPR-36 BOARD: 1-648-533-12

Audio Data Processor, Jog Audio Data Processor

DPR-36 BOARD (2/7)

BOARD NO. 1-648-533-12
BOARD' S LOT NO. 304-409
DVW-A500(J, UC) :DPR-36 MCB
DVW-A500P(EK) :DPR-36P MCB
DVW-A500P(UC) :DPR-36PG MCB
DVW-500 (J, UC) :DPR-36 MCB
DVW-500P (EK) :DPR-36P MCB
DVW-500P (UC) :DPR-36PG MCB

DVW-DPR36-ALL-REC-SIM-02-B

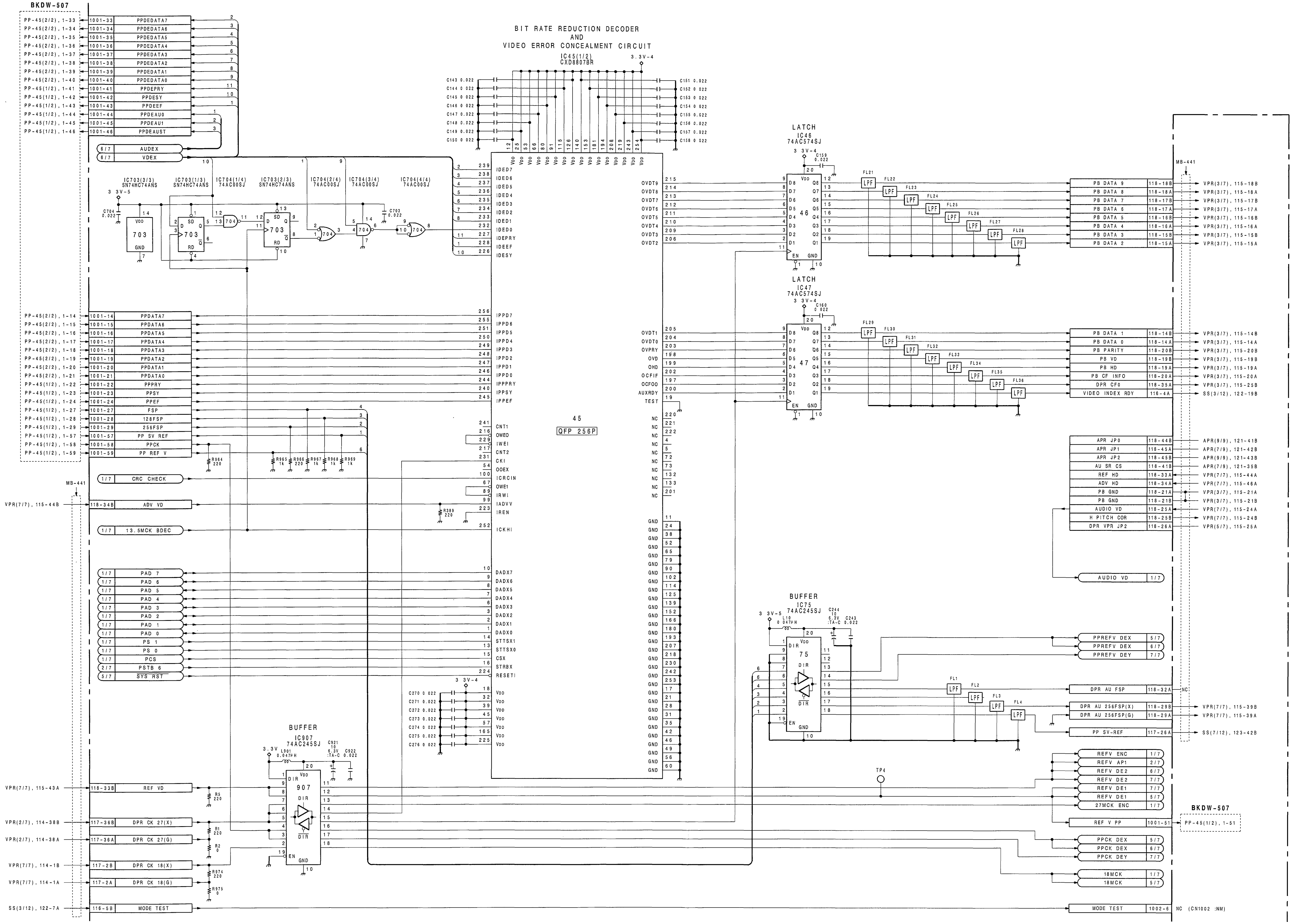
BKDW-507
BIT RATE REDUCTION DECODER
AND
VIDEO ERROR CONCEALMENT CIRCUIT
IC45(1/2)
CXD8807BR
45
QFP 256P
LATCH
IC46
74AC574SJ
LATCH
IC47
74AC574SJ
BUFFER
IC75
74AC245SJ
BUFFER
IC907
74AC245SJ
MB-441
TP4
BKDW-507

 DPR-36 (3/7)

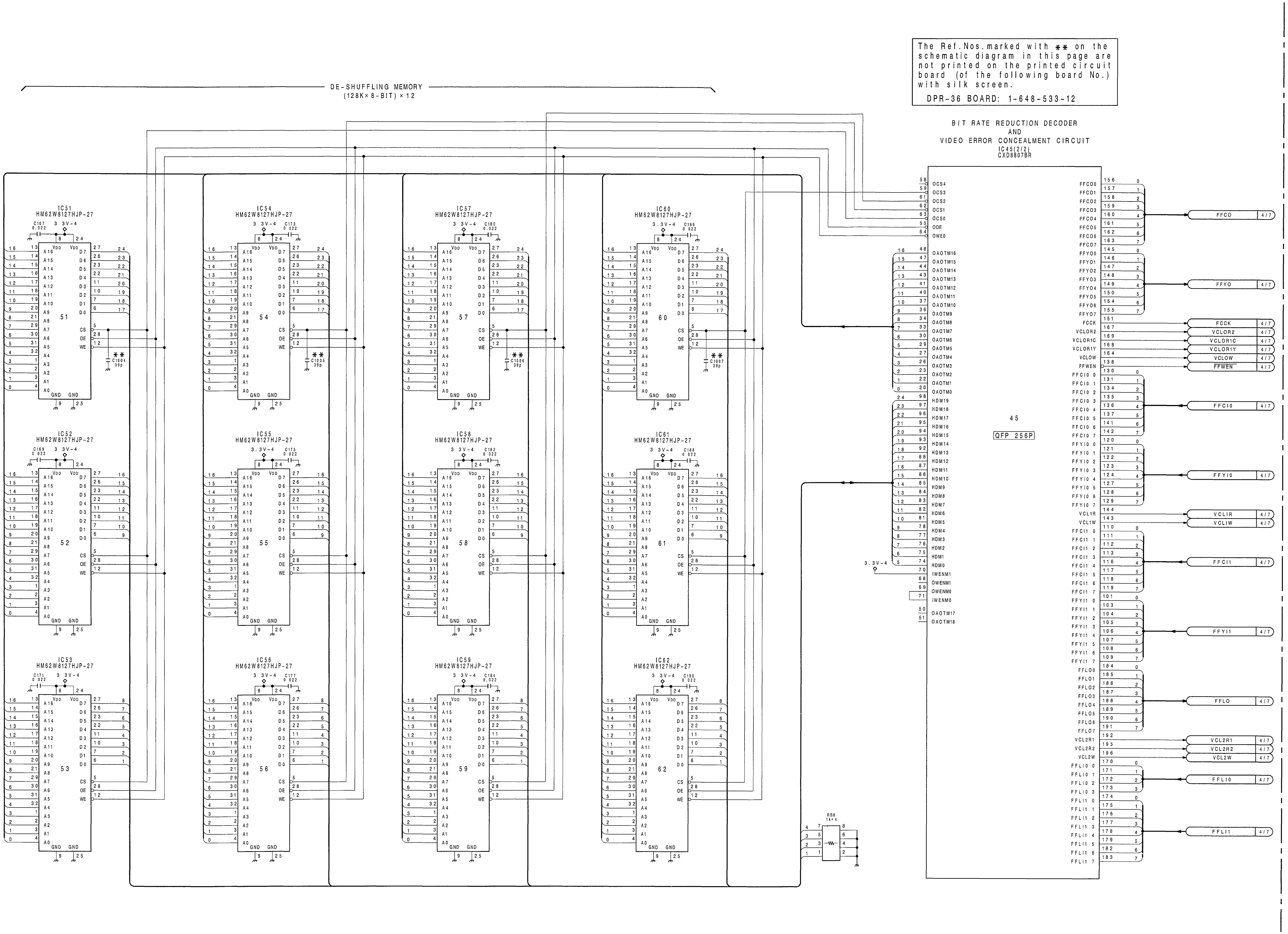

1
2
3
4
5

BIT Rate Reduction Decoder, Concealment Circuit

DPR-36 BOARD (3/7)

BOARD NO. 1-648-533-12
BOARD' S LOT NO. 304-409
DVW-A500(J, UC) :DPR-36 MCB
DVW-A500P(EK) :DPR-36P MCB
DVW-A500P(UC) :DPR-36PG MCB
DVW-500 (J, UC) :DPR-36 MCB
DVW-500P (EK) :DPR-36P MCB
DVW-500P (UC) :DPR-36PG MCB

DVW-DPR36-ALL-REC-S/M-02-B

 1-55 (b)

I J K L M N O P

 DPR-36 (4/7)

1 2 3 4 5

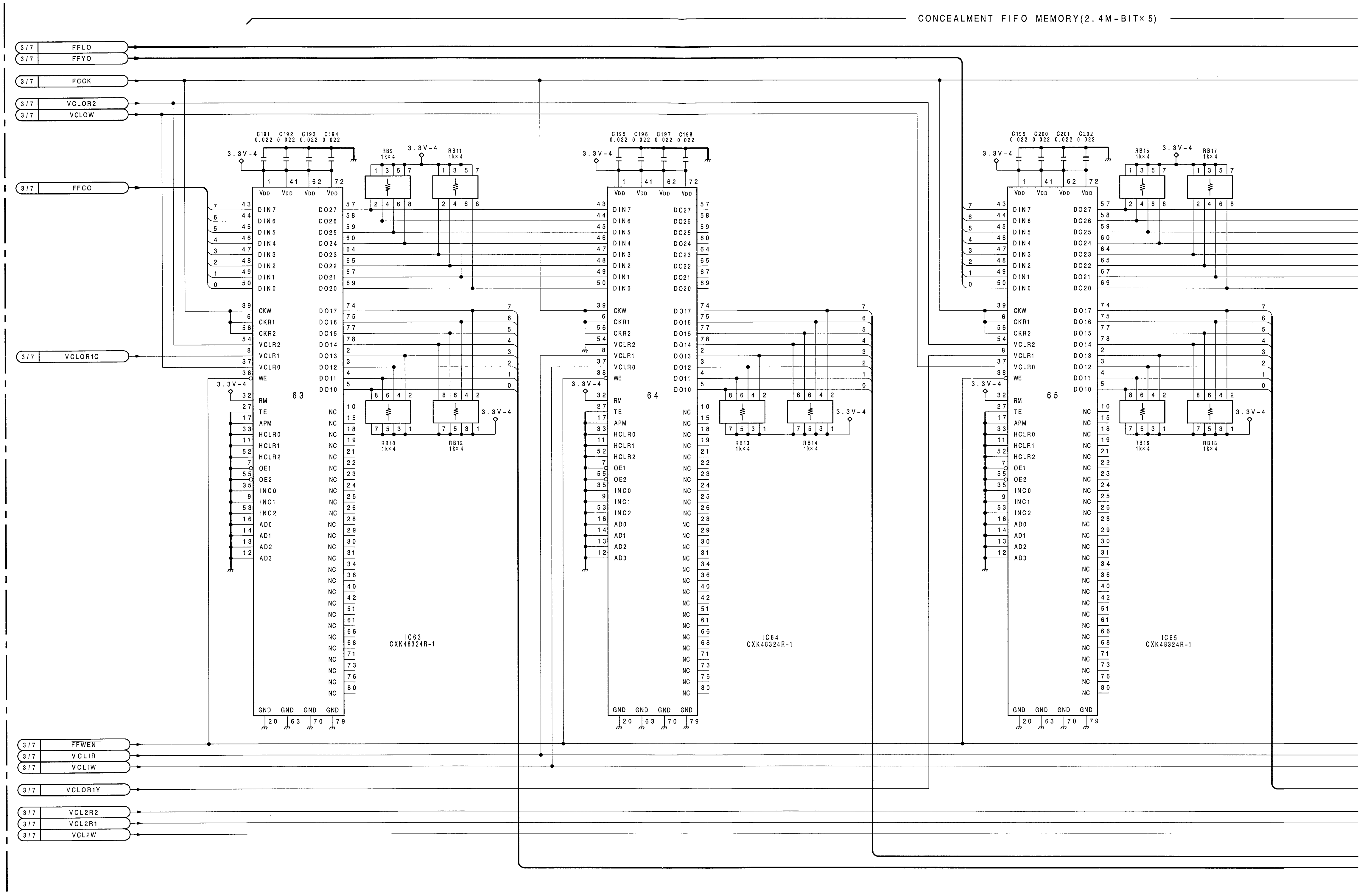

 1-56 (b)

A B C D E F G H

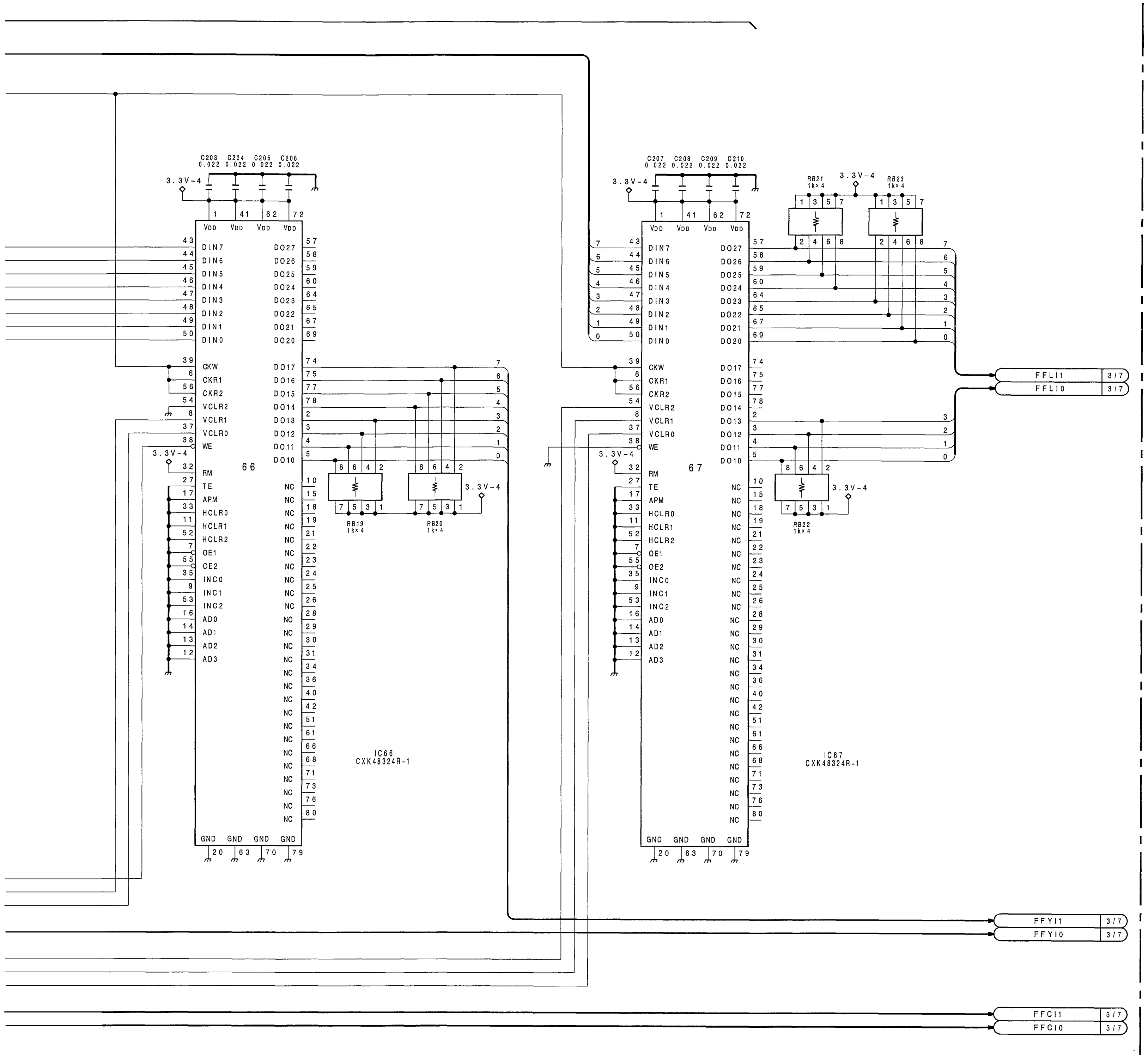

Concealment FIFO Memory

DPR-36 BOARD (4/7)

BOARD NO. 1-648-533-12
BOARD'S LOT NO. 304-409
DVW-A500(J, UC) :DPR-36 MCB
DVW-A500P(EK) :DPR-36P MCB
DVW-A500P(UC) :DPR-36PG MCB
DVW-500 (J, UC) :DPR-36 MCB
DVW-500P (EK) :DPR-36P MCB
DVW-500P (UC) :DPR-36PG MCB

DVW-DPR36-ALL-REC-S/M-02-B

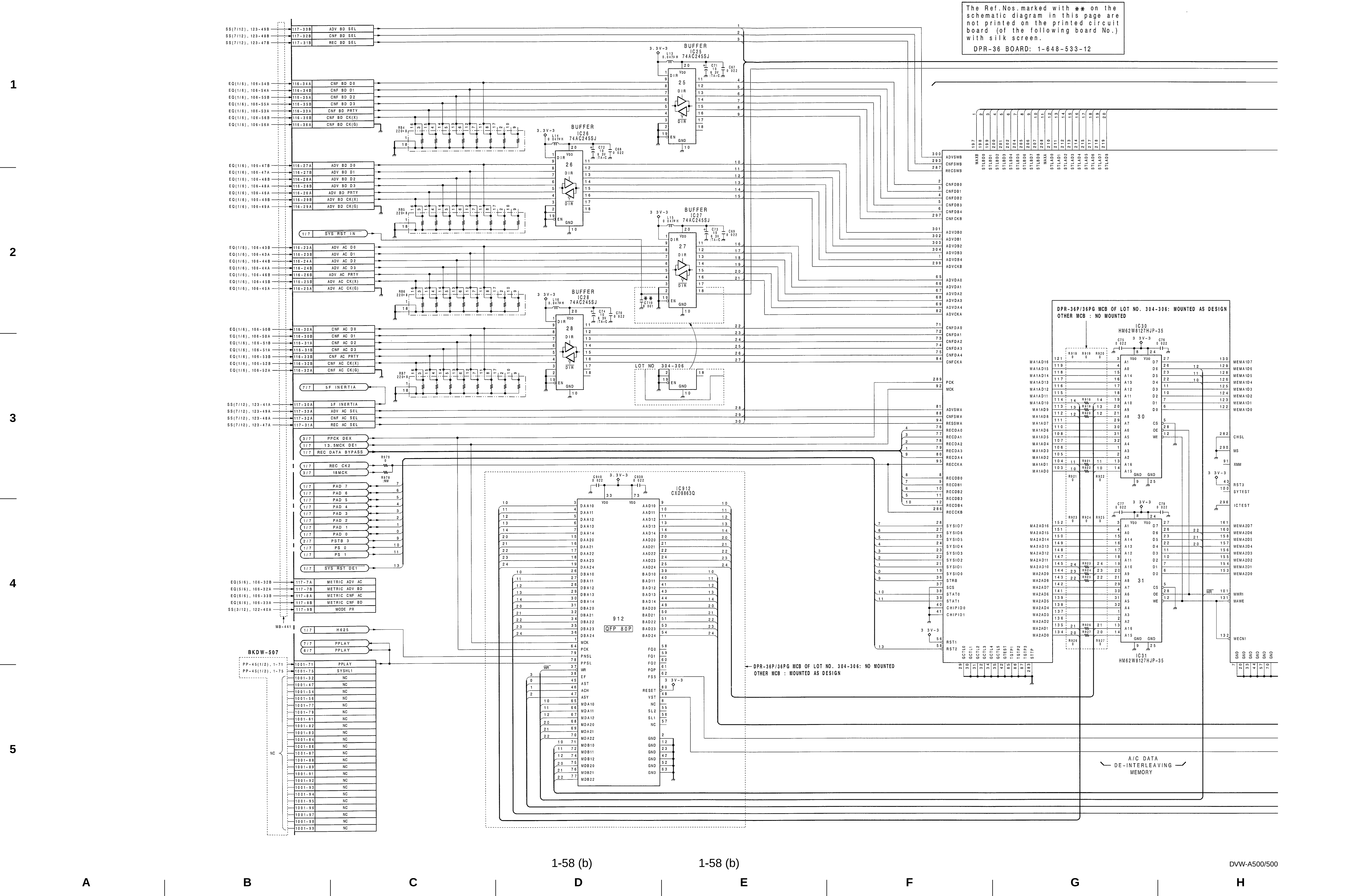
The Ref.Nos.marked with ** on the schematic diagram in this page are not printed on the printed circuit board (of the following board No.) with silk screen.
DPR-36 BOARD: 1-648-533-12
BUFFER IC25 74AC245SJ
BUFFER IC26 74AC245SJ
BUFFER IC27 74AC245SJ
BUFFER IC28 74AC245SJ
IC912 CXD8863Q
DPR-36P/36PG MCB OF LOT NO. 304-306: MOUNTED AS DESIGN
OTHER MCB : NO MOUNTED
IC30 HM62W8127HJP-35
IC31 HM62W8127HJP-35
DPR-36P/36PG MCB OF LOT NO. 304-306: NO MOUNTED
OTHER MCB : MOUNTED AS DESIGN
LOT NO 304-306
BKDW-507
MB-441
A/C DATA DE-INTERLEAVING MEMORY

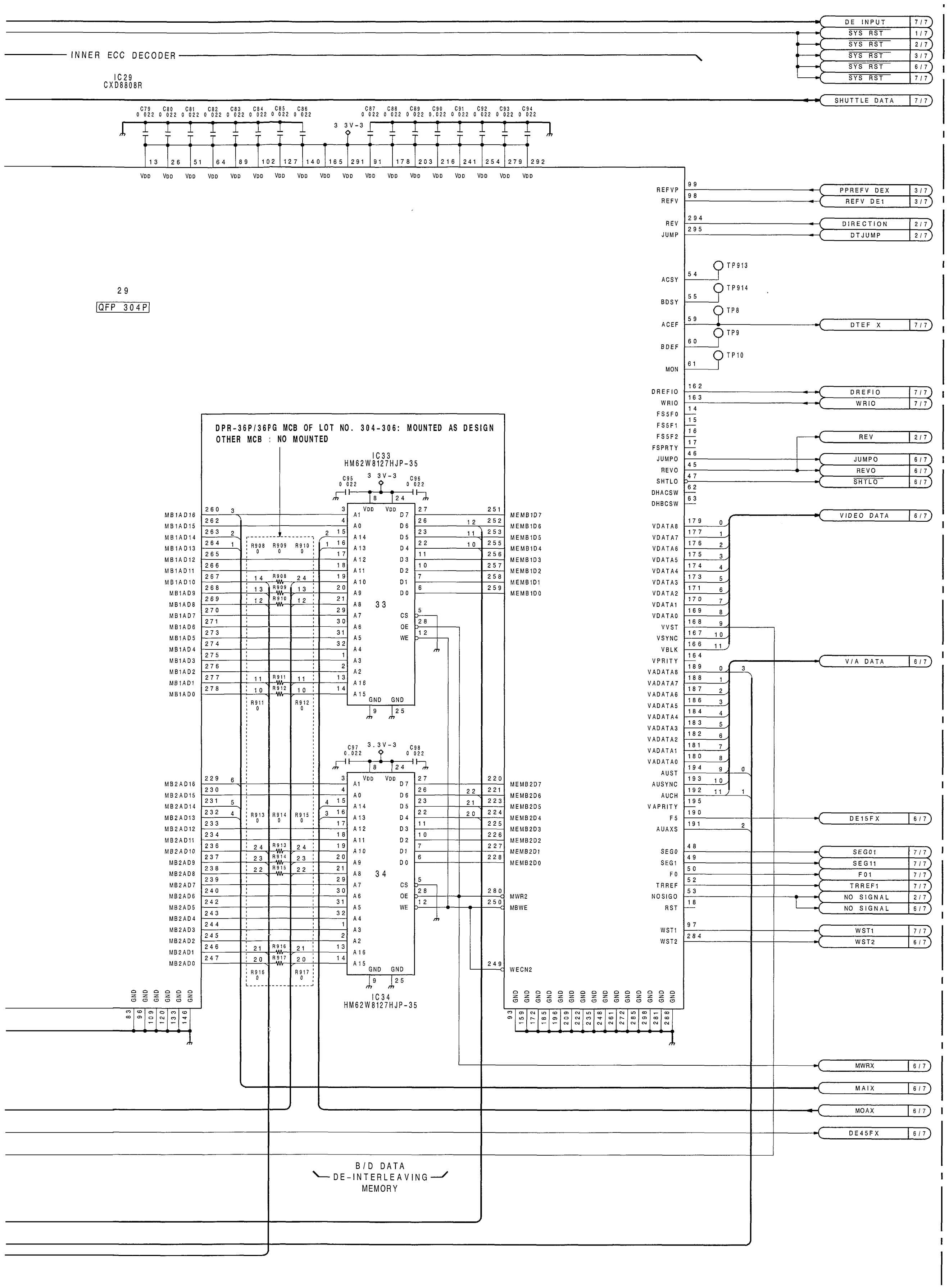

Inner ECC Decoder

DPR-36 BOARD (5/7)

BOARD NO. 1-648-533-12
BOARD' S LOT NO. 304-409
DVW-A500(J, UC) :DPR-36 MCB
DVW-A500P(EK) :DPR-36P MCB
DVW-A500P(UC) :DPR-36PG MCB
DVW-500 (J, UC) :DPR-36 MCB
DVW-500P (EK) :DPR-36P MCB
DVW-500P (UC) :DPR-36PG MCB

DVW-DPR36-ALL-REC-SIM-02-B

1-55(b)

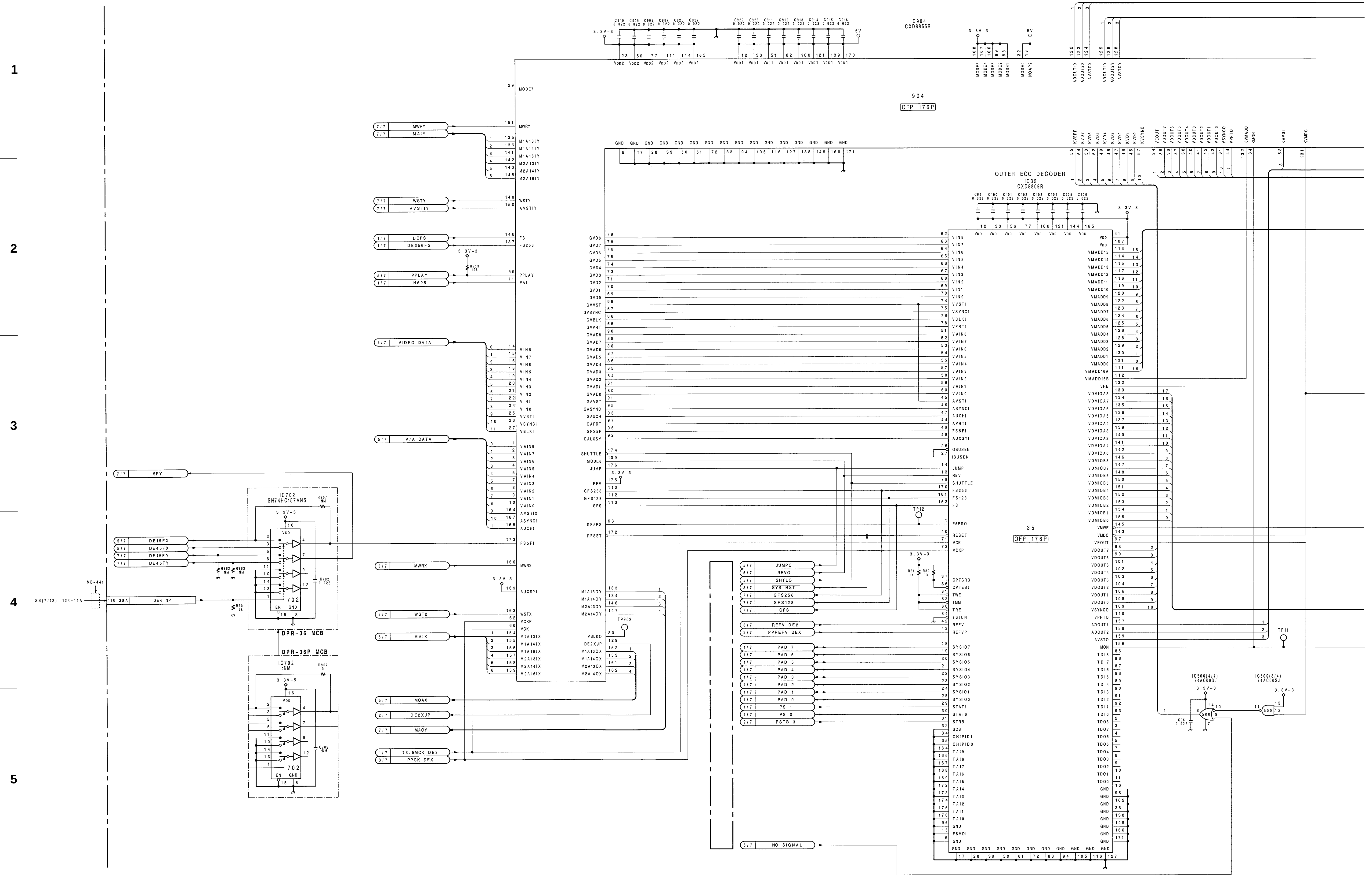
1
2
3
4
5
IC904
CXD8855R
904
QFP 176P
OUTER ECC DECODER
IC35
CXD8809R
35
QFP 176P
IC702
SN74HC157ANS
702
DPR-36 MCB
DPR-36P MCB
IC702
:NM
IC500(4/4)
74AC00SJ
IC500(3/4)
74AC00SJ
TP902
TP12
TP11
MB-441
SS(7/12), 124-14A
MWRY
MAIY
WSTY
AVSTIY
DEFS
DE256FS
PPLAY
H625
VIDEO DATA
V/A DATA
5FY
DE15FX
DE45FX
DE15FY
DE45FY
DE4 NP
MWRX
WST2
MAIX
MOAX
DE2XJP
MAOY
13.5MCK DE3
PPCK DEX
JUMPO
REVO
SHTLO
SYS RST
GFS256
GFS128
GFS
REFV DE2
PPREFV DEX
PAD 7
PAD 6
PAD 5
PAD 4
PAD 3
PAD 2
PAD 1
PAD 0
PS 1
PS 0
PSTB 3
NO SIGNAL

DPR-36 (6/7)

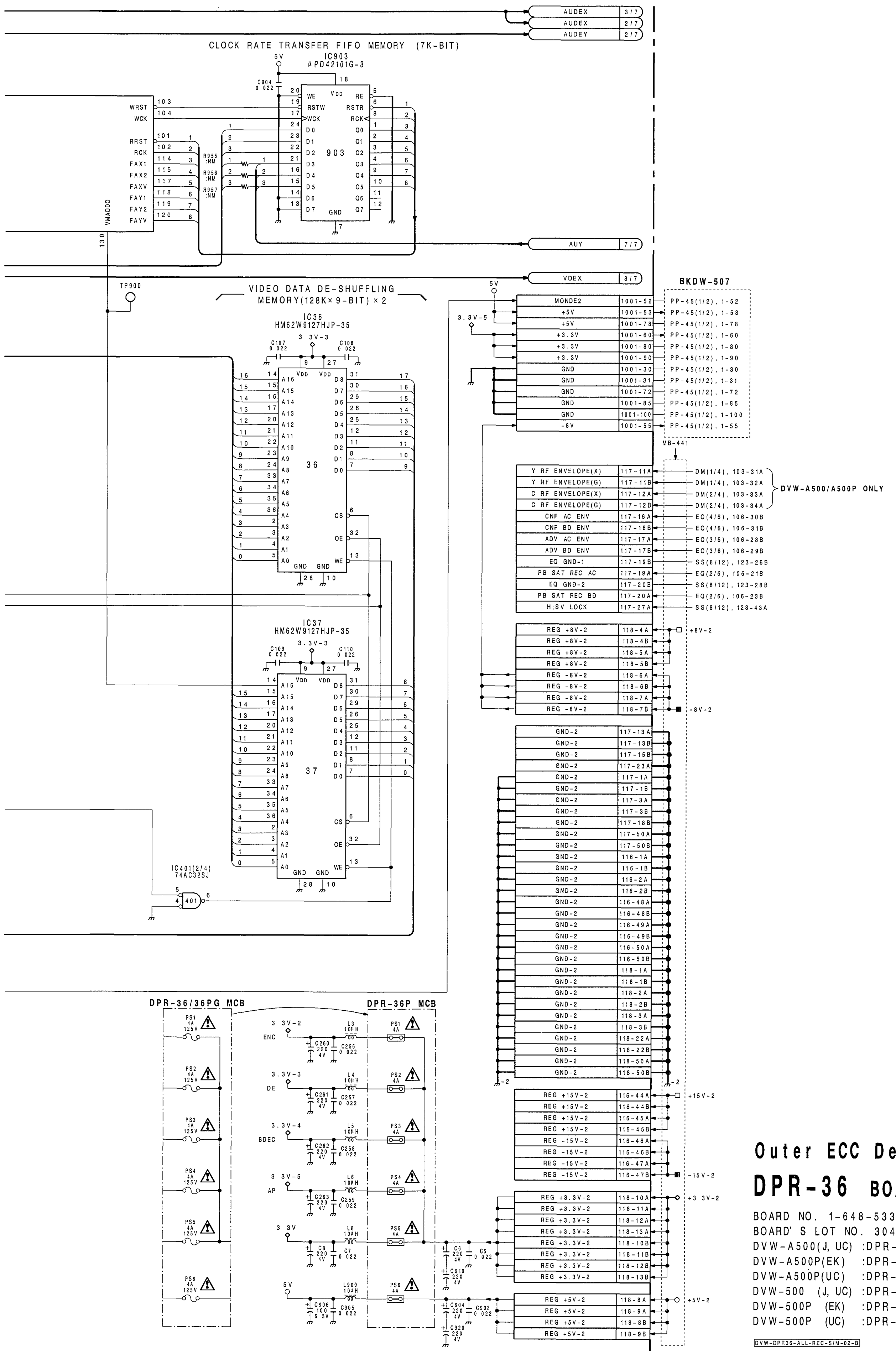

Outer ECC Decoder

DPR-36 BOARD (6/7)

BOARD NO. 1-648-533-12
BOARD' S LOT NO. 304-409
DVW-A500(J, UC) :DPR-36 MCB
DVW-A500P(EK) :DPR-36P MCB
DVW-A500P(UC) :DPR-36PG MCB
DVW-500 (J, UC) :DPR-36 MCB
DVW-500P (EK) :DPR-36P MCB
DVW-500P (UC) :DPR-36PG MCB

DVW-DPR36-ALL-REC-5/M-02-B

1-61 (b)

DPR-36 (7/7)

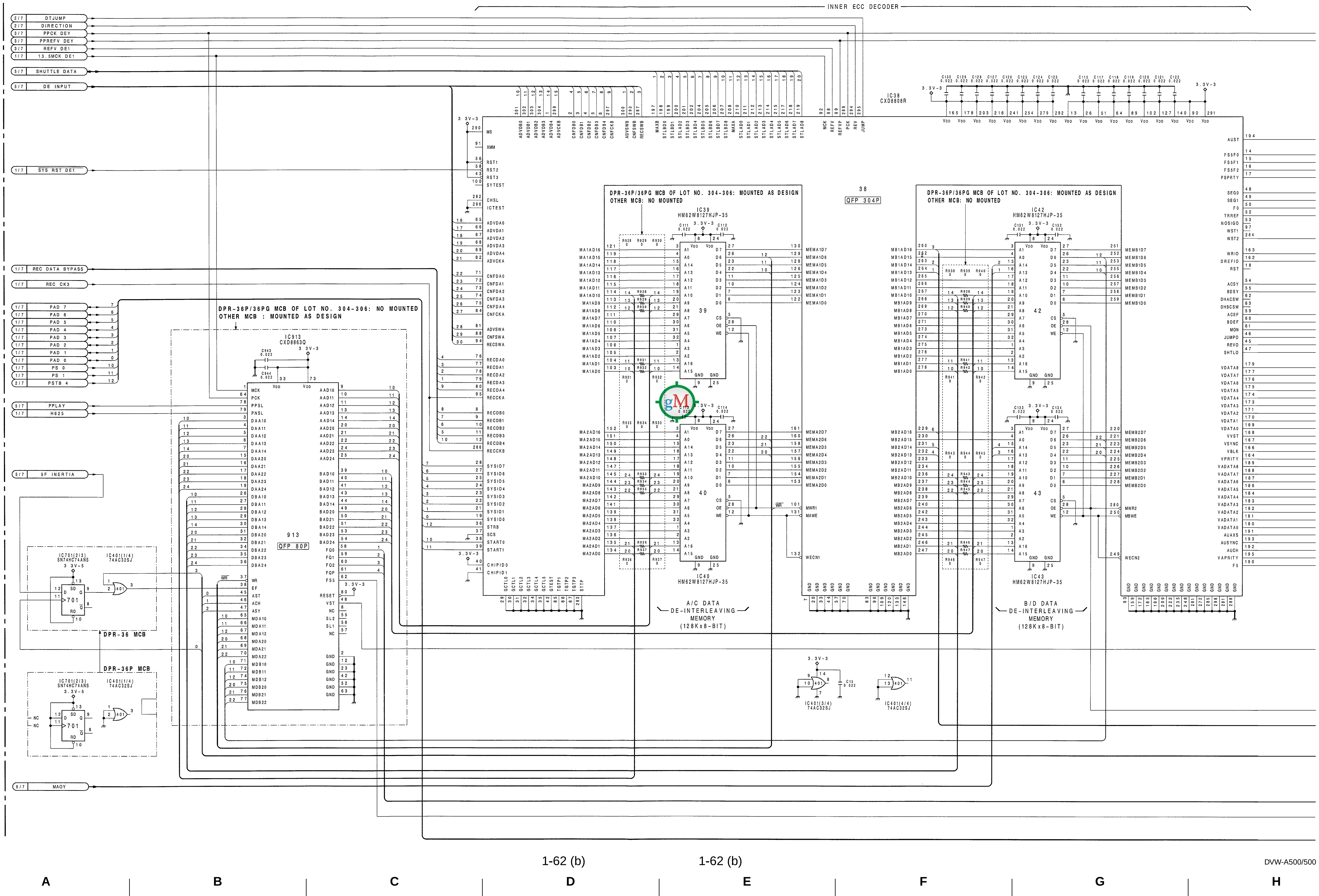

1-62 (b)

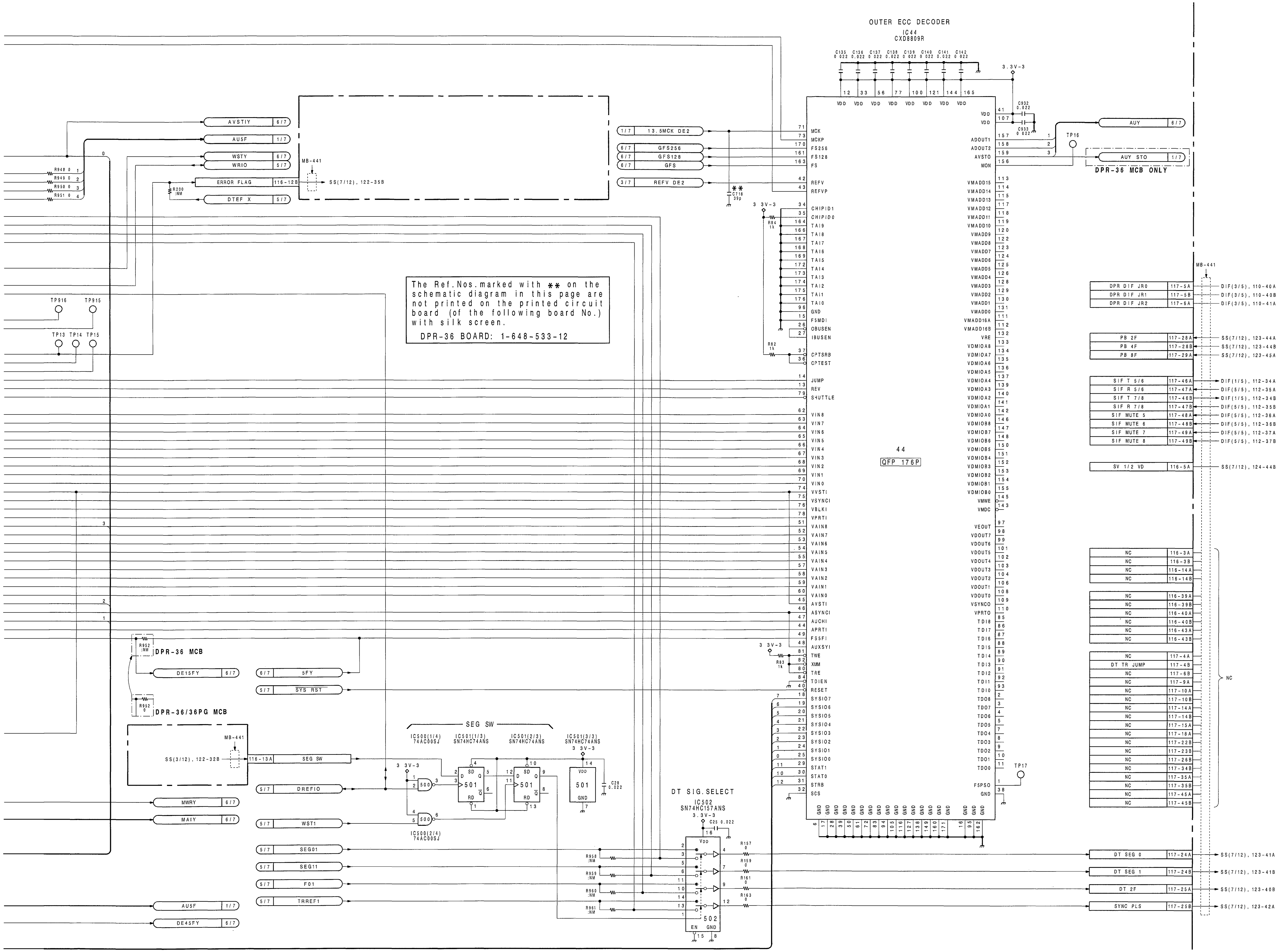

Inner/Outer ECC Decoder

DPR-36 BOARD (7/7)

BOARD NO. 1-648-533-12
BOARD' S LOT NO. 304-409
DVW-A500(J, UC) :DPR-36 MCB
DVW-A500P(EK) :DPR-36P MCB
DVW-A500P(UC) :DPR-36PG MCB
DVW-500 (J, UC) :DPR-36 MCB
DVW-500P (EK) :DPR-36P MCB
DVW-500P (UC) :DPR-36PG MCB

DVW-DPR36-ALL-REC-SIM-02-B

DPR-36 (1/7)

1
2
3
4
5

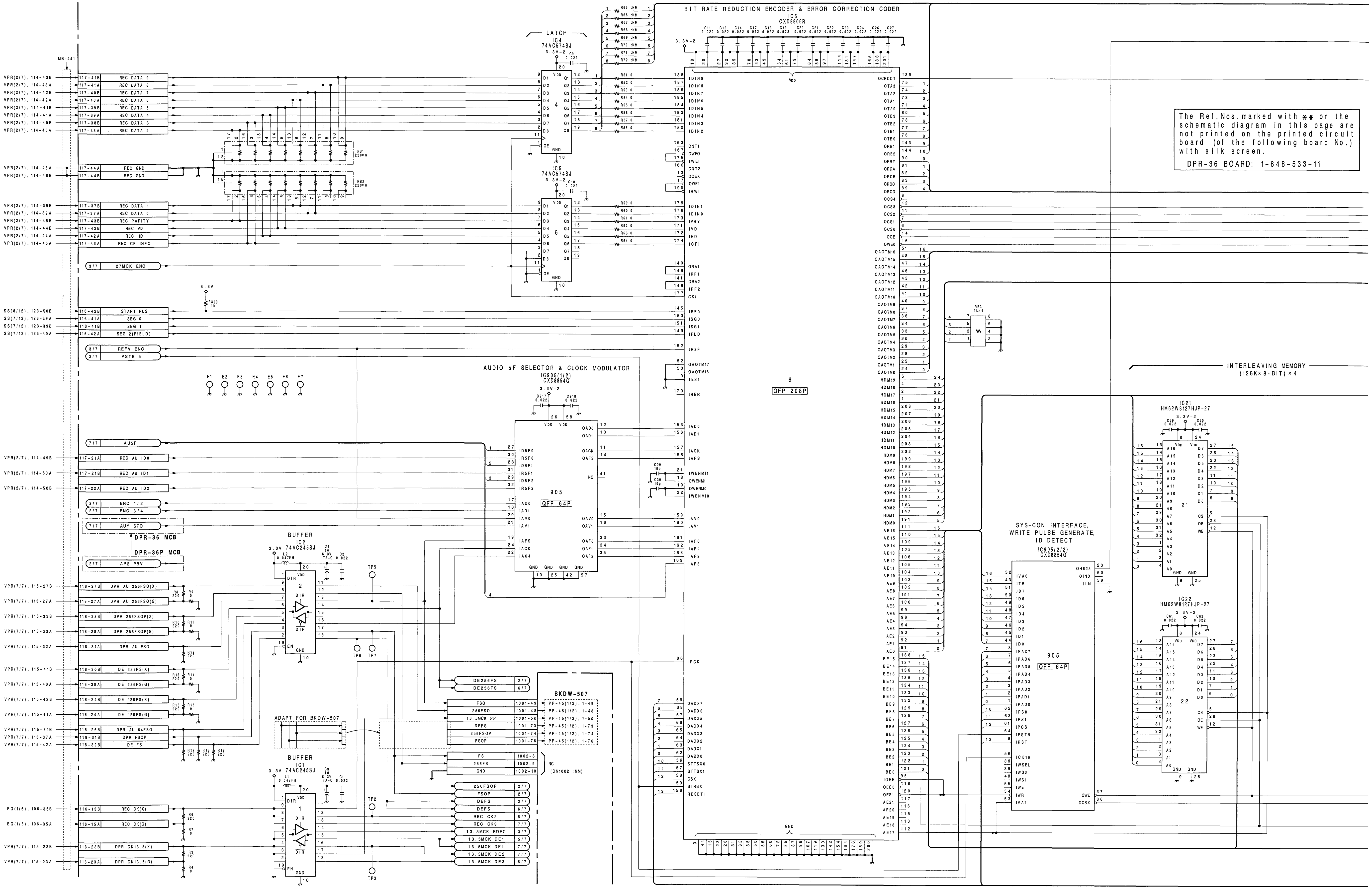

1-50 (a)

A B C D E F G H

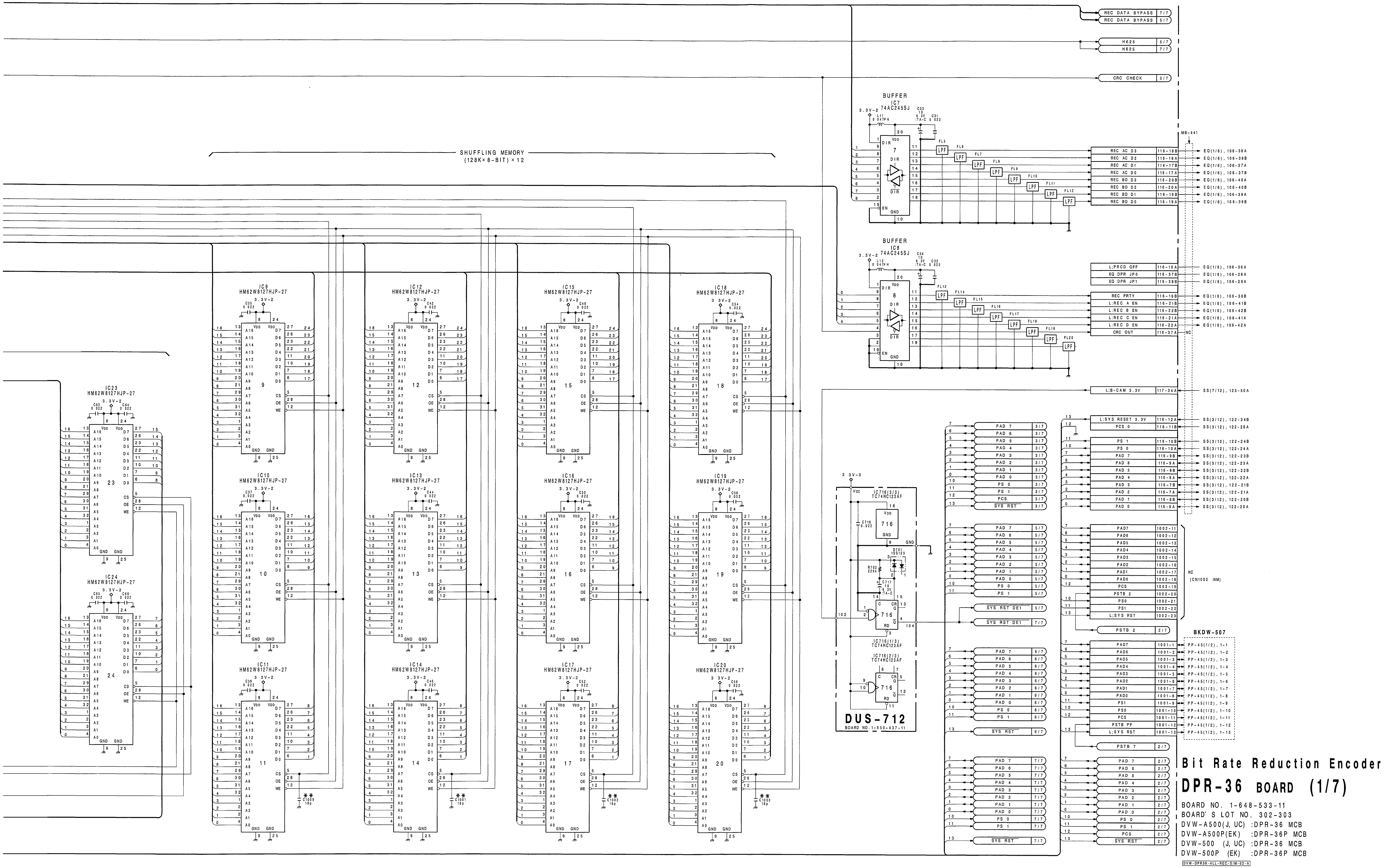

Bit Rate Reduction Encoder

DPR-36 BOARD (1/7)

BOARD NO. 1-648-533-11
BOARD' S LOT NO. 302-303
DVW-A500(J, UC) :DPR-36 MCB
DVW-A500P(EK) :DPR-36P MCB
DVW-500 (J, UC) :DPR-36 MCB
DVW-500P (EK) :DPR-36P MCB

DVW-DPR36-ALL-REC-SIM-02-A

DPR-36 (2/7)

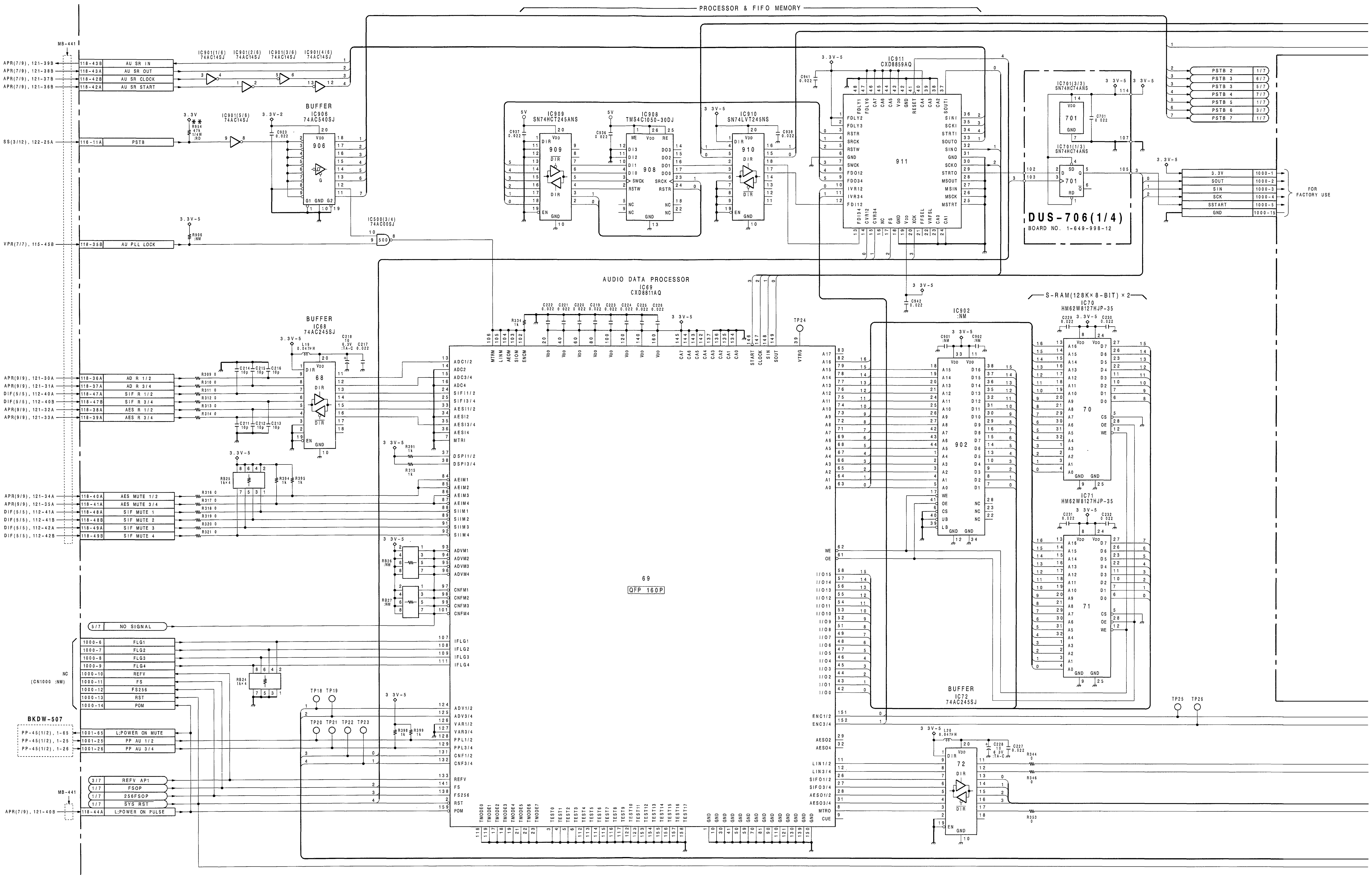

1-52 (a)

A B C D E F G H

http://getMANUAL.com

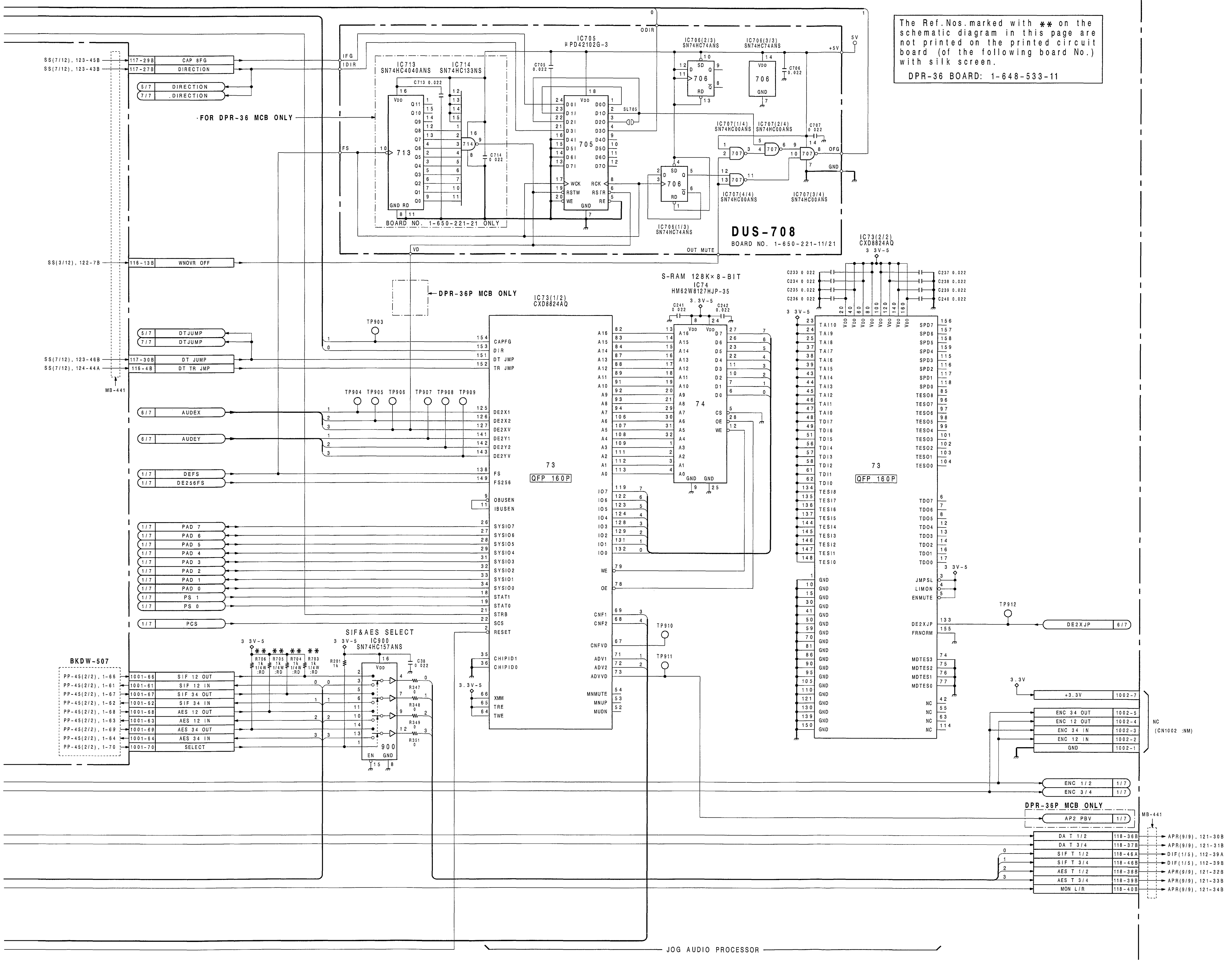

1 2 3 4 5

Audio Data Processor, Jog Audio Data Processor

DPR-36 BOARD (2/7)

BOARD NO. 1-648-533-11
BOARD' S LOT NO. 302-303
DVW-A500(J, UC) :DPR-36 MCB
DVW-A500P(EK) :DPR-36P MCB
DVW-500 (J, UC) :DPR-36 MCB
DVW-500P (EK) :DPR-36P MCB

DVW-DPR36-ALL-REC-S/M-02-A

I J K L M N O P

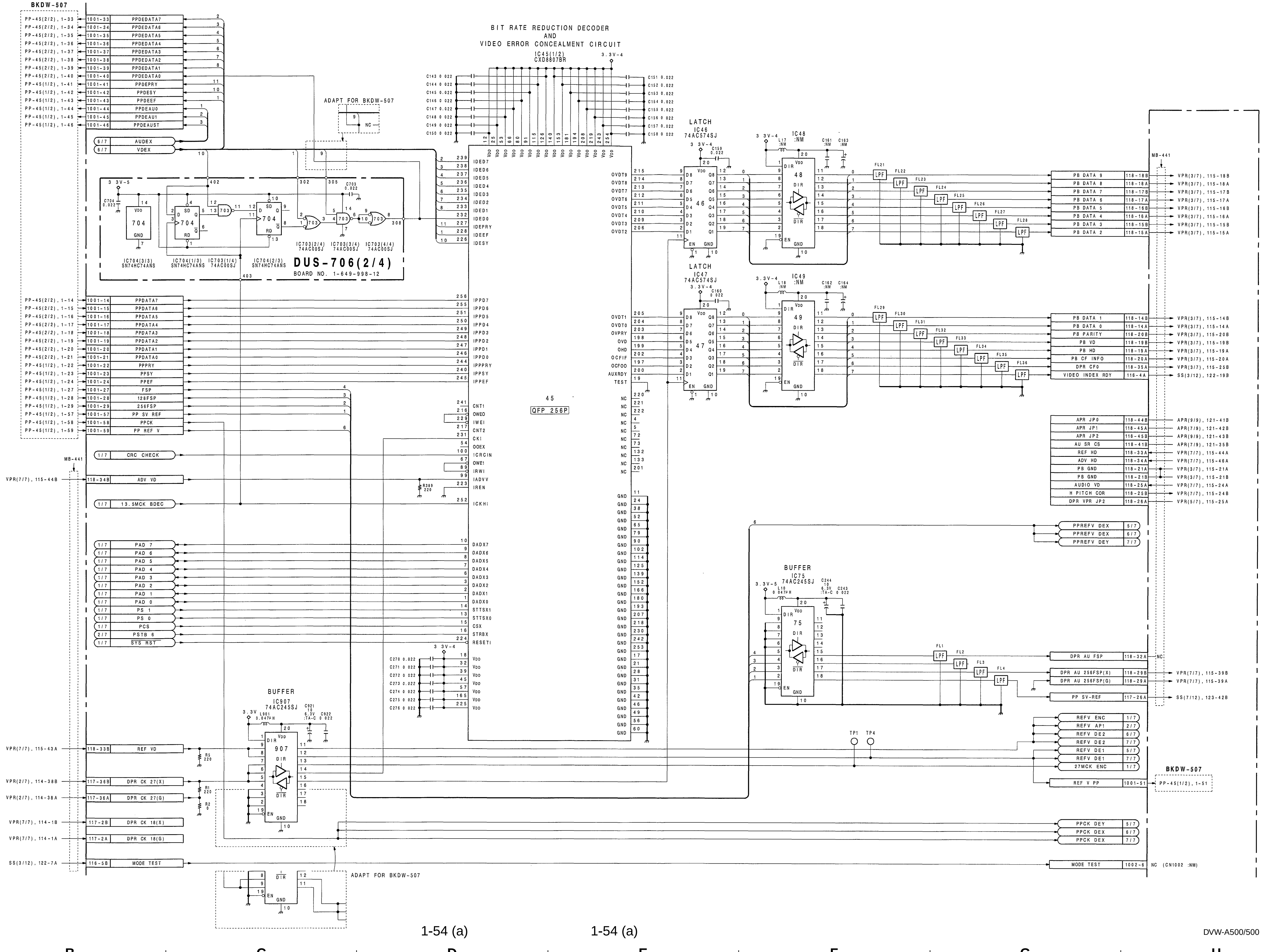
BKDW-507
BIT RATE REDUCTION DECODER AND VIDEO ERROR CONCEALMENT CIRCUIT
IC45(1/2) CXD8807BR
ADAPT FOR BKDW-507
DUS-706(2/4)
BOARD NO. 1-649-998-12
LATCH IC46 74AC574SJ
LATCH IC47 74AC574SJ
IC48 :NM
IC49 :NM
BUFFER IC75 74AC245SJ
BUFFER IC907 74AC245SJ
MB-441
QFP 256P
TP1
TP4
NC (CN1002 :NM)

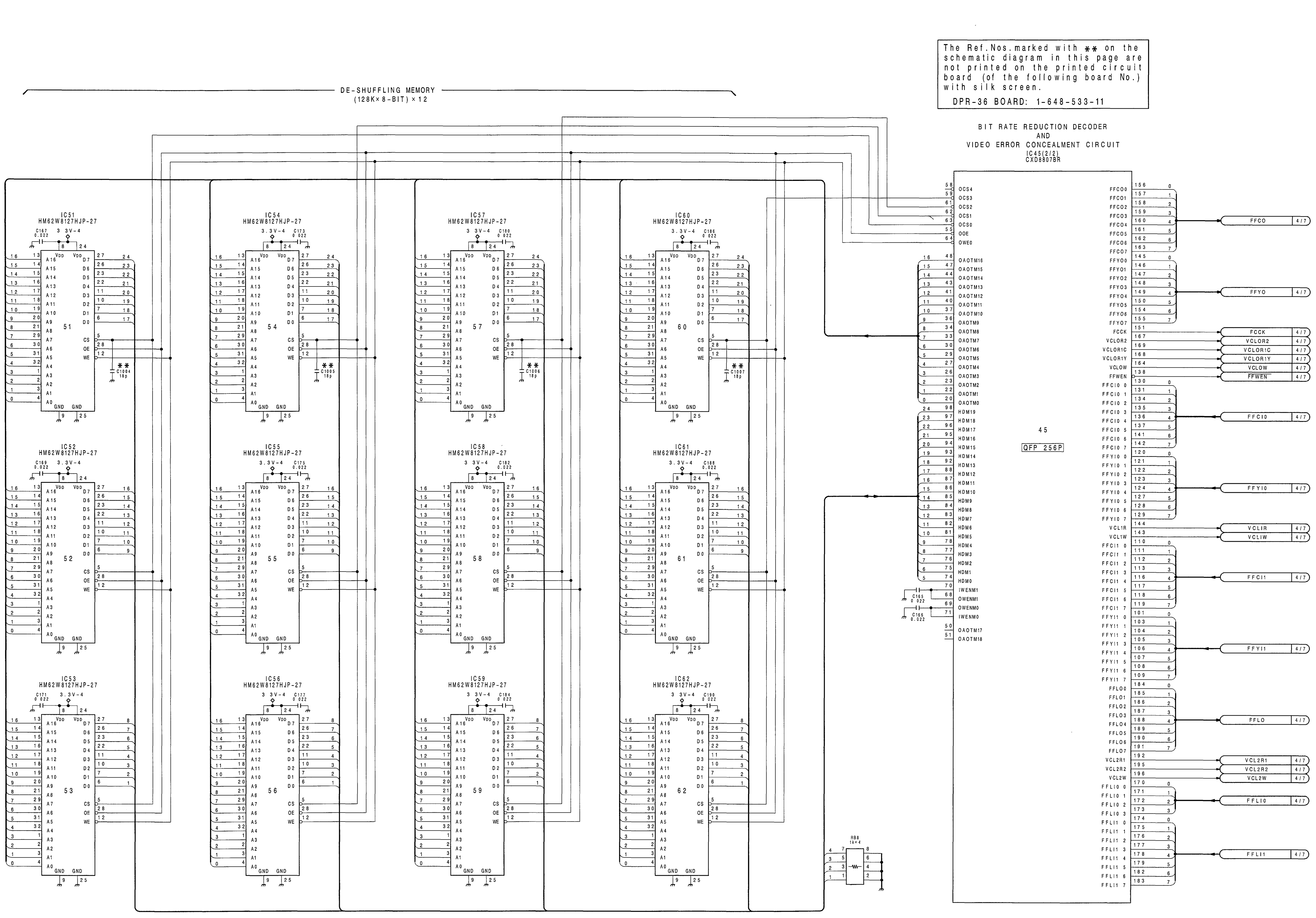

BIT Rate Reduction Decoder, Concealment Circuit

DPR-36 BOARD (3/7)

BOARD NO. 1-648-533-11
BOARD' S LOT NO. 302-303
DVW-A500(J, UC) :DPR-36 MCB
DVW-A500P(EK) :DPR-36P MCB
DVW-500 (J, UC) :DPR-36 MCB
DVW-500P (EK) :DPR-36P MCB

DVW-DPR36-ALL-REC-S/M-02-A

1 2 3 4 5

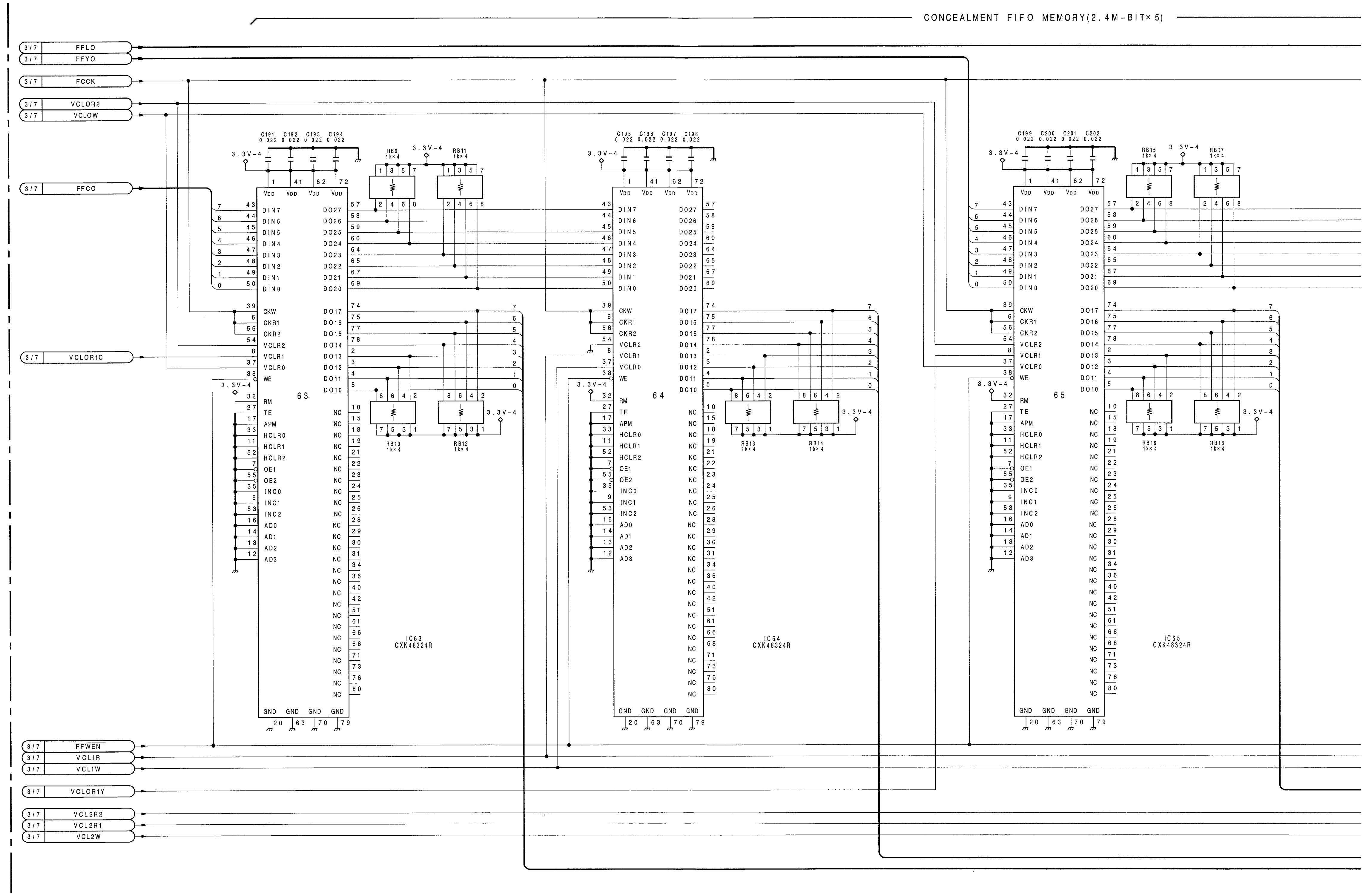
CONCEALMENT FIFO MEMORY(2.4M-BIT×5)
FFLO
FFYO
FCCK
VCLOR2
VCLOW
FFCO
VCLOR1C
FFWEN
VCLIR
VCLIW
VCLOR1Y
VCL2R2
VCL2R1
VCL2W
IC63
CXK48324R
IC64
CXK48324R
IC65
CXK48324R

 DPR-36 (4/7)

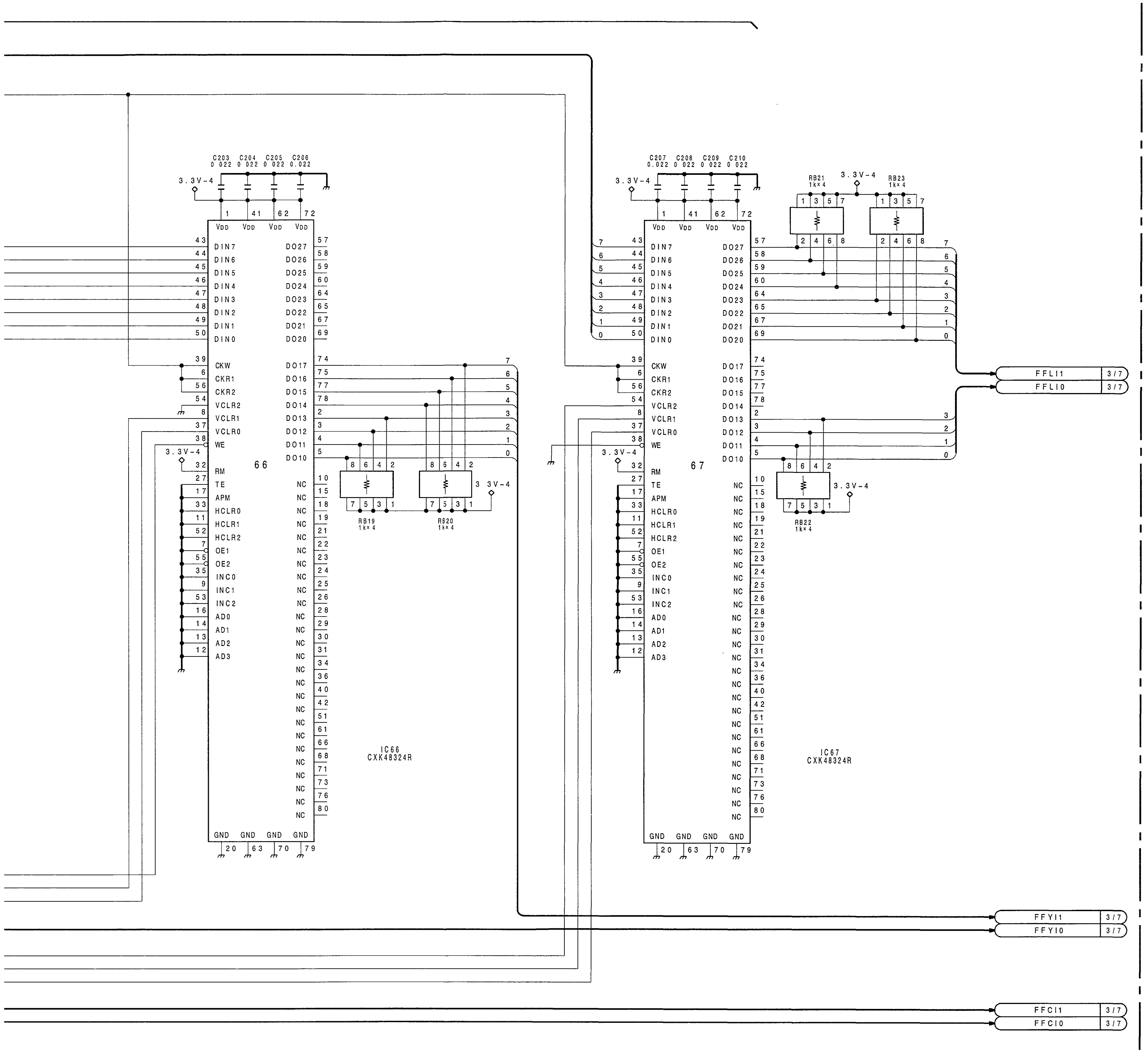

Concealment FIFO Memory

DPR-36 BOARD (4/7)

BOARD NO. 1-648-533-11
BOARD' S LOT NO. 302-303
DVW-A500(J, UC) :DPR-36 MCB
DVW-A500P(EK) :DPR-36P MCB
DVW-500 (J, UC) :DPR-36 MCB
DVW-500P (EK) :DPR-36P MCB

DVW-DPR36-ALL-REC-S/M-02-A

 1-57 (a)

 DPR-36 (5/7)

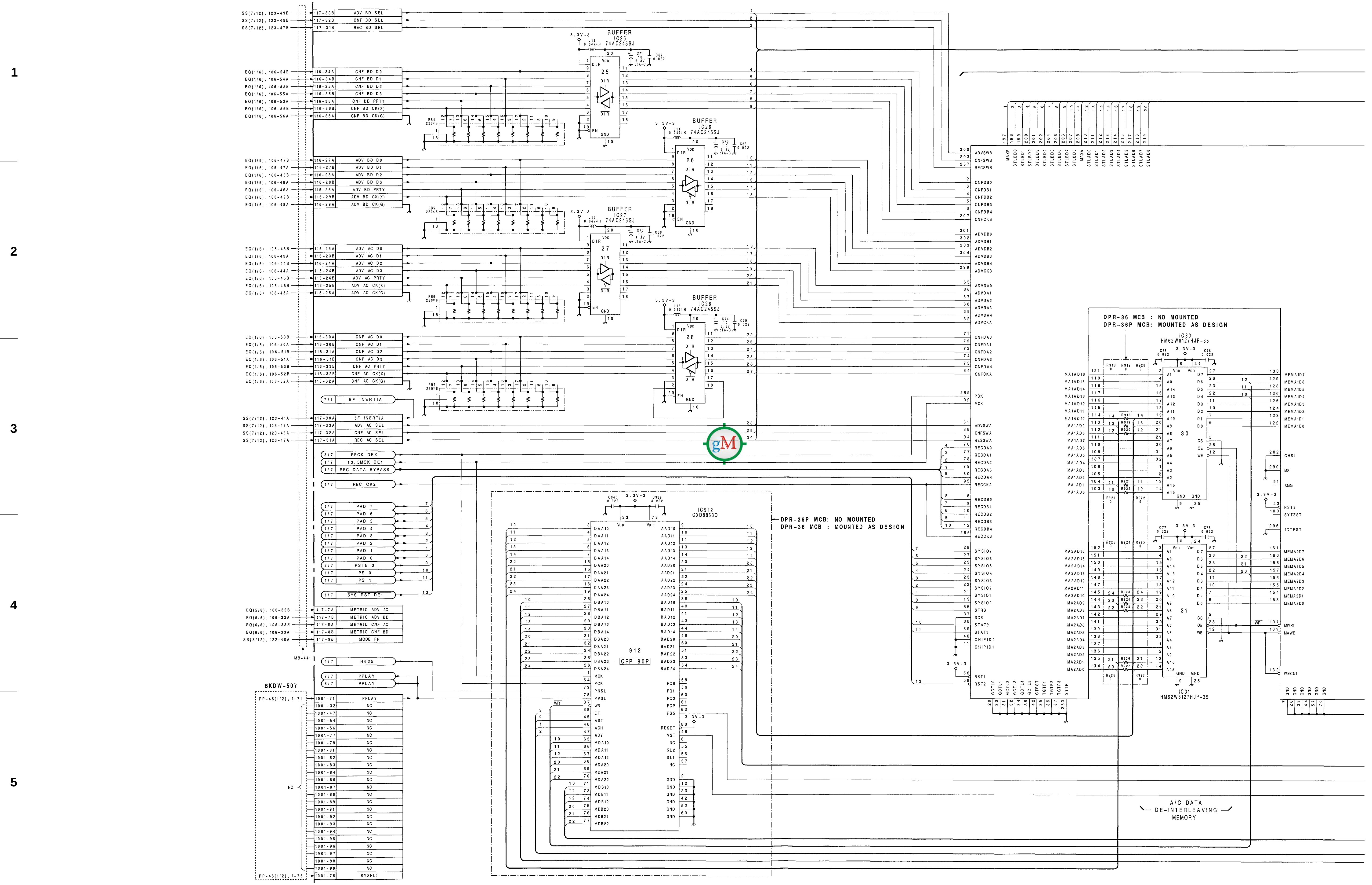

 1-58 (a)

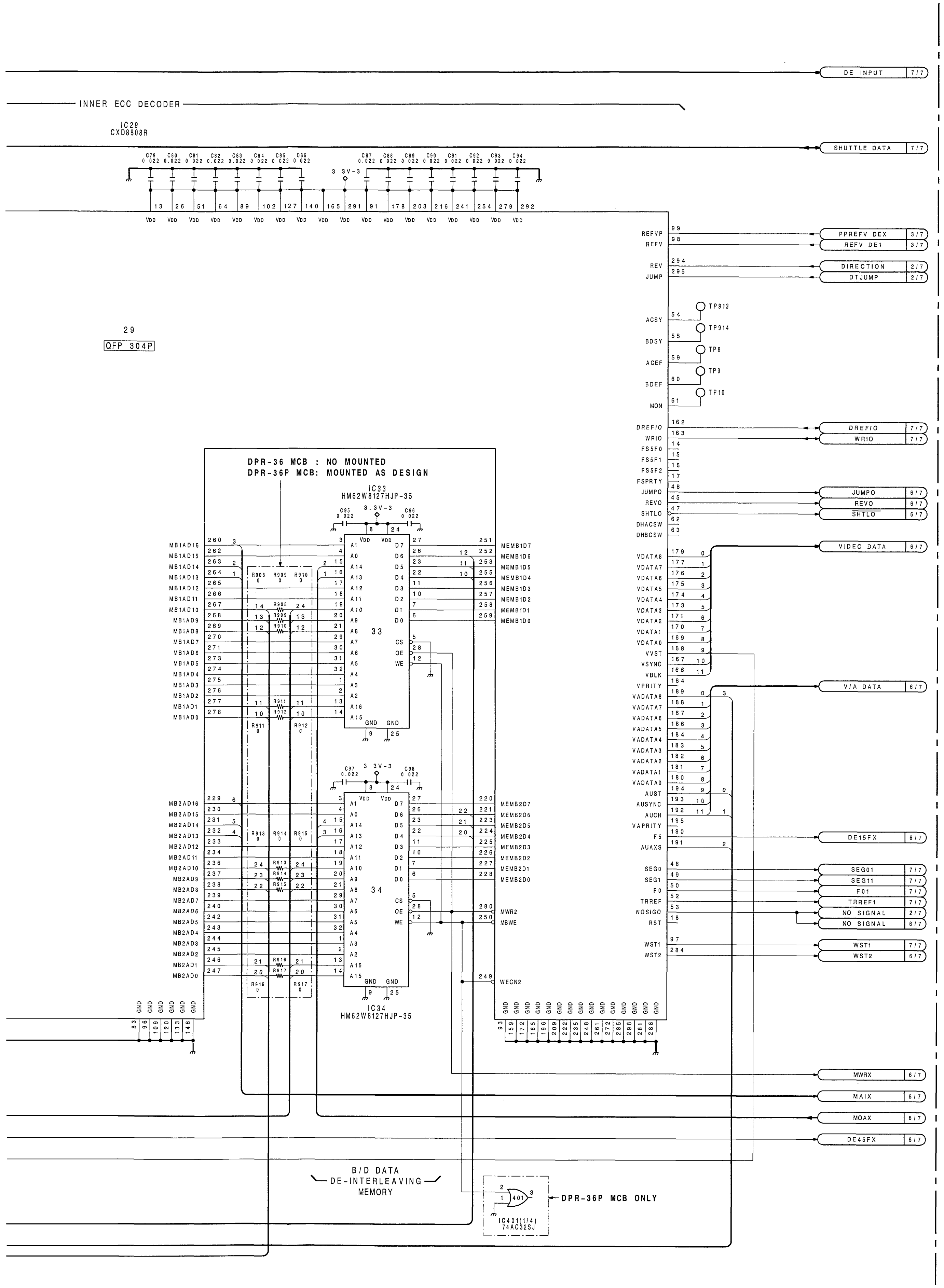

FOR DPR-36P MCB,
IC30, 31, 33 AND 34 ARE AS FOLLOWS:

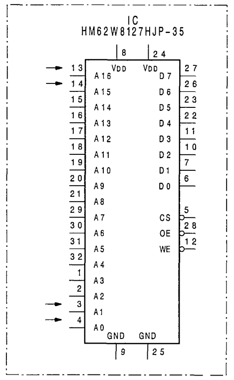

Inner ECC Decoder

DPR-36 BOARD (5/7)

BOARD NO. 1-648-533-11
BOARD' S LOT NO. 302-303
DVW-A500(J, UC) :DPR-36 MCB
DVW-A500P(EK) :DPR-36P MCB
DVW-500 (J, UC) :DPR-36 MCB
DVW-500P (EK) :DPR-36P MCB

DVW-DPR36-ALL-REC-S/M-02-A

The Ref.Nos.marked with ** on the schematic diagram in this page are not printed on the printed circuit board (of the following board No.) with silk screen.
DPR-36 BOARD: 1-648-533-11

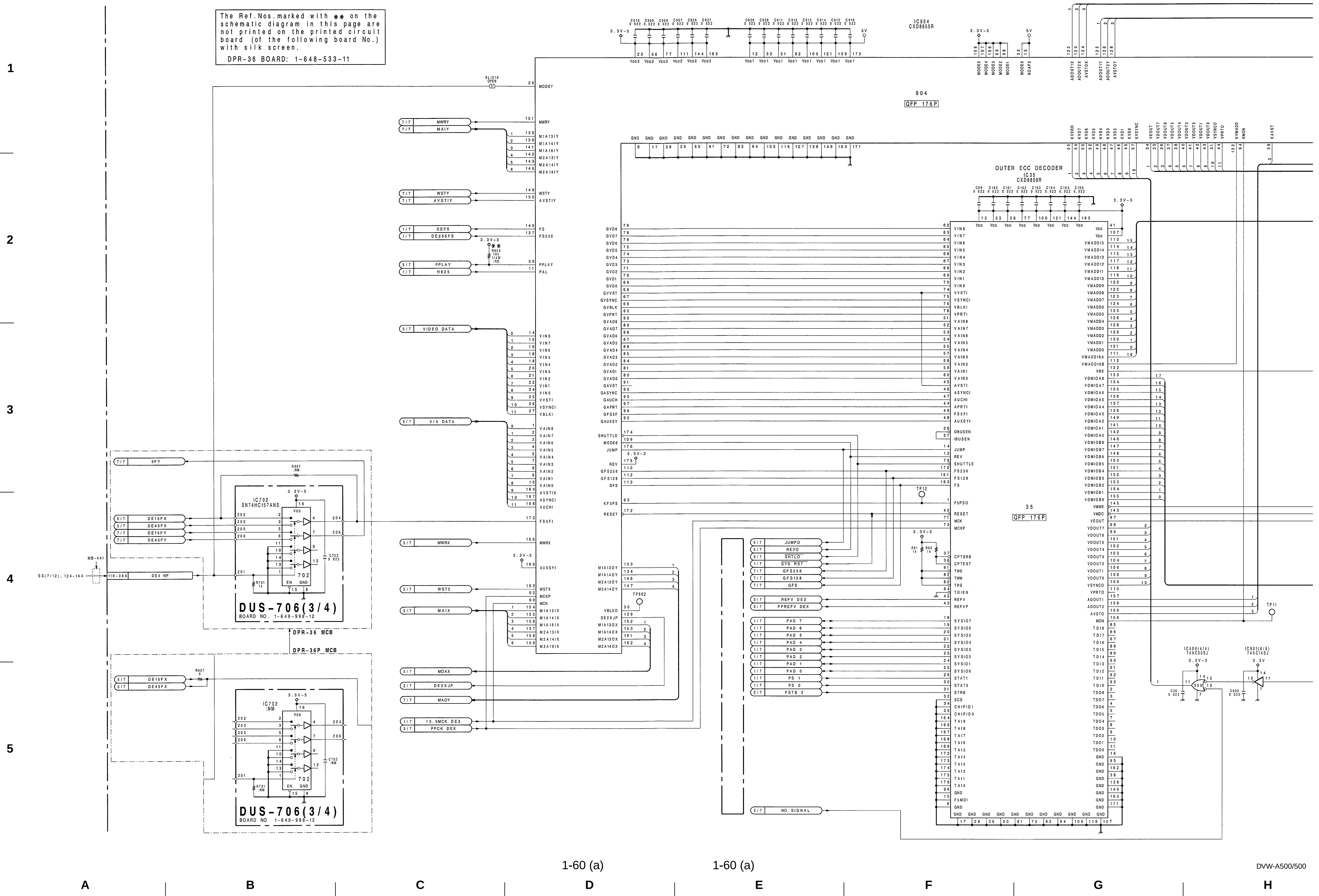

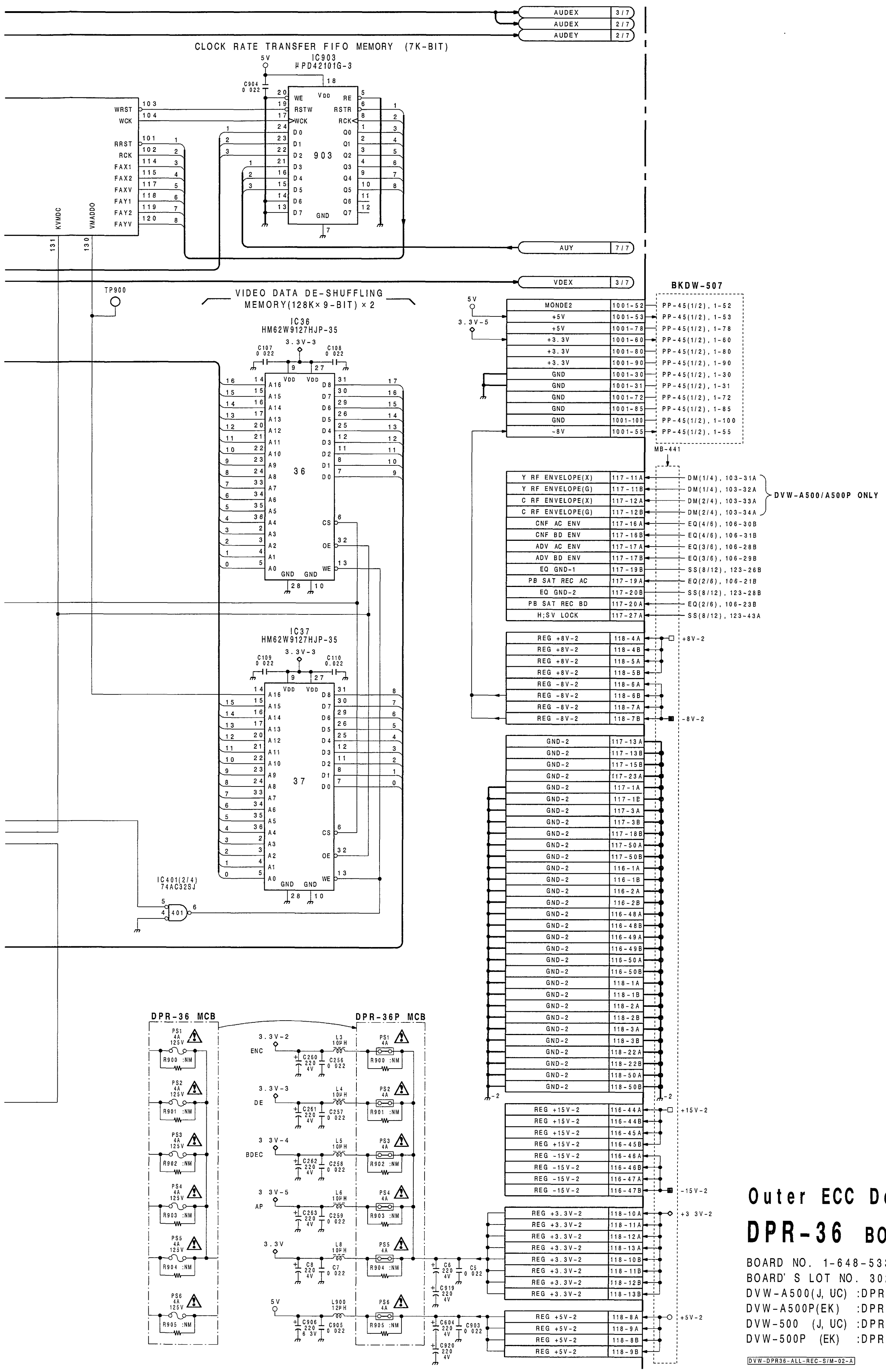

Outer ECC Decoder

DPR-36 BOARD (6/7)

BOARD NO. 1-648-533-11
BOARD' S LOT NO. 302-303
DVW-A500(J, UC) :DPR-36 MCB
DVW-A500P(EK) :DPR-36P MCB
DVW-500 (J, UC) :DPR-36 MCB
DVW-500P (EK) :DPR-36P MCB

DVW-DPR36-ALL-REC-S/M-02-A

1
2
3
4
5

 DPR-36 (7/7)

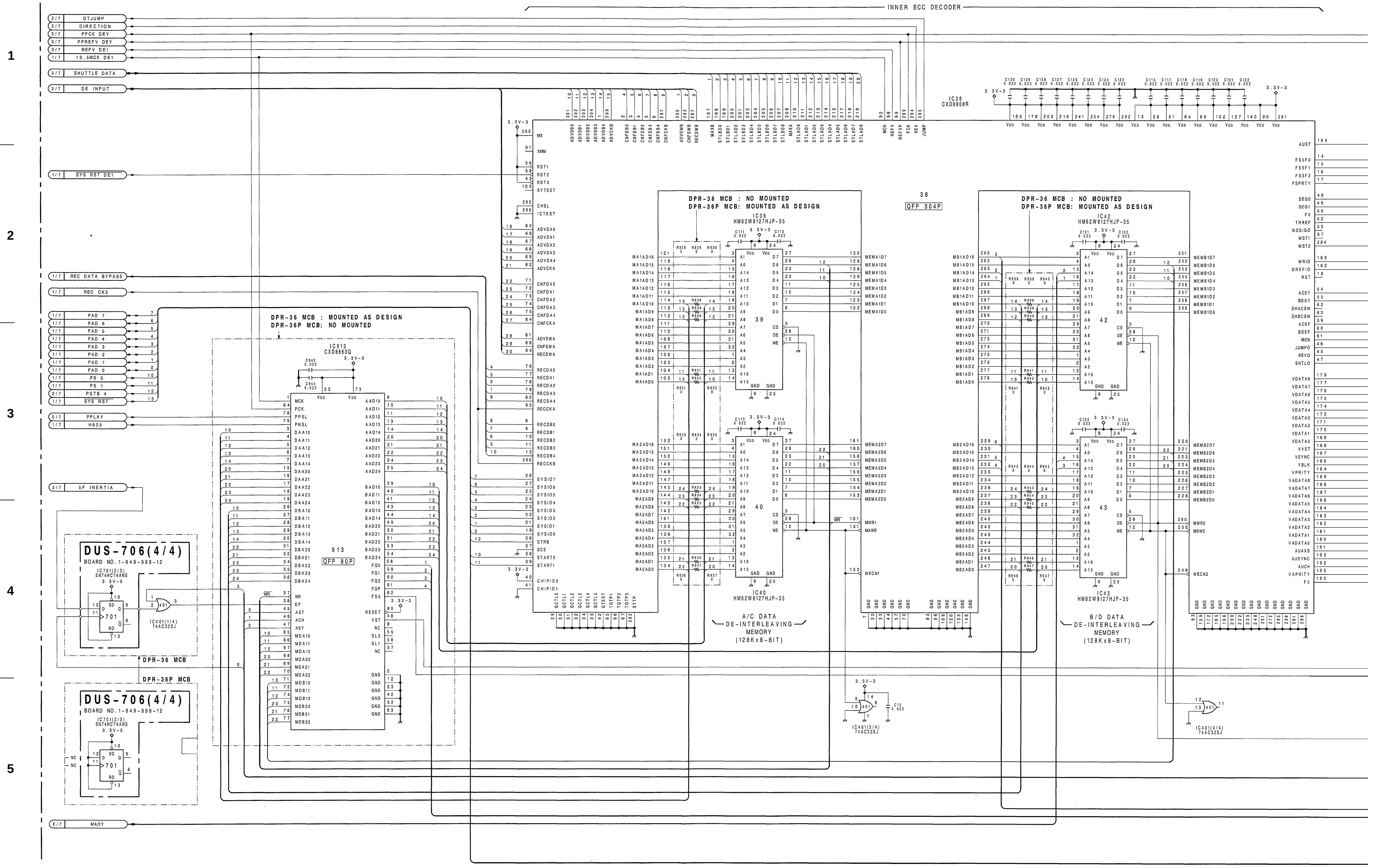

 1-62 (a)

A | B | C | D | E | F | G | H

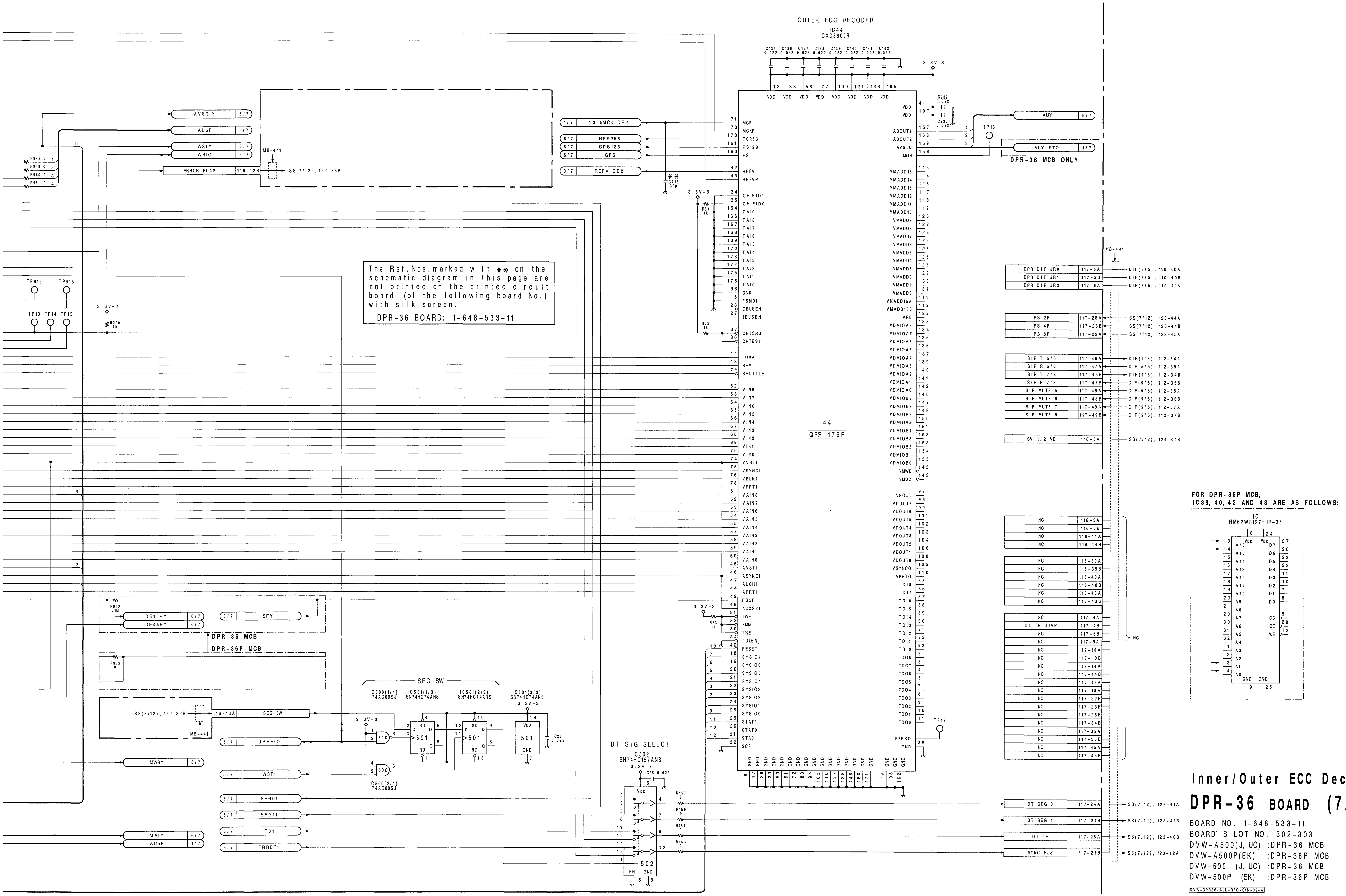

Inner/Outer ECC Decoder

DPR-36 BOARD (7/7)

BOARD NO. 1-648-533-11
BOARD' S LOT NO. 302-303
DVW-A500(J, UC) :DPR-36 MCB
DVW-A500P(EK) :DPR-36P MCB
DVW-500 (J, UC) :DPR-36 MCB
DVW-500P (EK) :DPR-36P MCB

EQ-45A/45

EQ-45 Board -A Side- (1-648-536-13/23)

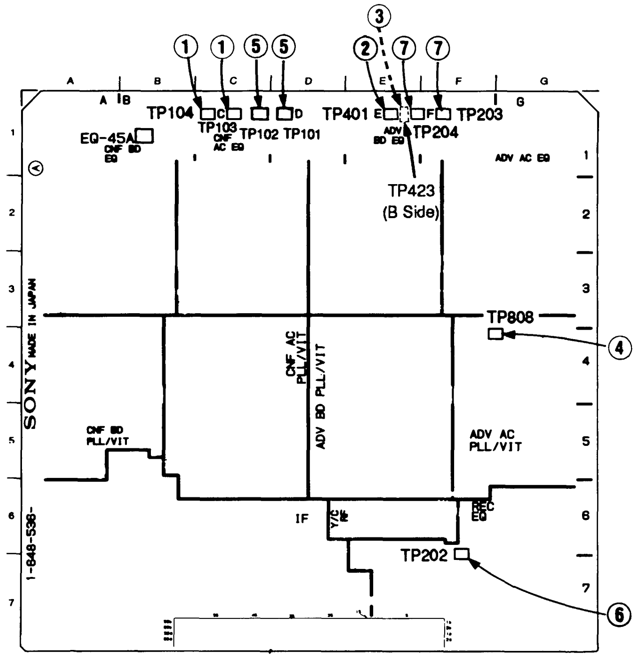

EQ-45 Board -A Side- (1-648-536-11, 12/22)

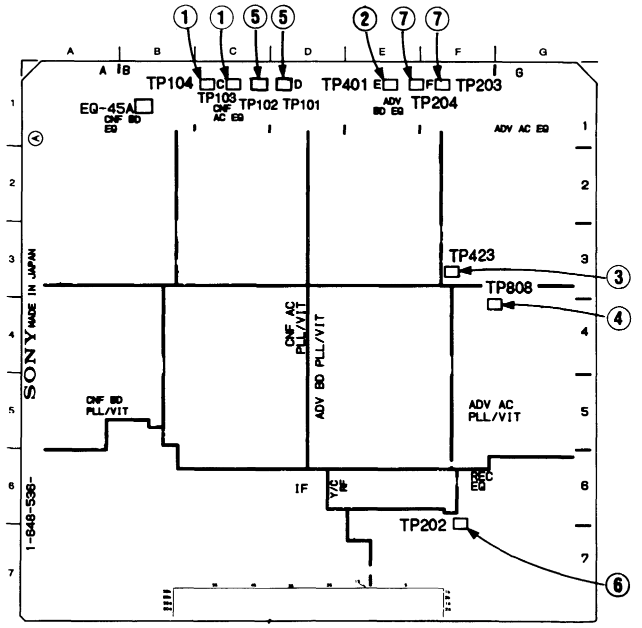

CR5-1B PB mode
(DVW-A500 ONLY)

①TP103(C-1) PB mode
TP104(C-1) PB mode
TP819(SS-52)(J-1)(TRIG)

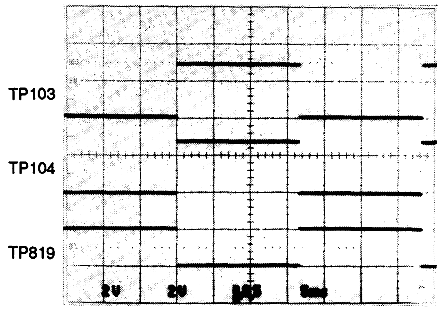

②TP401(E-1) PB mode(B/W LIMIT OFF)
TP103(C-1)(TRIG)

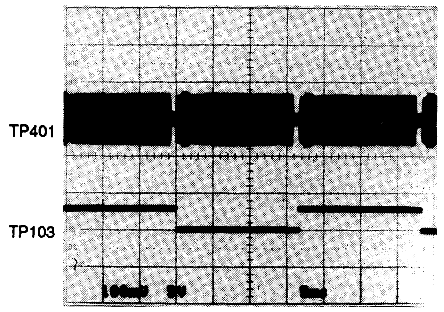

ZR5-1 PB mode

①TP103(C-1) PB mode
TP104(C-1) PB mode
TP819(SS-52)(J-1)(TRIG)

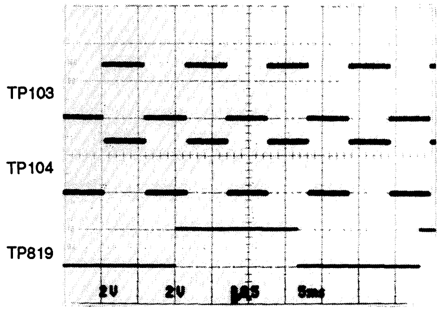

③ TP423 (E-1/F-3) PB mode
TP103(C-1)(TRIG)

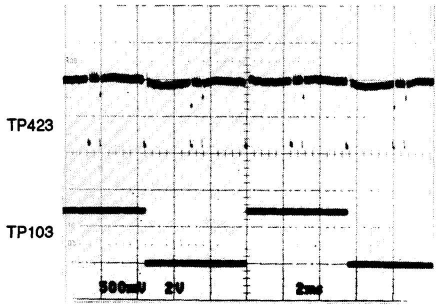

④TP808(G-4) PB mode
TP103(C-1)(TRIG)

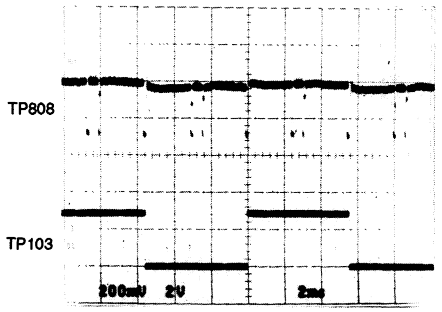

REC mode

⑤TP101(D-1) REC mode
TP102(C-1) REC mode
TP819(SS-52)(J-1)(TRIG)

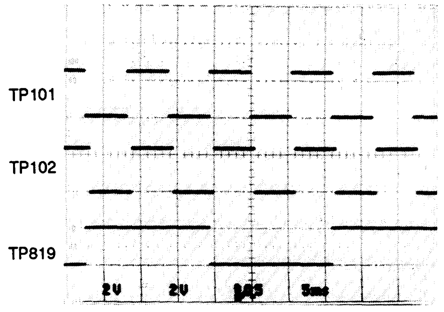

⑥TP202(F-6) REC mode
TP101(D-1)(TRIG)

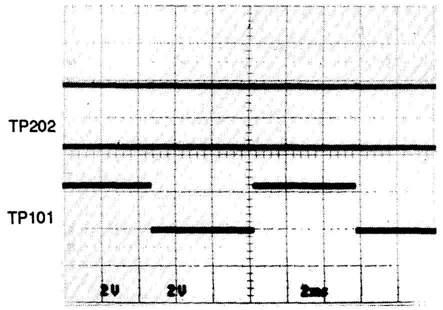

⑦TP203(F-1) REC mode
TP204(E-1) REC mode
TP103(C-1)(TRIG)

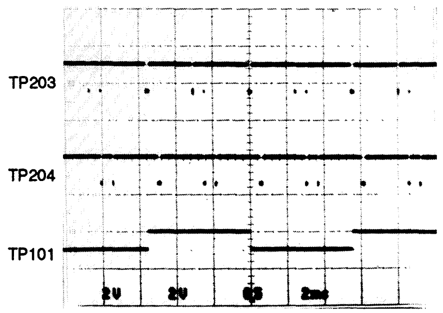

Measurement Condition
INPUT SIGNAL : 75% COLOR BARS
MODE : PB mode
: REC mode
TAPE : ZR5-1
: CR5-1B

For DVW-A500/500

 EQ-45A/45

CR5-1BPS PB mode
(DVW-A500P ONLY)

① TP103(C-1) PB mode
TP104(C-1) PB mode
TP819(SS-52A/52)(J-1)(TRIG)

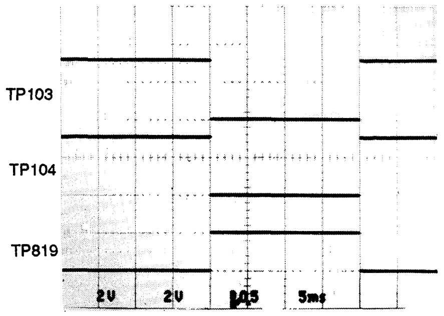

② TP401(E-1) PB mode(B/W LIMIT OFF)
TP103(C-1)(TRIG)

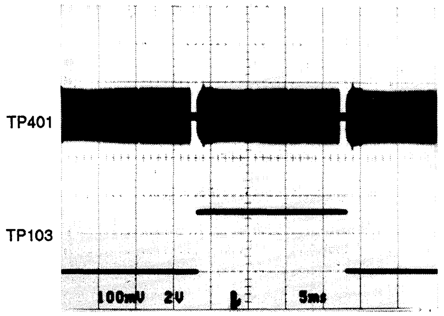

ZR5-1P PB mode

① TP103(C-1) PB mode
TP104(C-1) PB mode
TP819(SS-52A/52)(J-1)(TRIG)

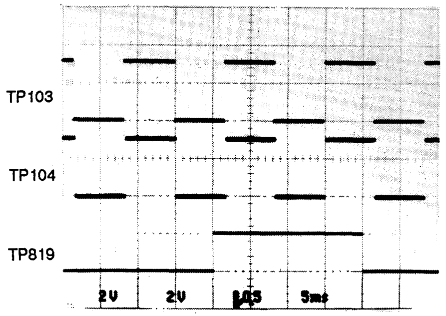

③ TP423 (E-1/F-3) PB mode
TP103(C-1)(TRIG)

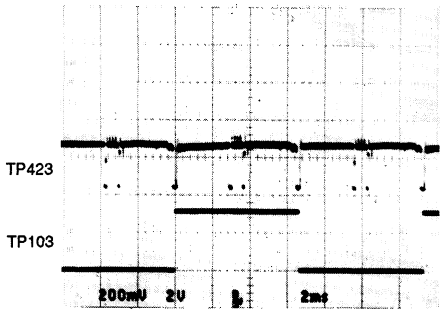

④ TP808(G-4) PB mode
TP103(C-1)(TRIG)

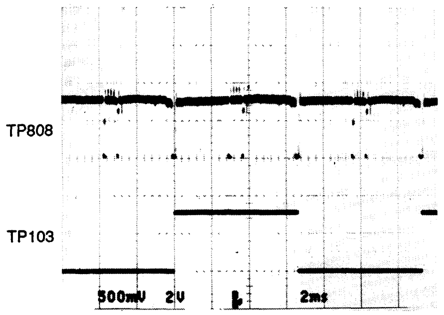

REC mode

⑤ TP101(D-1) REC mode
TP102(C-1) REC mode
TP819(SS-52A/52)(J-1)(TRIG)

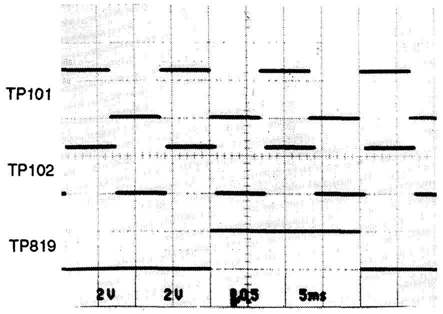

⑥ TP202(F-6) REC mode
TP101(D-1)(TRIG)

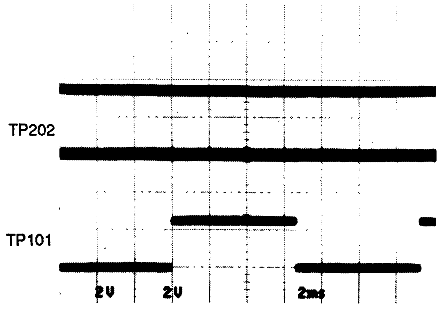

⑦ TP203(F-1) REC mode
TP204(E-1) REC mode
TP103(C-1)(TRIG)

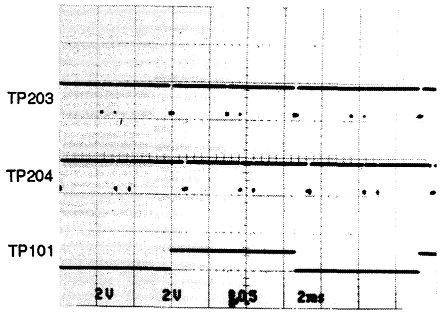

Measurement Condition
INPUT SIGNAL : 100% COLOR BARS
MODE : PB mode
: REC mode
TAPE : ZR5-1P
: CR5-1BPS

For DVW-A500P/500P

 1-67

 EQ-45A/45 (1/6)

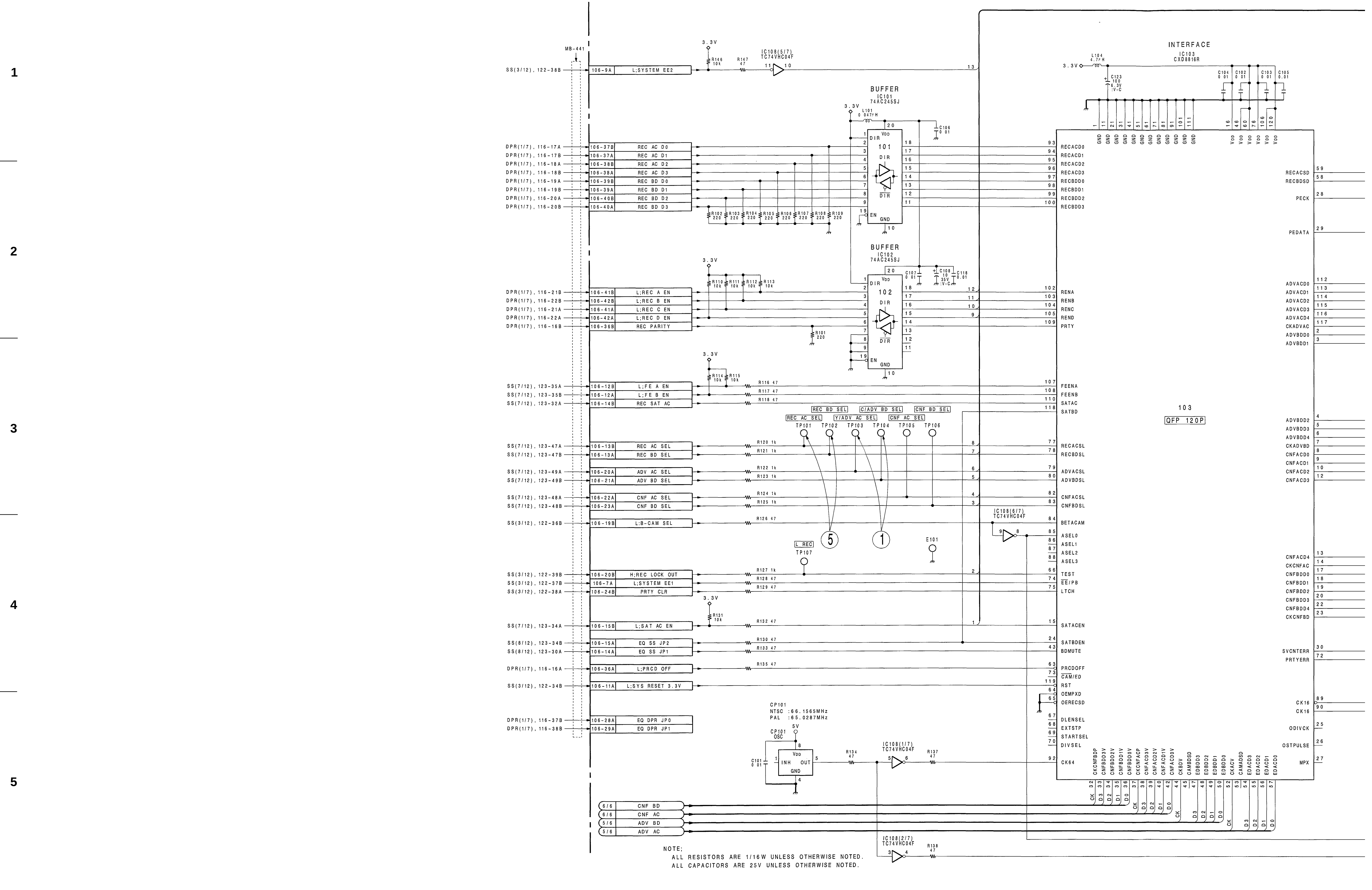

 1-68 (b)

EQ-45A/45 (1/6)

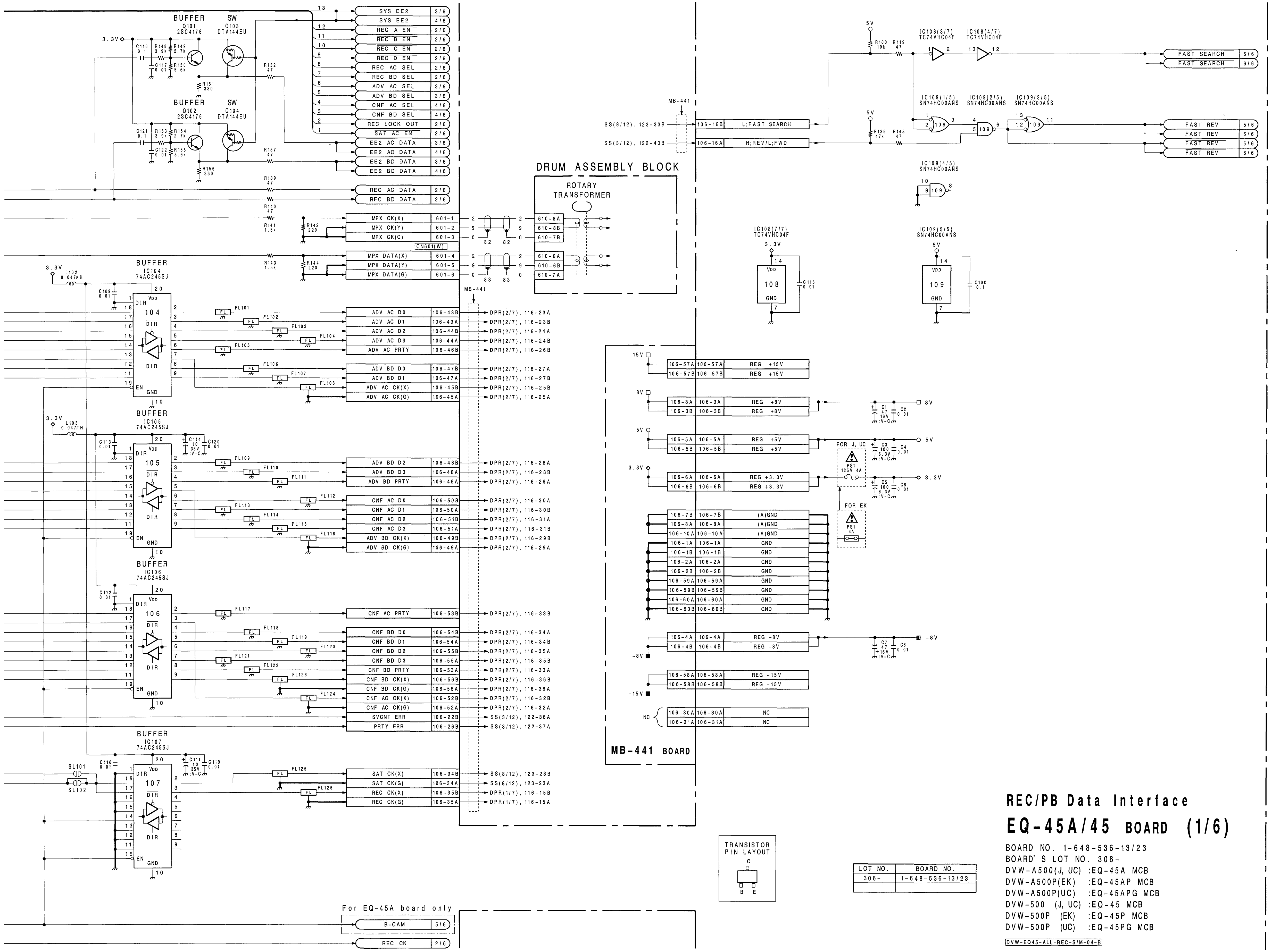
DRUM ASSEMBLY BLOCK
ROTARY TRANSFORMER
MB-441 BOARD
For EQ-45A board only
TRANSISTOR PIN LAYOUT
LOT NO. | BOARD NO.
306- | 1-648-536-13/23
REC/PB Data Interface
EQ-45A/45 BOARD (1/6)
BOARD NO. 1-648-536-13/23
BOARD' S LOT NO. 306-
DVW-A500(J, UC) :EQ-45A MCB
DVW-A500P(EK) :EQ-45AP MCB
DVW-A500P(UC) :EQ-45APG MCB
DVW-500 (J, UC) :EQ-45 MCB
DVW-500P (EK) :EQ-45P MCB
DVW-500P (UC) :EQ-45PG MCB
DVW-EQ45-ALL-REC-S/M-04-B

EQ-45A/45 (2/6)

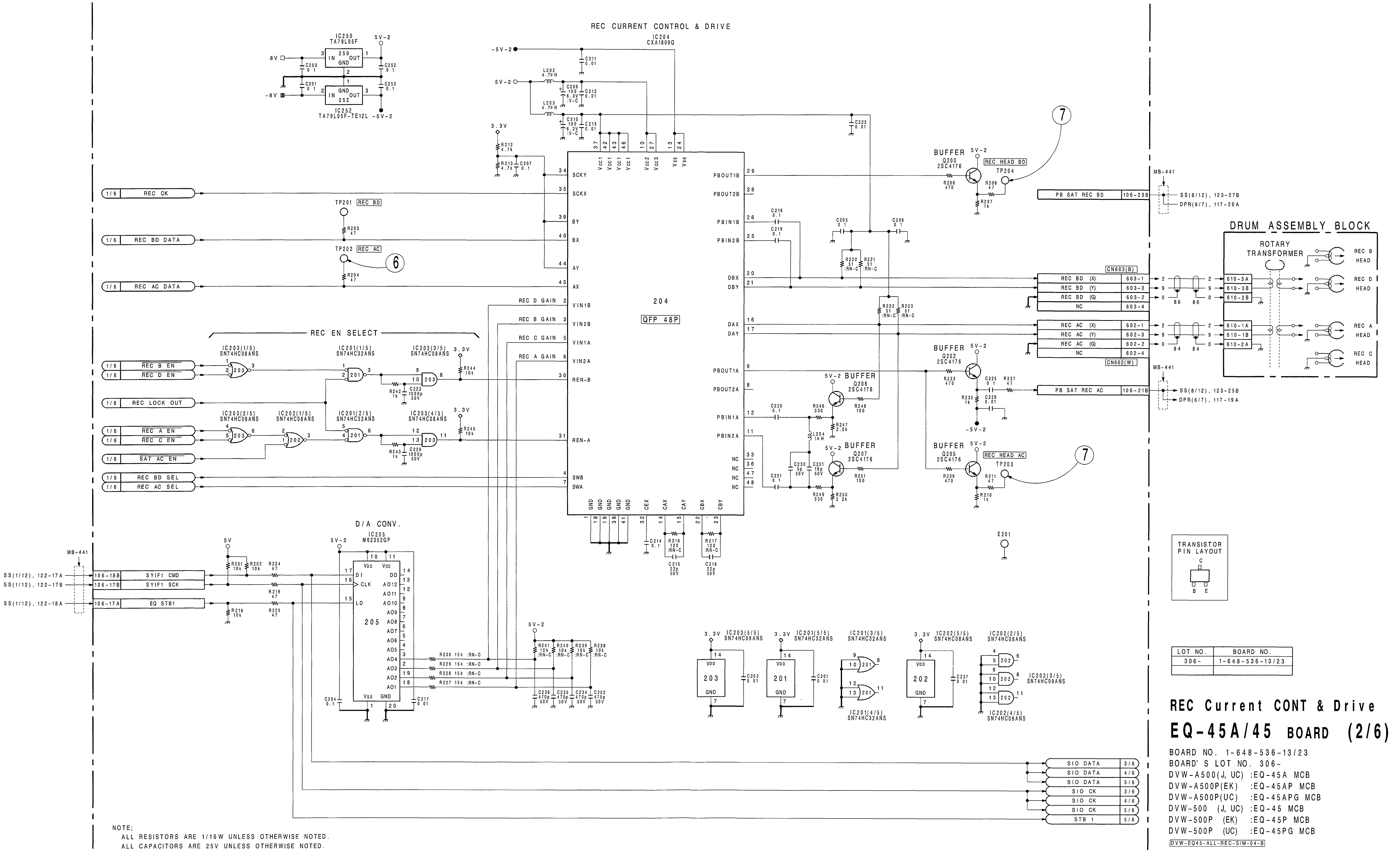

LOT NO.	BOARD NO.
306-	1-648-536-13/23

REC Current CONT & Drive

EQ-45A/45 BOARD (2/6)

BOARD NO. 1-648-536-13/23
BOARD' S LOT NO. 306-
DVW-A500(J, UC) :EQ-45A MCB
DVW-A500P(EK) :EQ-45AP MCB
DVW-A500P(UC) :EQ-45APG MCB
DVW-500 (J, UC) :EQ-45 MCB
DVW-500P (EK) :EQ-45P MCB
DVW-500P (UC) :EQ-45PG MCB
DVW-EQ45-ALL-REC-S/M-04-B

1-71 (b)

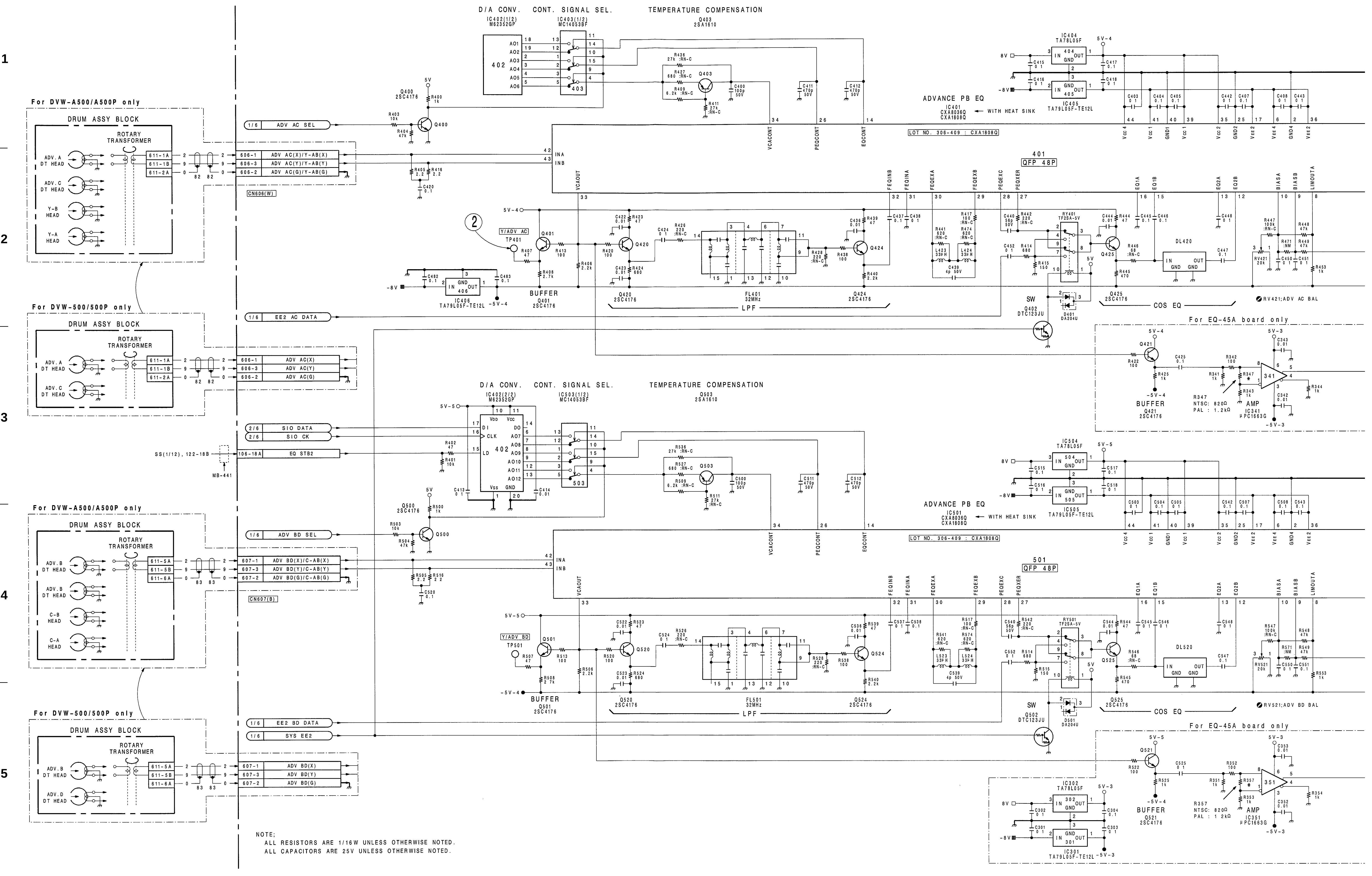
For DVW-A500/A500P only
DRUM ASSY BLOCK
ROTARY TRANSFORMER
For DVW-500/500P only
D/A CONV.
CONT. SIGNAL SEL.
TEMPERATURE COMPENSATION
ADVANCE PB EQ
LOT NO. 306-409 : CXA1808Q
BUFFER
LPF
COS EQ
SW
AMP
For EQ-45A board only
ADV AC SEL
EE2 AC DATA
SIO DATA
SIO CK
EQ STB2
ADV BD SEL
EE2 BD DATA
SYS EE2
RV421;ADV AC BAL
RV521;ADV BD BAL
NOTE;
ALL RESISTORS ARE 1/16W UNLESS OTHERWISE NOTED.
ALL CAPACITORS ARE 25V UNLESS OTHERWISE NOTED.

1

2

3

4

5

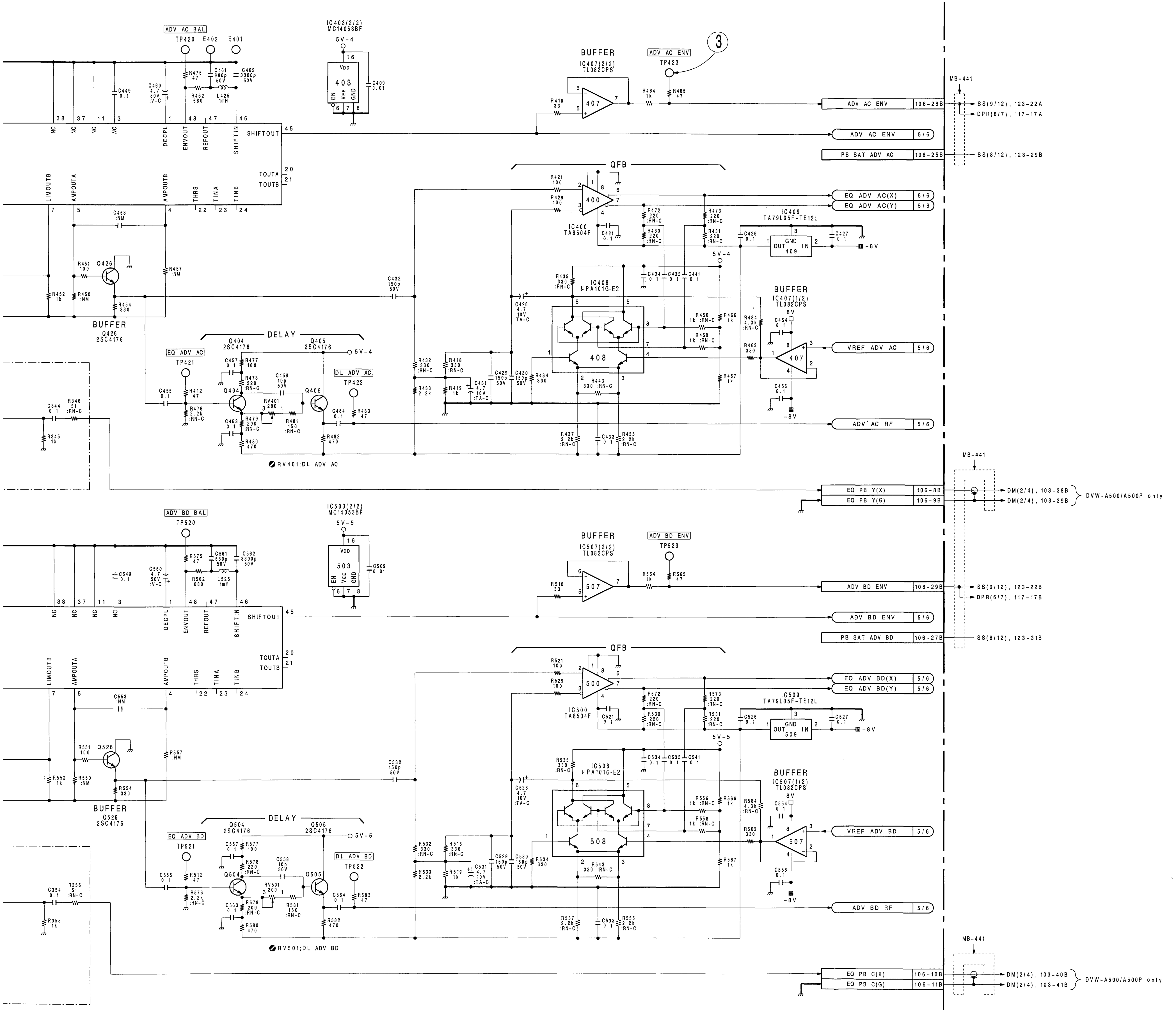

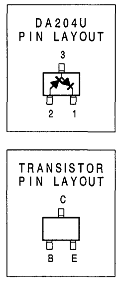

LOT NO.	BOARD NO.
306-	1-648-536-13/23

Advanced PB EQ

EQ-45A/45 BOARD (3/6)

BOARD NO. 1-648-539-13/23
BOARD' S LOT NO. 306-
DVW-A500(J, UC) :EQ-45A MCB
DVW-A500P(EK) :EQ-45AP MCB
DVW-A500P(UC) :EQ-45APG MCB
DVW-500 (J, UC) :EQ-45 MCB
DVW-500P (EK) :EQ-45P MCB
DVW-500P (UC) :EQ-45PG MCB

DVW-EQ45-ALL-REC-S/M-04-B

 EQ-45A/45 (4/6)

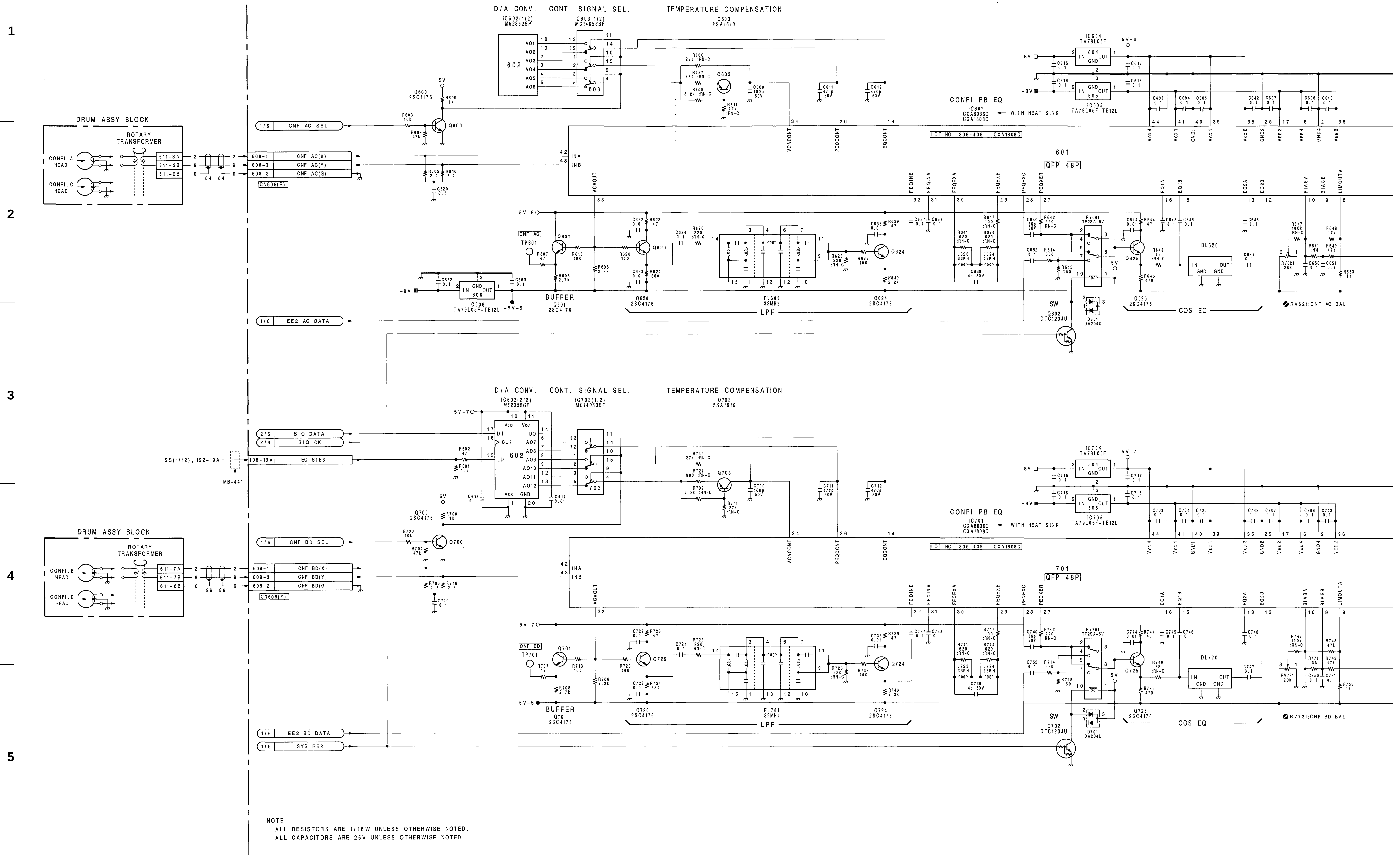

NOTE;
ALL RESISTORS ARE 1/16W UNLESS OTHERWISE NOTED.
ALL CAPACITORS ARE 25V UNLESS OTHERWISE NOTED.

 1-74 (b)

http://getMANUAL.com

 EQ-45A/45 (4/6)

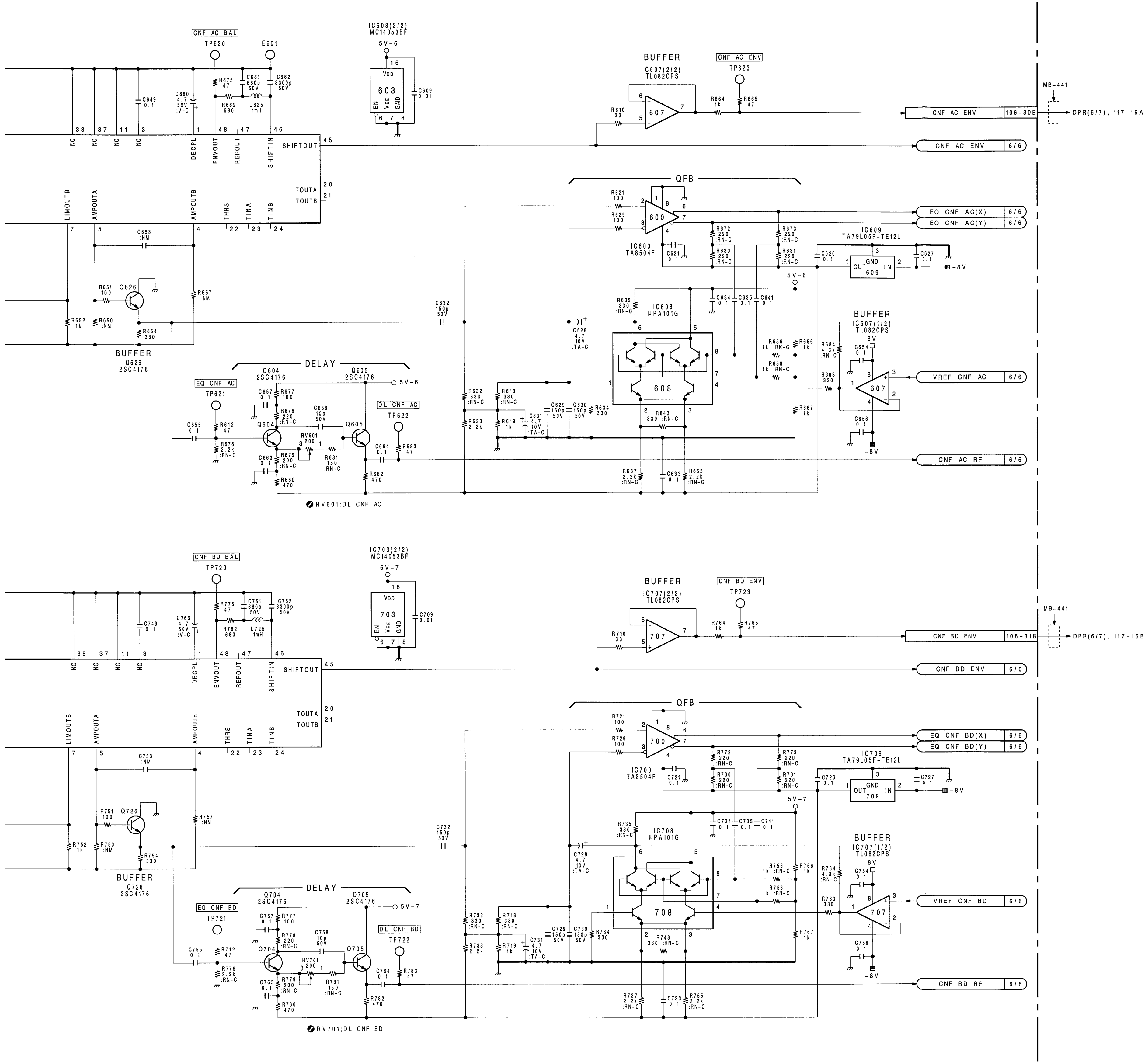

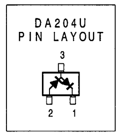

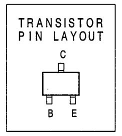

LOT NO.	BOARD NO.
306-	1-648-536-13/23

Confi PB EQ

EQ-45A/45 BOARD (4/6)

BOARD NO. 1-648-536-13/23
BOARD' S LOT NO. 306-
DVW-A500(J, UC) :EQ-45A MCB
DVW-A500P(EK) :EQ-45AP MCB
DVW-A500P(UC) :EQ-45APG MCB
DVW-500 (J, UC) :EQ-45 MCB
DVW-500P (EK) :EQ-45P MCB
DVW-500P (UC) :EQ-45PG MCB

DVW-EQ45-ALL-REC-S/M-04-B

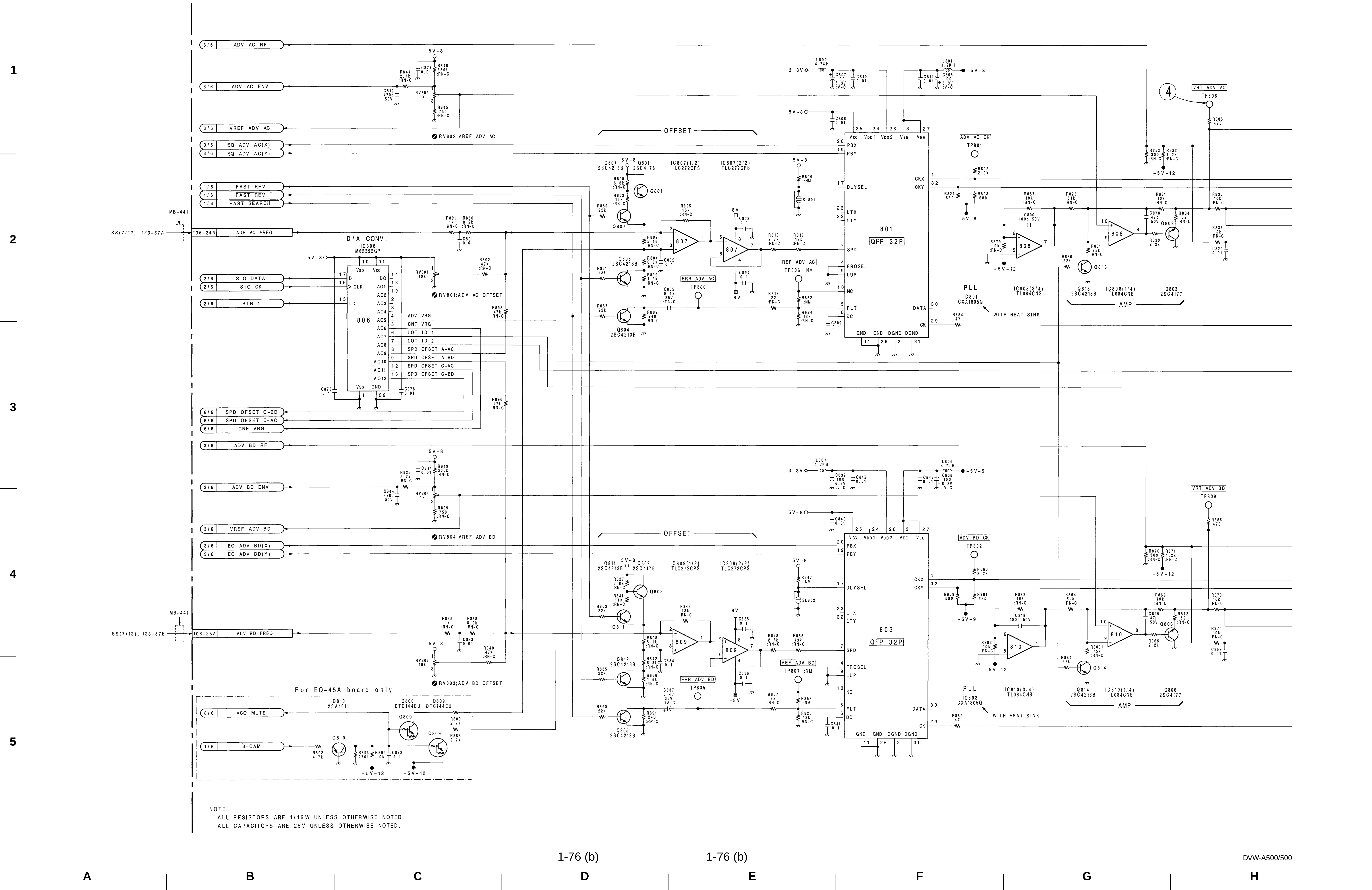

EQ-45A/45 (5/6)

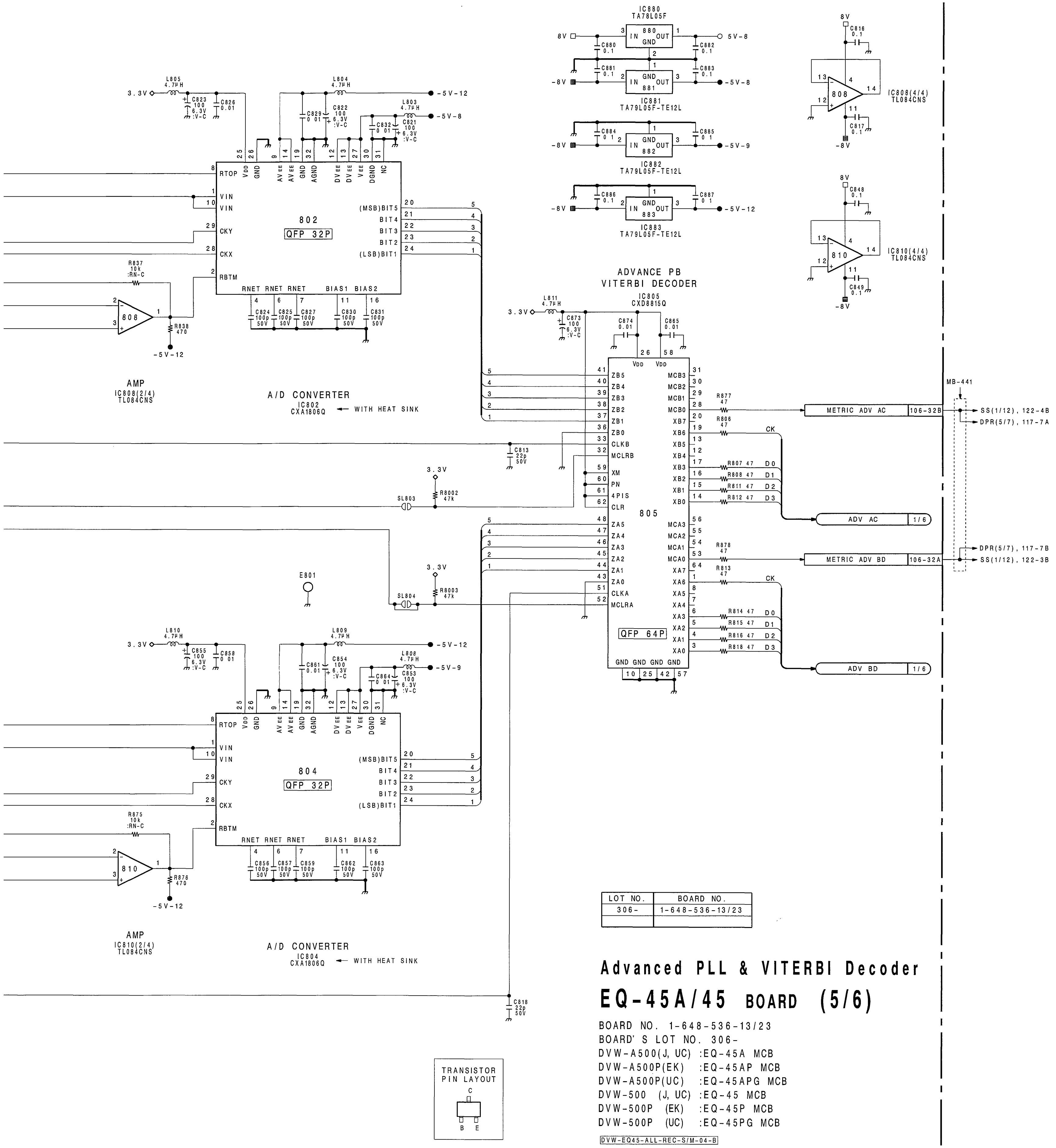

1
2
3
4
5

1-77 (b)

I J K L M N O P

 EQ-45A/45 (6/6)

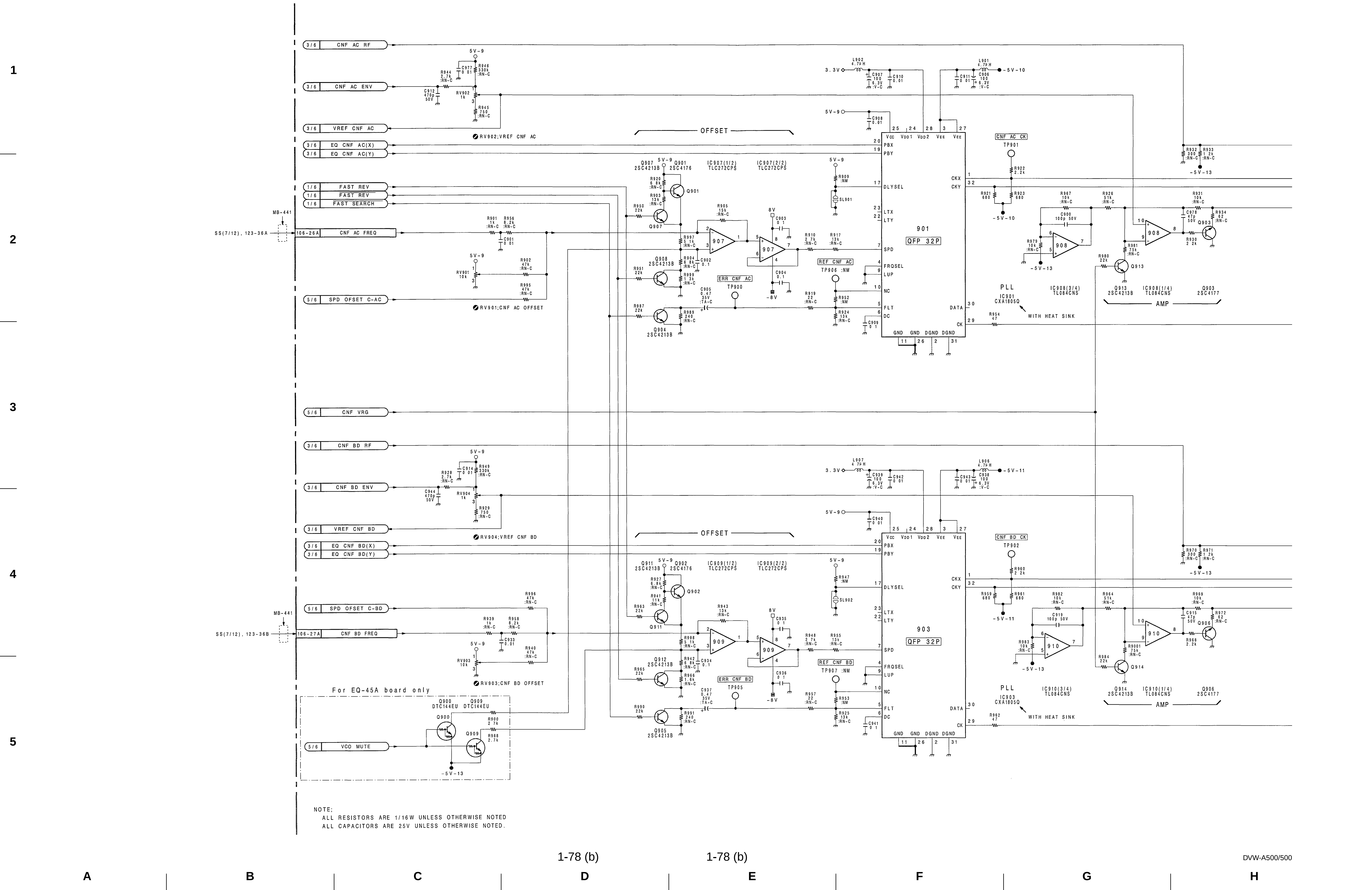

NOTE;
ALL RESISTORS ARE 1/16W UNLESS OTHERWISE NOTED
ALL CAPACITORS ARE 25V UNLESS OTHERWISE NOTED.

 EQ-45A/45 (6/6)

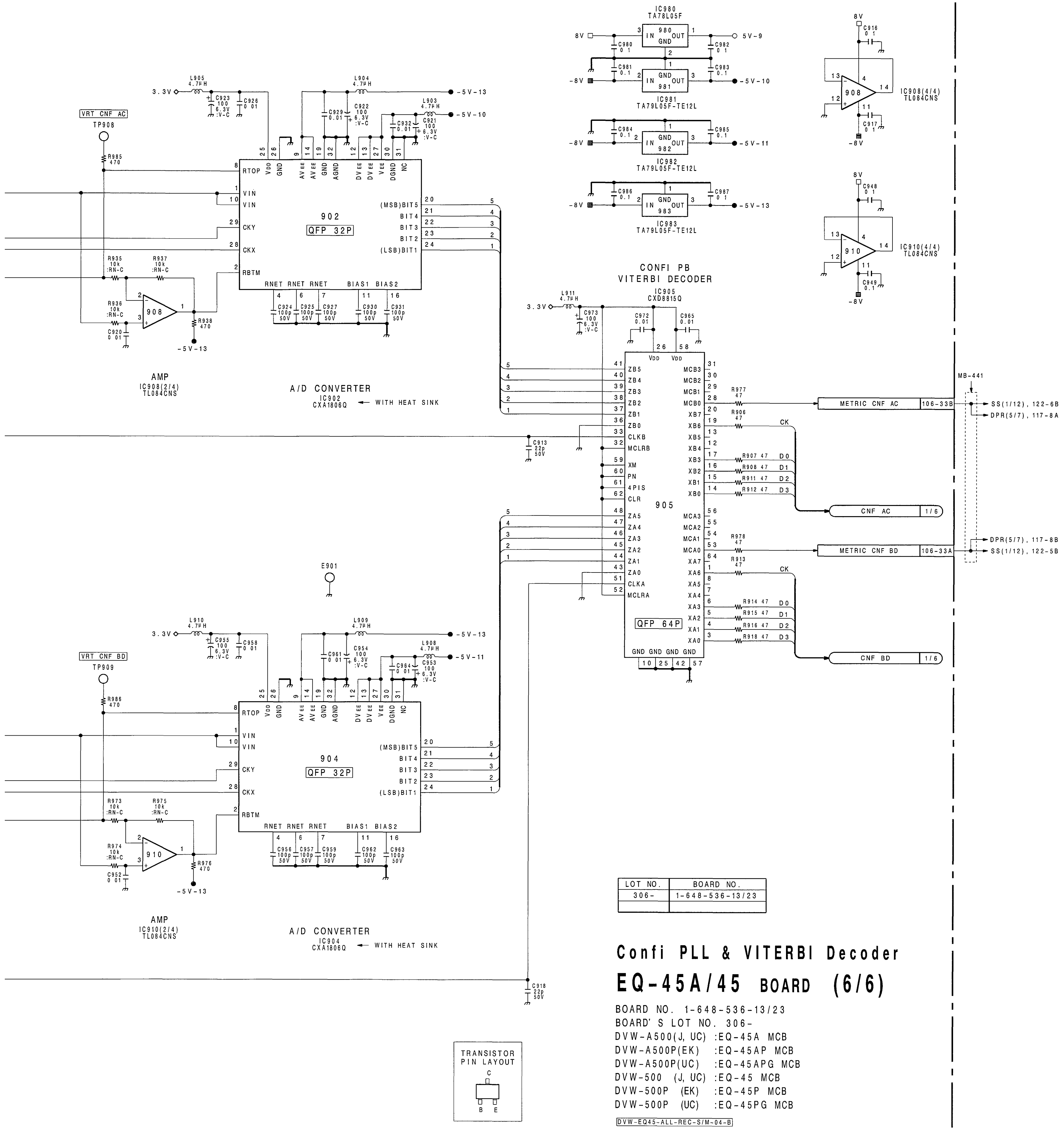

LOT NO.	BOARD NO.
306-	1-648-536-13/23

Confi PLL & VITERBI Decoder

EQ-45A/45 BOARD (6/6)

BOARD NO. 1-648-536-13/23
BOARD' S LOT NO. 306-
DVW-A500(J, UC) :EQ-45A MCB
DVW-A500P(EK) :EQ-45AP MCB
DVW-A500P(UC) :EQ-45APG MCB
DVW-500 (J, UC) :EQ-45 MCB
DVW-500P (EK) :EQ-45P MCB
DVW-500P (UC) :EQ-45PG MCB

DVW-EQ45-ALL-REC-S/M-04-B

1 2 3 4 5

 1-79 (b)

I J K L M N O P

 EQ-45A/45 (1/6)

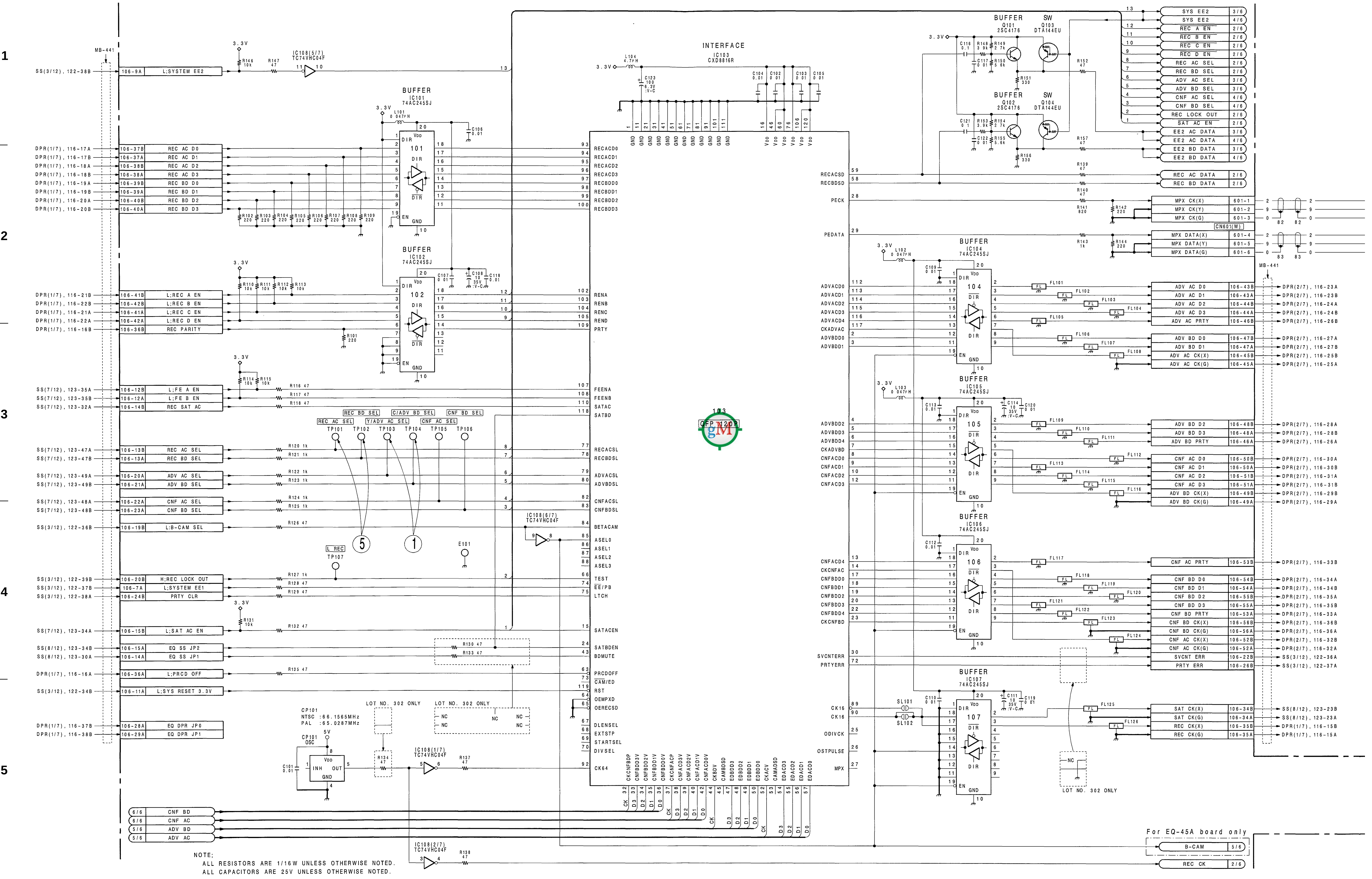

DVW-A500/500

A B C D E F G H

 EQ-45A/45 (1/6)

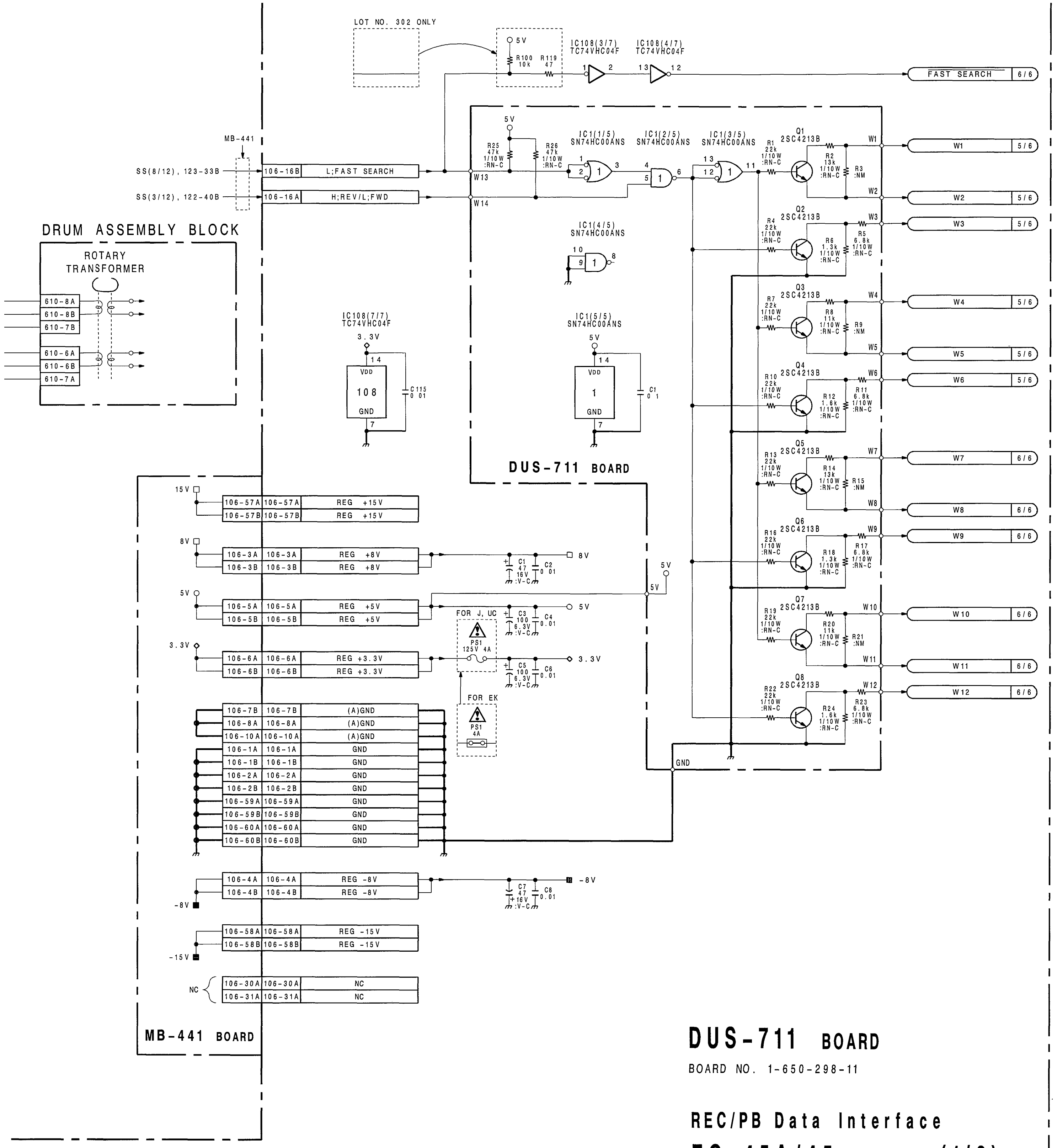

DUS-711 BOARD

BOARD NO. 1-650-298-11

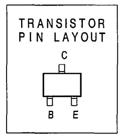

LOT NO.	EQ BOARD NO.
302	1-648-536-11
303-306	1-648-536-12/22

REC/PB Data Interface

EQ-45A/45 BOARD (1/6)

BOARD NO. 1-648-536-11, 12/22
BOARD' S LOT NO. 302-306
DVW-A500(J, UC) :EQ-45A MCB
DVW-A500P(EK) :EQ-45AP MCB
DVW-A500P(UC) :EQ-45APG MCB
DVW-500 (J, UC) :EQ-45 MCB
DVW-500P (EK) :EQ-45P MCB

DVW-EQ45-ALL-REC-S/M-04-A

 EQ-45A/45 (2/6)

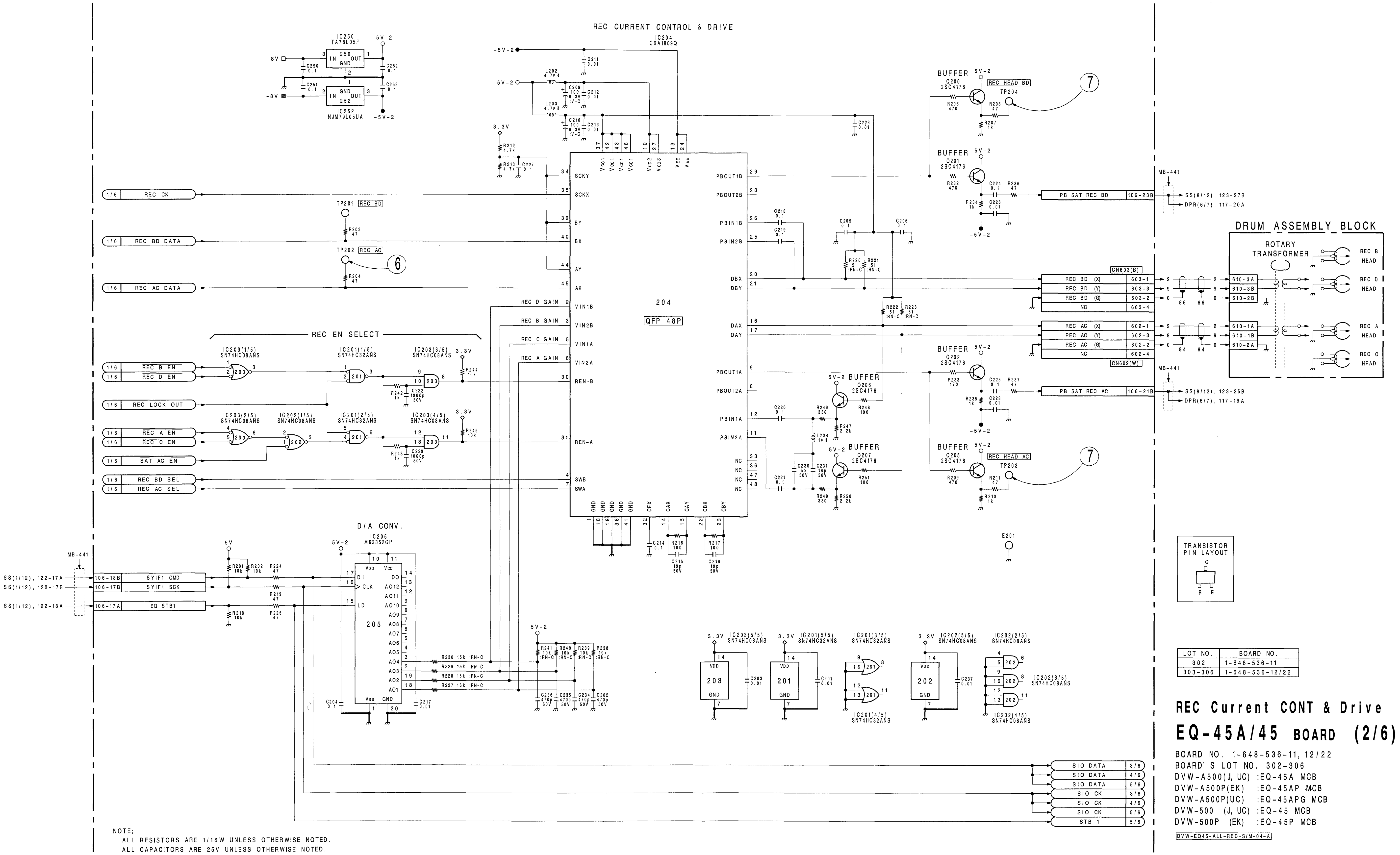

LOT NO.	BOARD NO.
302	1-648-536-11
303-306	1-648-536-12/22

REC Current CONT & Drive

EQ-45A/45 BOARD (2/6)

BOARD NO. 1-648-536-11, 12/22
BOARD' S LOT NO. 302-306
DVW-A500(J, UC) :EQ-45A MCB
DVW-A500P(EK) :EQ-45AP MCB
DVW-A500P(UC) :EQ-45APG MCB
DVW-500 (J, UC) :EQ-45 MCB
DVW-500P (EK) :EQ-45P MCB

DVW-EQ45-ALL-REC-S/M-04-A

NOTE;
ALL RESISTORS ARE 1/16W UNLESS OTHERWISE NOTED.
ALL CAPACITORS ARE 25V UNLESS OTHERWISE NOTED.

A B C D E F G H

 EQ-45A/45 (3/6)

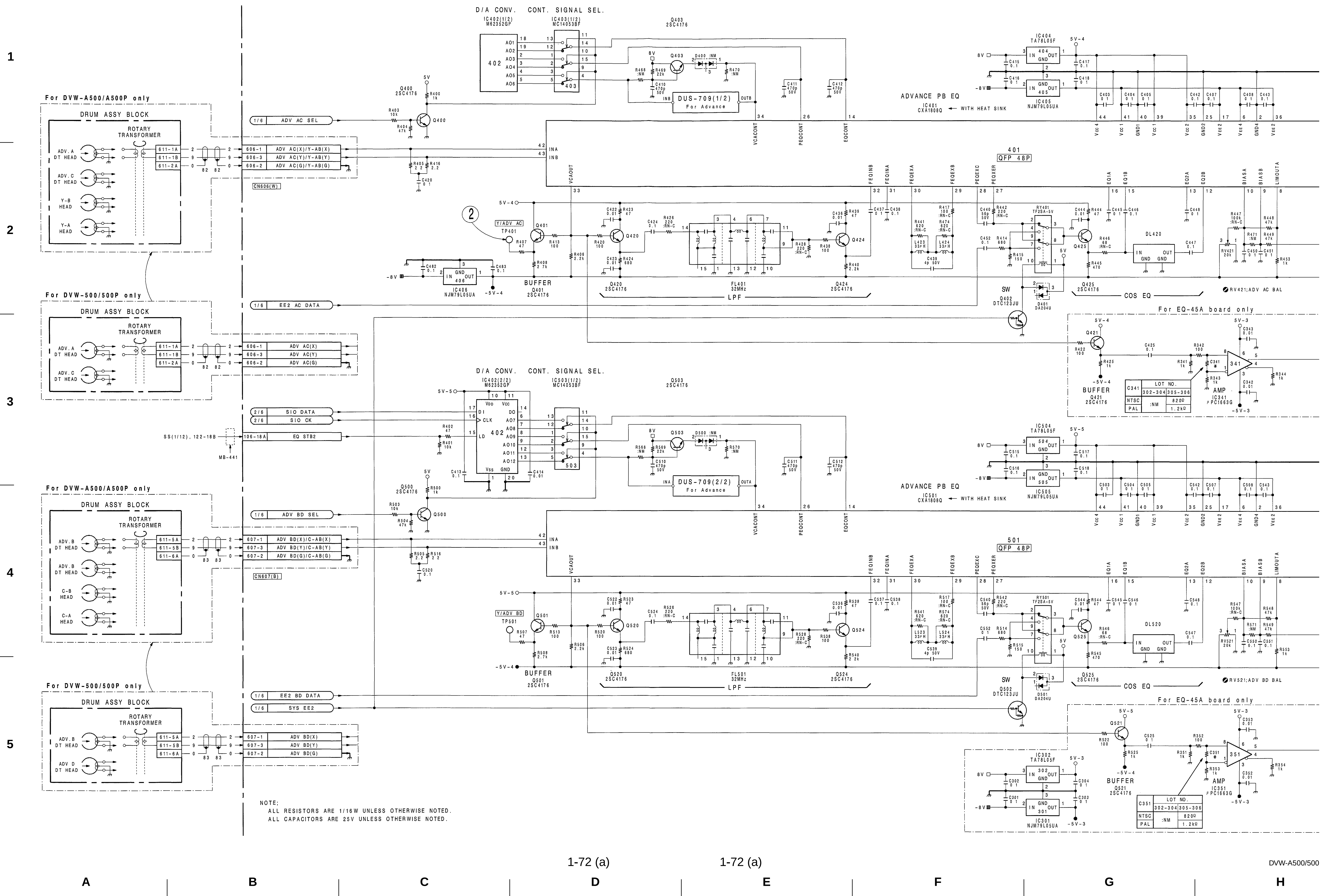

 1-72 (a)

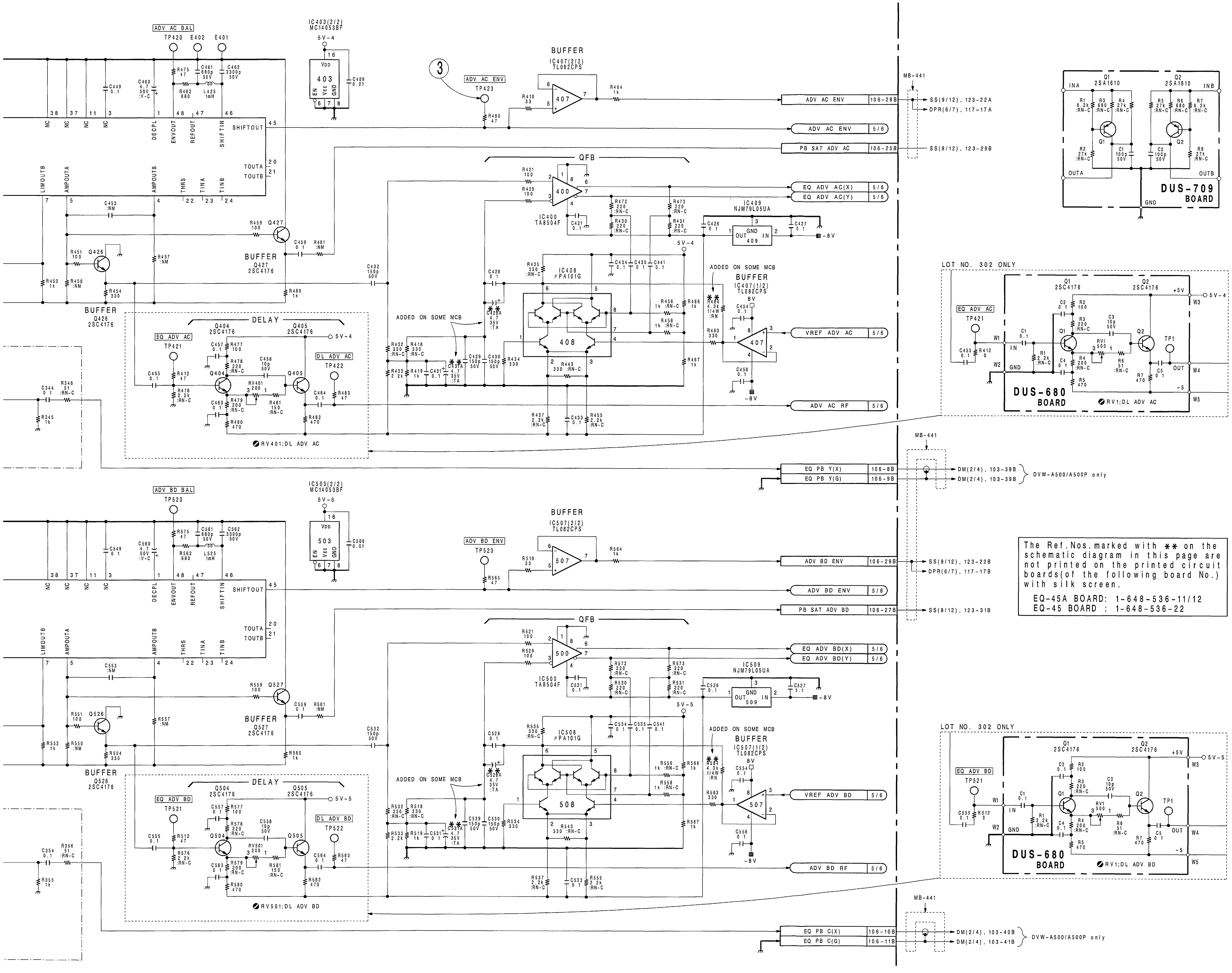

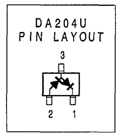

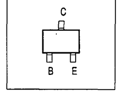

The Ref.Nos.marked with ✱✱ on the schematic diagram in this page are not printed on the printed circuit boards(of the following board No.) with silk screen.

EQ-45A BOARD: 1-648-536-11/12
EQ-45 BOARD : 1-648-536-22

LOT NO.	EQ BOARD NO.
302	1-648-536-11
303-306	1-648-536-12/22

Temperature Compensation

DUS-709 BOARD

BOARD NO. 1-650-293-11

Delay

DUS-680 BOARD

BOARD NO. 1-649-270-11
FOR EQ-45A(1-648-536-11) OF LOT NO. 302
DVW-A500P(EK)

Advanced PB EQ

EQ-45A/45 BOARD (3/6)

BOARD NO. 1-648-539-11, 12/22
BOARD' S LOT NO. 302-306
DVW-A500(J, UC) :EQ-45A MCB
DVW-A500P(EK) :EQ-45AP MCB
DVW-A500P(UC) :EQ-45APG MCB
DVW-500 (J, UC) :EQ-45 MCB
DVW-500P (EK) :EQ-45P MCB

DVW-EQ45-ALL-REC-S/M-04-A

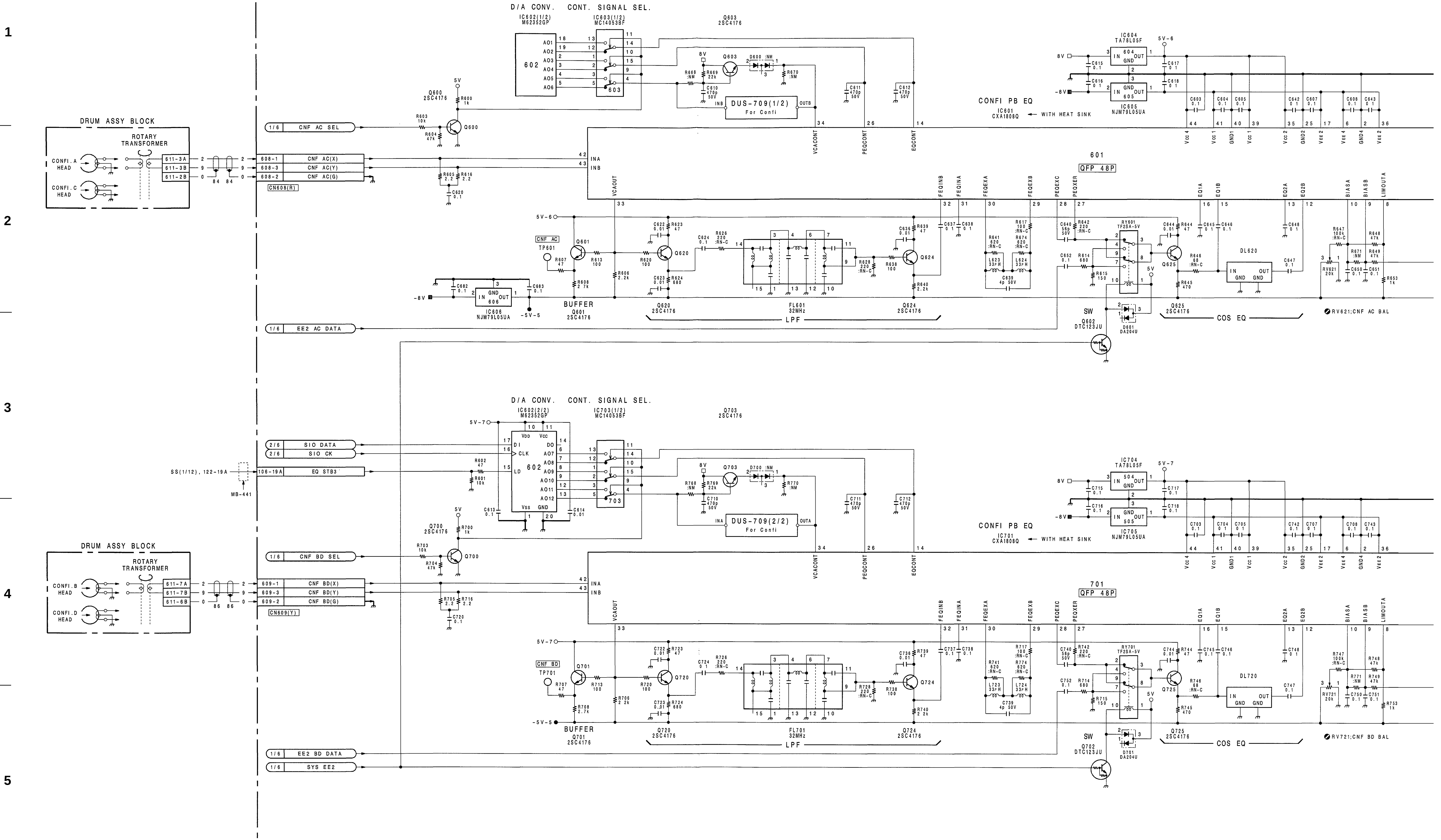

NOTE;
ALL RESISTORS ARE 1/16W UNLESS OTHERWISE NOTED.
ALL CAPACITORS ARE 25V UNLESS OTHERWISE NOTED.

 EQ-45A/45 (4/6)

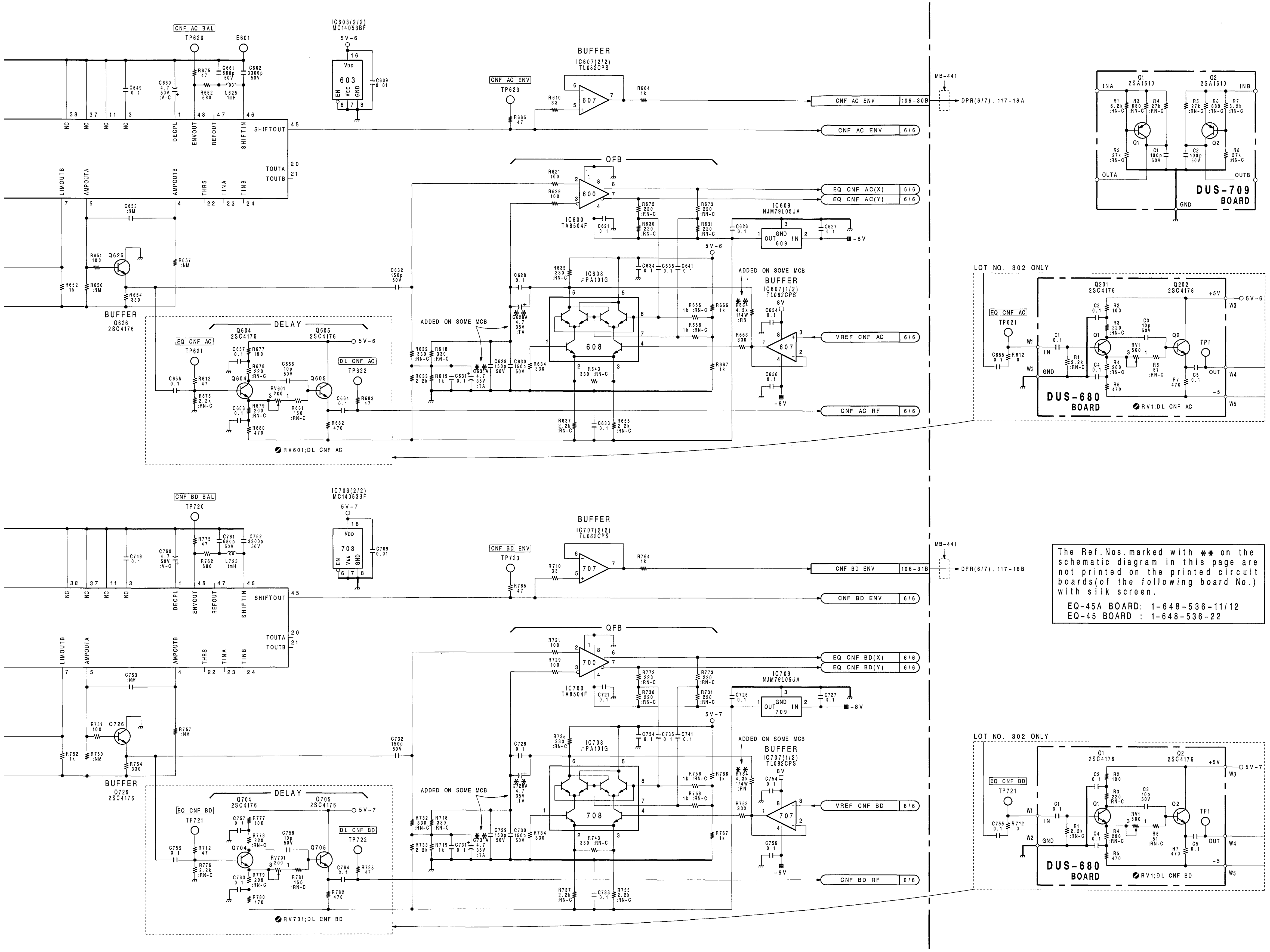

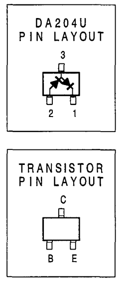

The Ref.Nos.marked with ✱✱ on the schematic diagram in this page are not printed on the printed circuit boards(of the following board No.) with silk screen.

EQ-45A BOARD: 1-648-536-11/12
EQ-45 BOARD : 1-648-536-22

LOT NO.	EQ BOARD NO.
302	1-648-536-11
303-306	1-648-536-12/22

Temperature Compensation
DUS-709 BOARD

BOARD NO. 1-650-293-11

Delay
DUS-680 BOARD

BOARD NO. 1-649-270-11
FOR EQ-45A(1-648-536-11) OF LOT NO. 302
DVW-A500P(EK)

Confi PB EQ
EQ-45A/45 BOARD (4/6)

BOARD NO. 1-648-536-11, 12/22
BOARD'S LOT NO. 302-306
DVW-A500(J, UC) :EQ-45A MCB
DVW-A500P(EK) :EQ-45AP MCB
DVW-A500P(UC) :EQ-45APG MCB
DVW-500 (J, UC) :EQ-45 MCB
DVW-500P (EK) :EQ-45P MCB

DVW-EQ45-ALL-REC-S/M-04-A

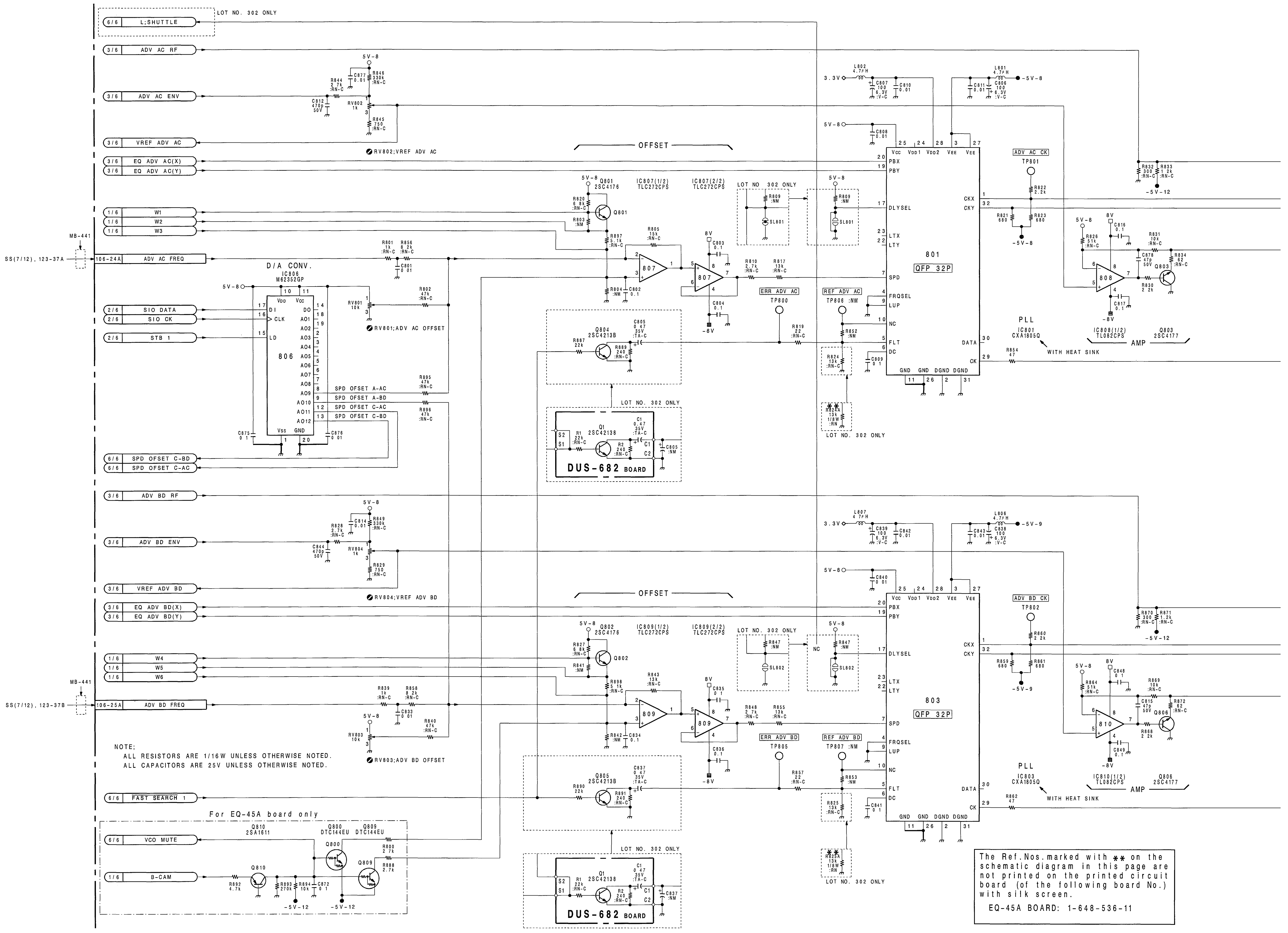
D/A CONV.
OFFSET
LOT NO. 302 ONLY
DUS-682 BOARD
PLL
AMP
WITH HEAT SINK
For EQ-45A board only
NOTE;
ALL RESISTORS ARE 1/16W UNLESS OTHERWISE NOTED.
ALL CAPACITORS ARE 25V UNLESS OTHERWISE NOTED.
The Ref.Nos. marked with ** on the schematic diagram in this page are not printed on the printed circuit board (of the following board No.) with silk screen.
EQ-45A BOARD: 1-648-536-11

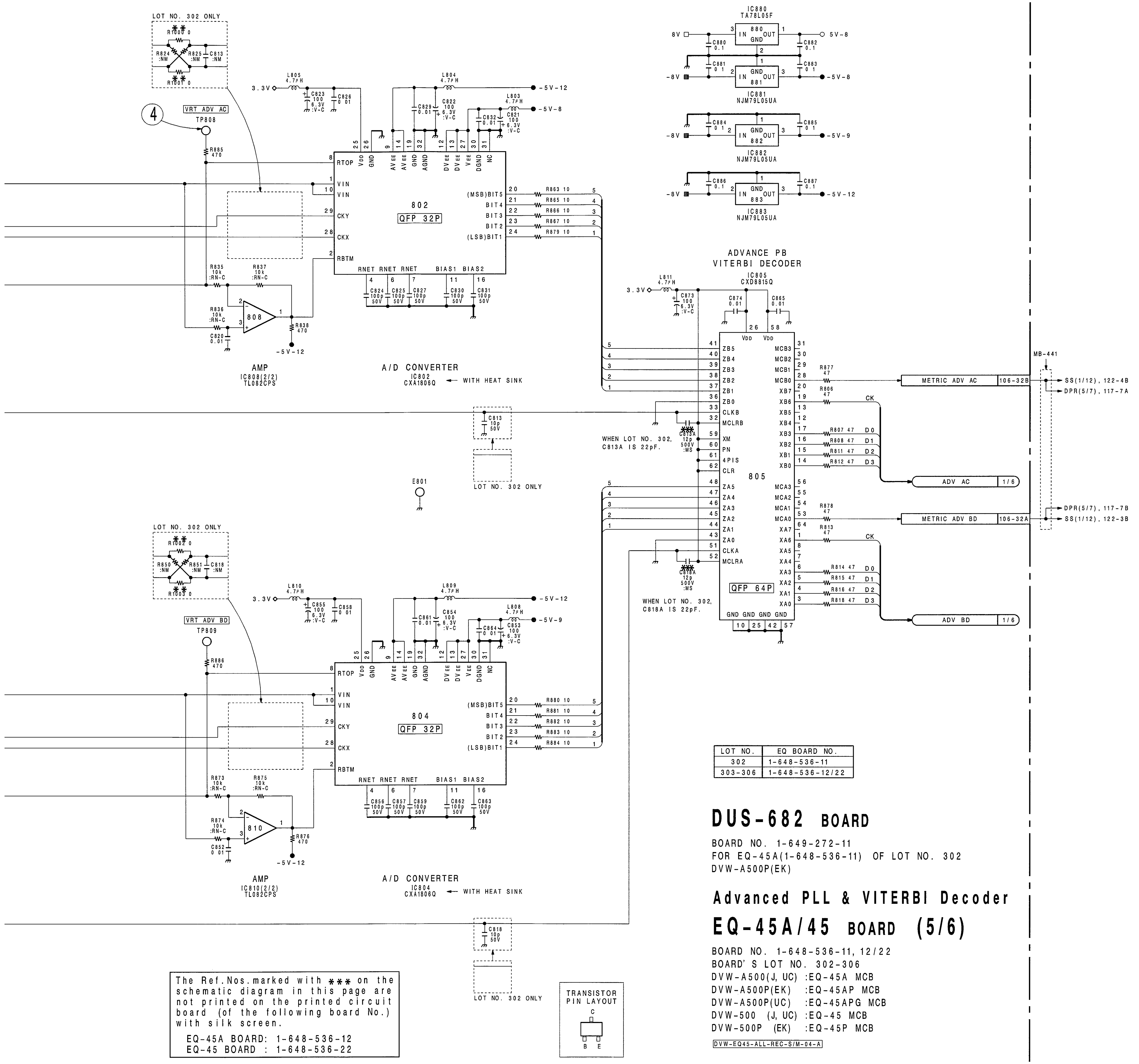

LOT NO.	EQ BOARD NO.
302	1-648-536-11
303-306	1-648-536-12/22

DUS-682 BOARD

BOARD NO. 1-649-272-11
FOR EQ-45A(1-648-536-11) OF LOT NO. 302
DVW-A500P(EK)

Advanced PLL & VITERBI Decoder

EQ-45A/45 BOARD (5/6)

BOARD NO. 1-648-536-11, 12/22
BOARD' S LOT NO. 302-306
DVW-A500(J, UC) :EQ-45A MCB
DVW-A500P(EK) :EQ-45AP MCB
DVW-A500P(UC) :EQ-45APG MCB
DVW-500 (J, UC) :EQ-45 MCB
DVW-500P (EK) :EQ-45P MCB

DVW-EQ45-ALL-REC-S/M-04-A

The Ref.Nos.marked with *** on the schematic diagram in this page are not printed on the printed circuit board (of the following board No.) with silk screen.
EQ-45A BOARD: 1-648-536-12
EQ-45 BOARD : 1-648-536-22

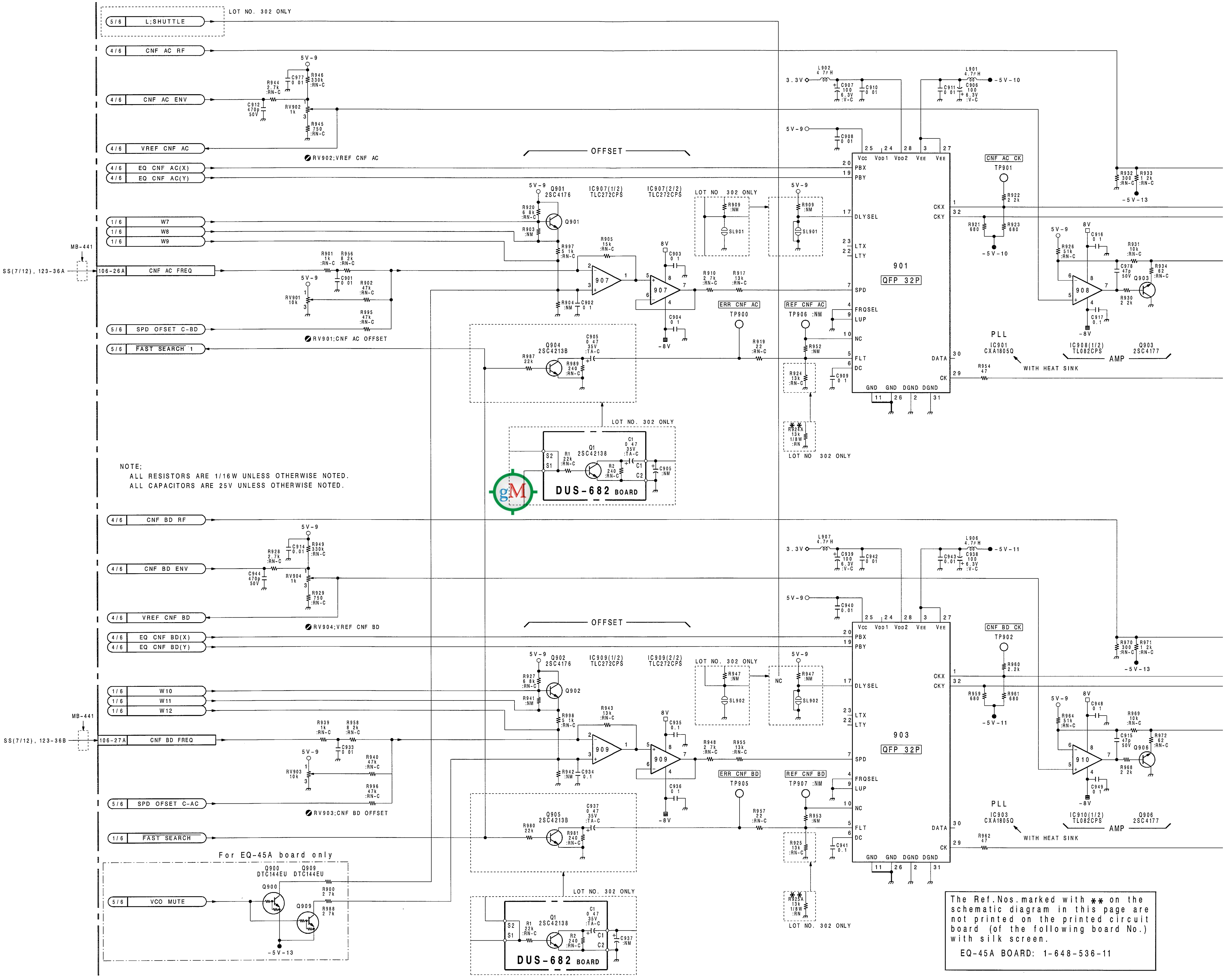
L;SHUTTLE
LOT NO. 302 ONLY
CNF AC RF
CNF AC ENV
VREF CNF AC
RV902;VREF CNF AC
OFFSET
EQ CNF AC(X)
EQ CNF AC(Y)
W7
W8
W9
CNF AC FREQ
SPD OFSET C-BD
RV901;CNF AC OFFSET
FAST SEARCH 1
NOTE;
ALL RESISTORS ARE 1/16W UNLESS OTHERWISE NOTED.
ALL CAPACITORS ARE 25V UNLESS OTHERWISE NOTED.
DUS-682 BOARD
901
QFP 32P
PLL
IC901
CXA1805Q
WITH HEAT SINK
AMP
CNF BD RF
CNF BD ENV
VREF CNF BD
RV904;VREF CNF BD
EQ CNF BD(X)
EQ CNF BD(Y)
W10
W11
W12
CNF BD FREQ
SPD OFSET C-AC
RV903;CNF BD OFFSET
FAST SEARCH
For EQ-45A board only
VCO MUTE
903
QFP 32P
IC903
CXA1805Q
The Ref.Nos.marked with ** on the schematic diagram in this page are not printed on the printed circuit board (of the following board No.) with silk screen.
EQ-45A BOARD: 1-648-536-11

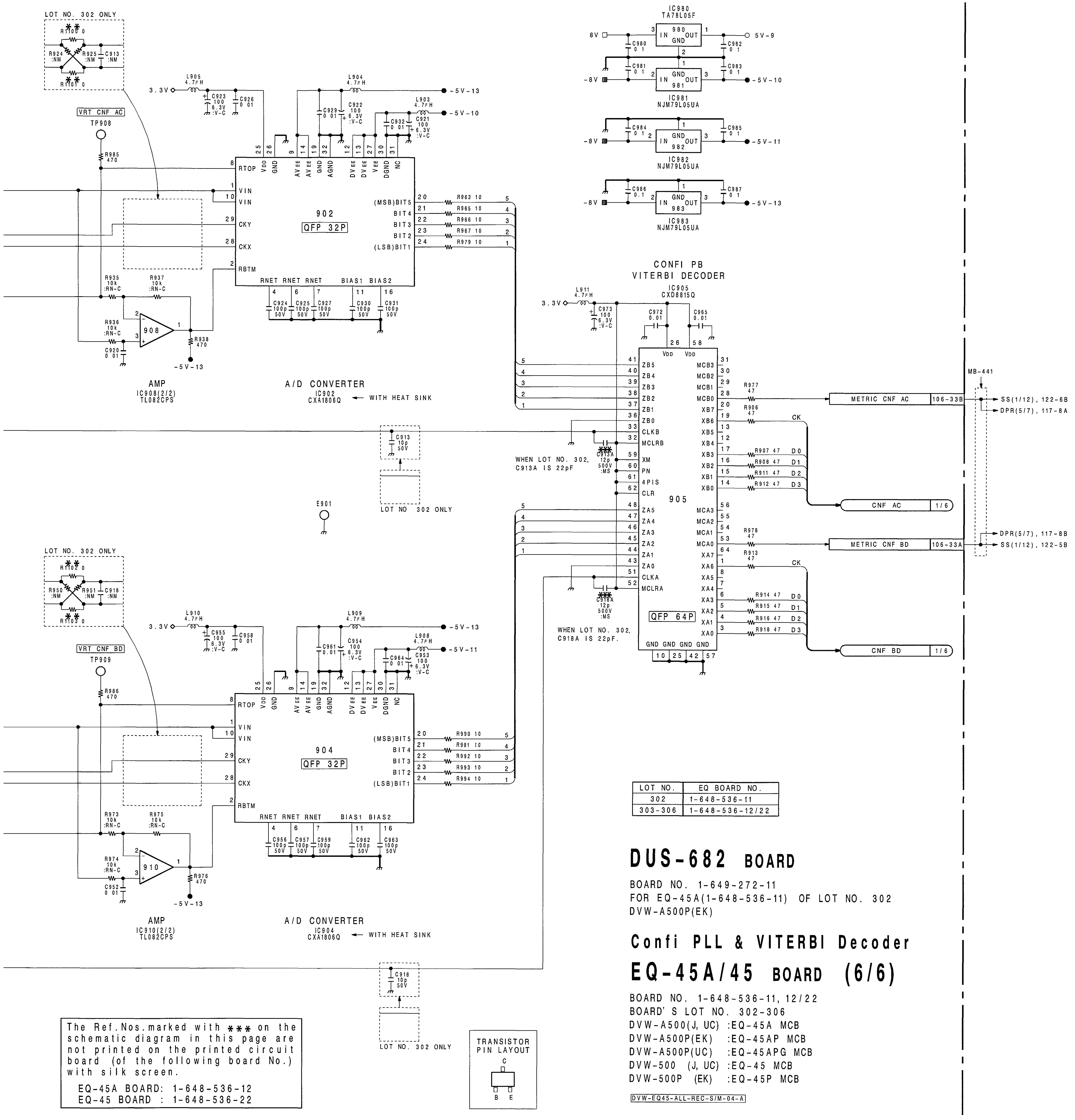

LOT NO.	EQ BOARD NO.
302	1-648-536-11
303-306	1-648-536-12/22

DUS-682 BOARD

BOARD NO. 1-649-272-11
FOR EQ-45A(1-648-536-11) OF LOT NO. 302
DVW-A500P(EK)

Confi PLL & VITERBI Decoder

EQ-45A/45 BOARD (6/6)

BOARD NO. 1-648-536-11, 12/22
BOARD' S LOT NO. 302-306
DVW-A500(J, UC) :EQ-45A MCB
DVW-A500P(EK) :EQ-45AP MCB
DVW-A500P(UC) :EQ-45APG MCB
DVW-500 (J, UC) :EQ-45 MCB
DVW-500P (EK) :EQ-45P MCB

DVW-EQ45-ALL-REC-S/M-04-A

The Ref.Nos.marked with *** on the schematic diagram in this page are not printed on the printed circuit board (of the following board No.) with silk screen.

EQ-45A BOARD: 1-648-536-12
EQ-45 BOARD : 1-648-536-22

 CUE-1A/1 (1/4)

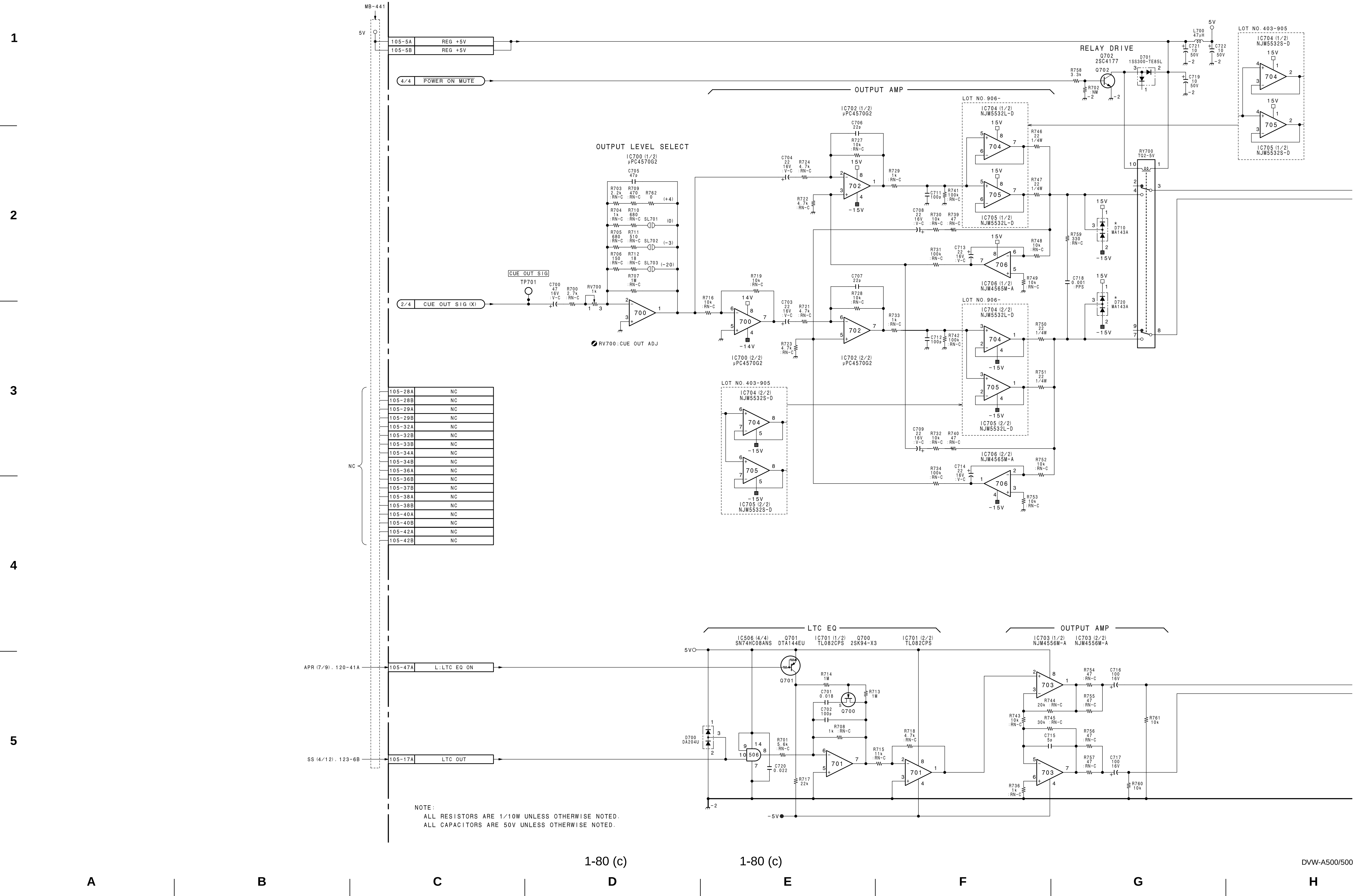
MB-441
5V
105-5A REG +5V
105-5B REG +5V
4/4 POWER ON MUTE
2/4 CUE OUT SIG (X)
CUE OUT SIG
TP701
OUTPUT LEVEL SELECT
IC700 (1/2) μPC4570G2
IC700 (2/2) μPC4570G2
RV700:CUE OUT ADJ
OUTPUT AMP
IC702 (1/2) μPC4570G2
IC702 (2/2) μPC4570G2
LOT NO.906-
IC704 (1/2) NJM5532L-D
IC705 (1/2) NJM5532L-D
IC704 (2/2) NJM5532L-D
IC705 (2/2) NJM5532L-D
IC706 (1/2) NJM4565M-A
IC706 (2/2) NJM4565M-A
LOT NO.403-905
IC704 (1/2) NJM5532S-D
IC705 (1/2) NJM5532S-D
IC704 (2/2) NJM5532S-D
IC705 (2/2) NJM5532S-D
RELAY DRIVE
Q702 2SC4177
D701 1SS300-TE85L
RY700 TQ2-5V
D710 MA143A
D720 MA143A
NC
105-28A NC
105-28B NC
105-29A NC
105-29B NC
105-32A NC
105-32B NC
105-33B NC
105-34A NC
105-34B NC
105-36A NC
105-36B NC
105-37B NC
105-38A NC
105-38B NC
105-40A NC
105-40B NC
105-42A NC
105-42B NC
APR (7/9).120-41A
105-47A L:LTC EQ ON
SS (4/12).123-6B
105-17A LTC OUT
LTC EQ
IC506 (4/4) SN74HC08ANS
Q701 DTA144EU
IC701 (1/2) TL082CPS
Q700 2SK94-X3
IC701 (2/2) TL082CPS
D700 DA204U
OUTPUT AMP
IC703 (1/2) NJM4556M-A
IC703 (2/2) NJM4556M-A
NOTE:
ALL RESISTORS ARE 1/10W UNLESS OTHERWISE NOTED.
ALL CAPACITORS ARE 50V UNLESS OTHERWISE NOTED.

 CUE-1A/1 (1/4)

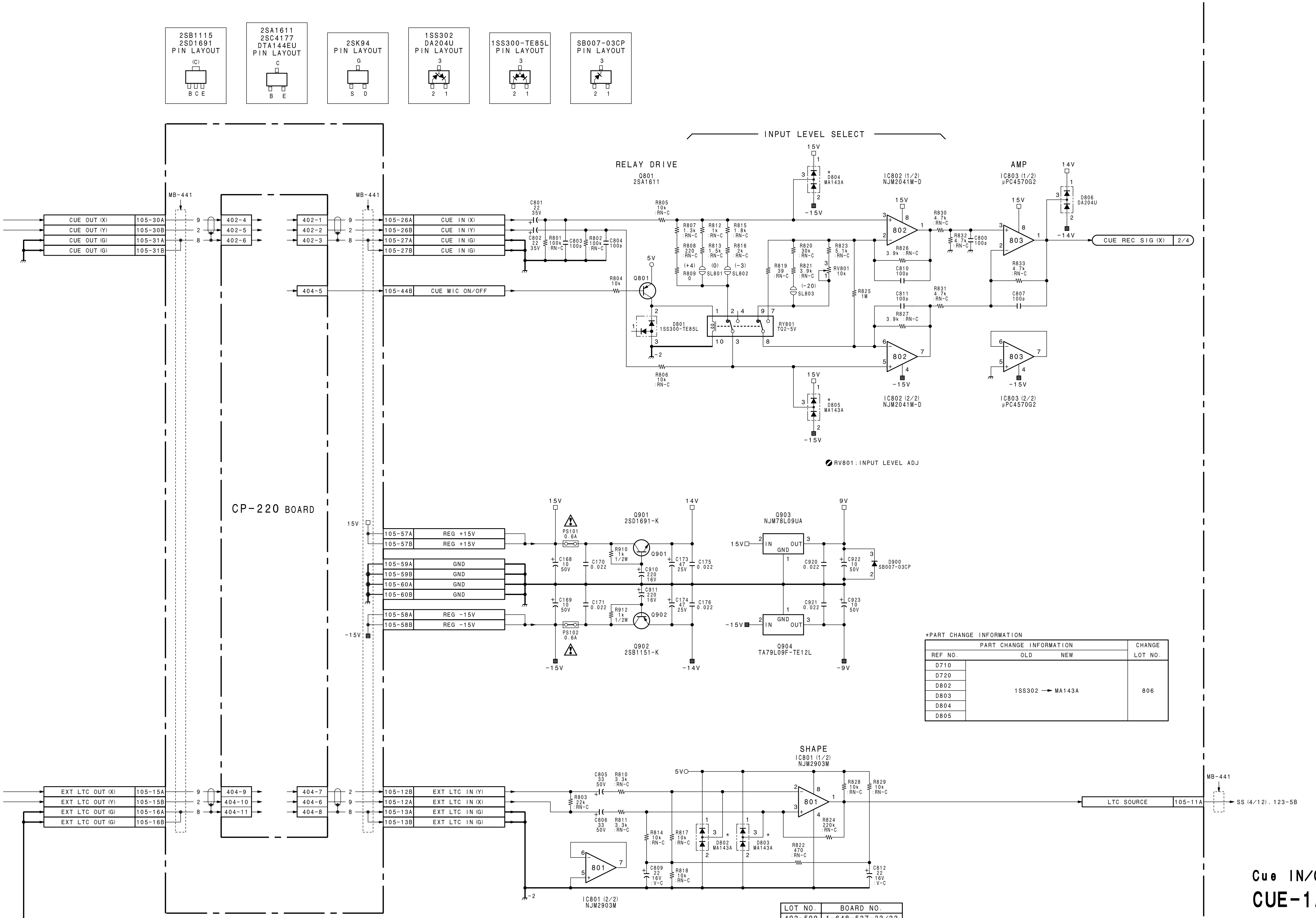

*PART CHANGE INFORMATION

PART CHANGE INFORMATION		CHANGE
REF NO.	OLD NEW	LOT NO.
D710	1SS302 → MA143A	806
D720		
D802		
D803		
D804		
D805		

LOT NO.	BOARD NO.
403-509	1-648-537-23/33
510-	1-648-537-24/34

Cue IN/OUT, LTC IN/OUT

CUE-1A/1 BOARD (1/4)

BOARD NO. 1-648-537-23, 24/33, 34
BOARD'S LOT NO. 403-
DVW-A500 (J, UC) : CUE-1A MCB
DVW-500 (J, UC) : CUE-1 MCB

DVW-CUE1-NTSC-REC-S/M-04-C

1 2 3 4 5

 1-81 (c)

I J K L M N O P

CUE-1A/1 (2/4)

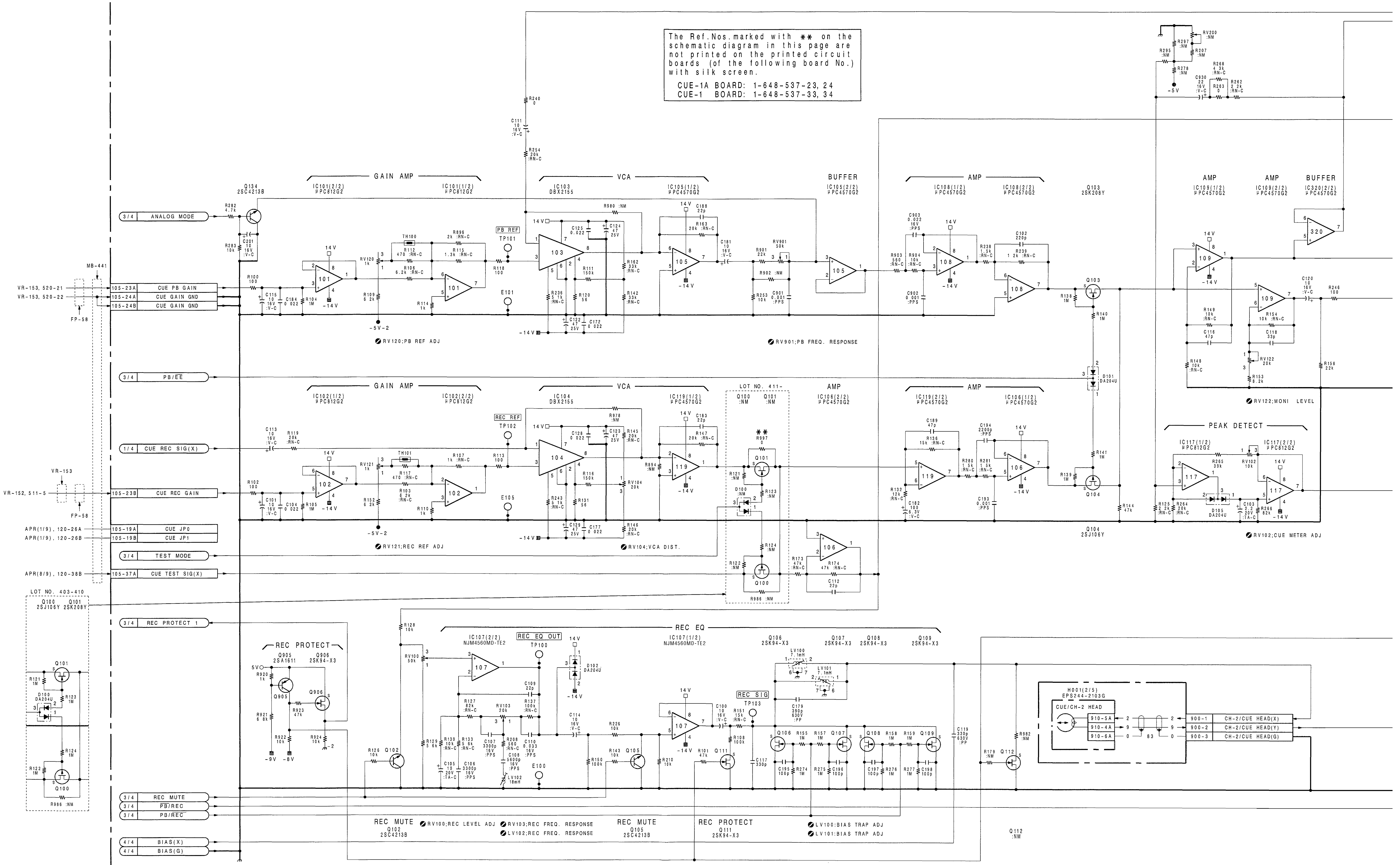

NOTE:
ALL RESISTORS ARE 1/10W UNLESS OTHERWISE NOTED.
ALL CAPACITORS ARE 50V UNLESS OTHERWISE NOTED

1-82 (c)

http://getMANUAL.com

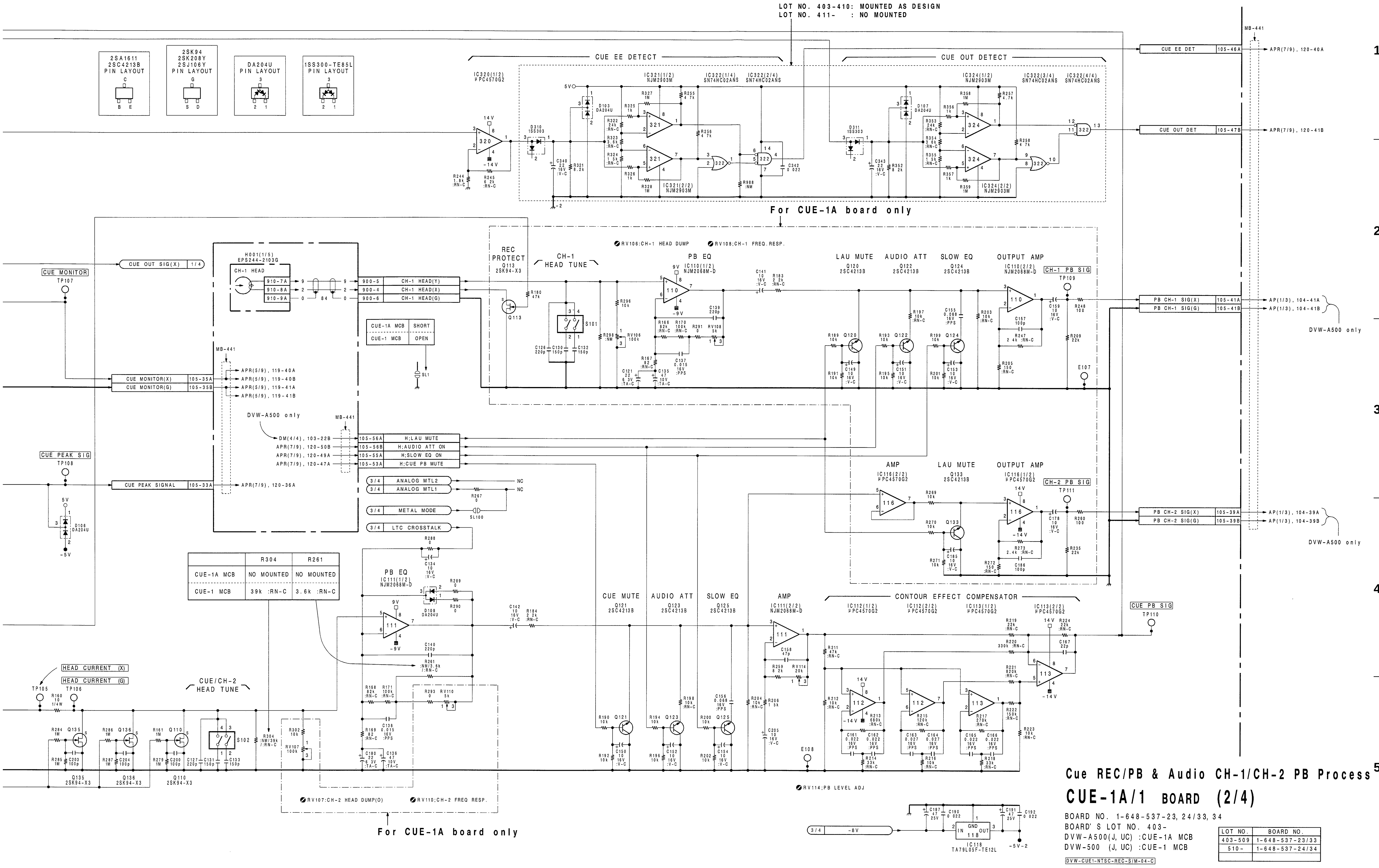

	R304	R261
CUE-1A MCB	NO MOUNTED	NO MOUNTED
CUE-1 MCB	39k :RN-C	3.6k :RN-C

CUE-1A MCB	SHORT
CUE-1 MCB	OPEN

Cue REC/PB & Audio CH-1/CH-2 PB Process
CUE-1A/1 BOARD (2/4)

BOARD NO. 1-648-537-23, 24/33, 34
BOARD'S LOT NO. 403-
DVW-A500(J, UC) :CUE-1A MCB
DVW-500 (J, UC) :CUE-1 MCB

LOT NO.	BOARD NO.
403-509	1-648-537-23/33
510-	1-648-537-24/34

DVW-CUE1-NTSC-REC-S/M-04-C

CUE-1A/1 (3/4)

1
2
3
4
5

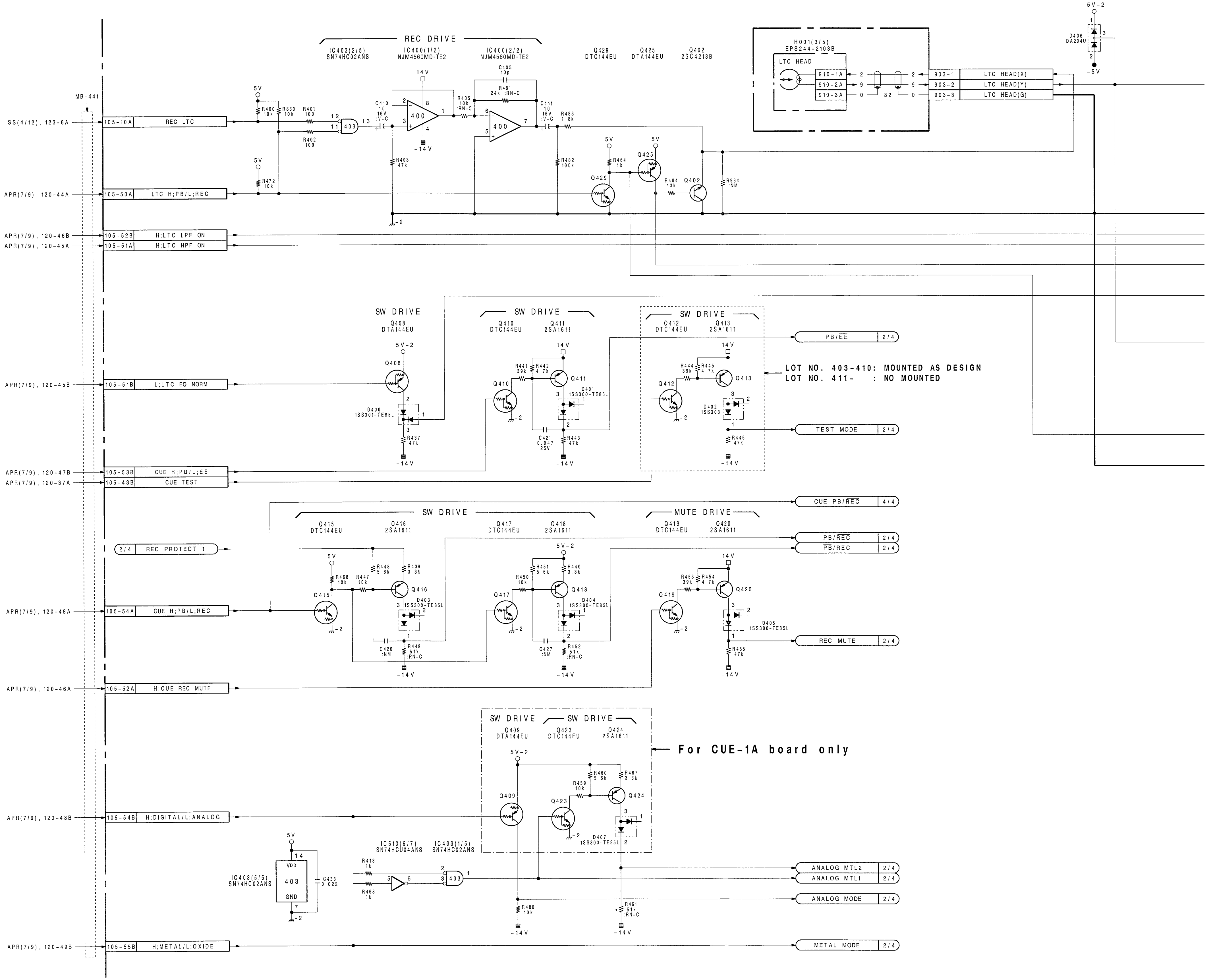

1-84 (c)

A B C D E F G H

 CUE-1A/1 (3/4)

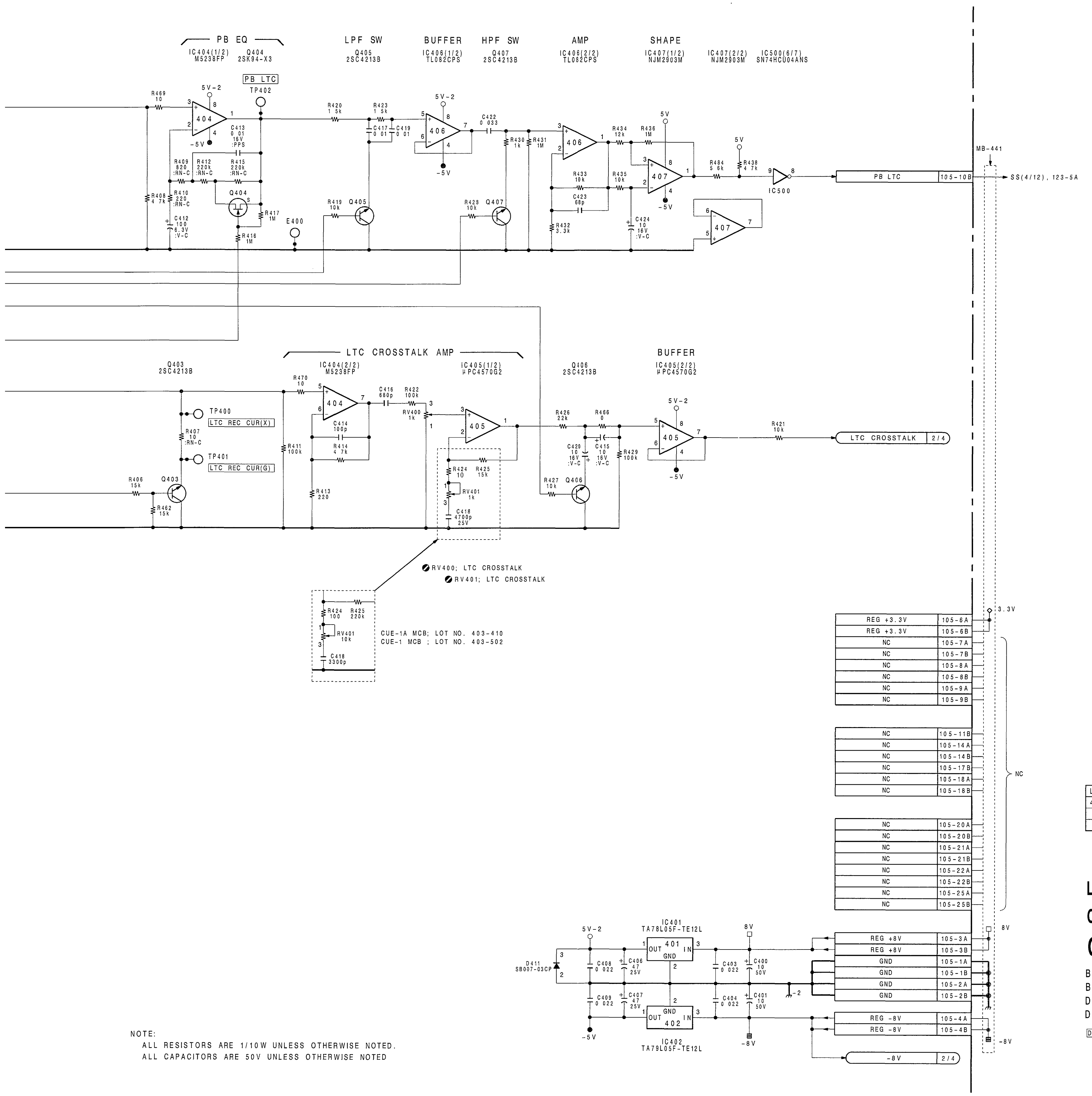

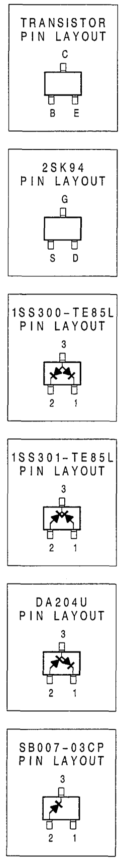

LOT NO.	BOARD NO.
403-509	1-648-537-23/33
510-	1-648-537-24/34

LTC REC/PB Process & Control Circuit

CUE-1A/1 BOARD (3/4)

BOARD NO. 1-648-537-23, 24/33, 34
BOARD' S LOT NO. 403-
DVW-A500(J, UC) :CUE-1A MCB
DVW-500 (J, UC) :CUE-1 MCB

DVW-CUE1-NTSC-REC-S/M-04-C

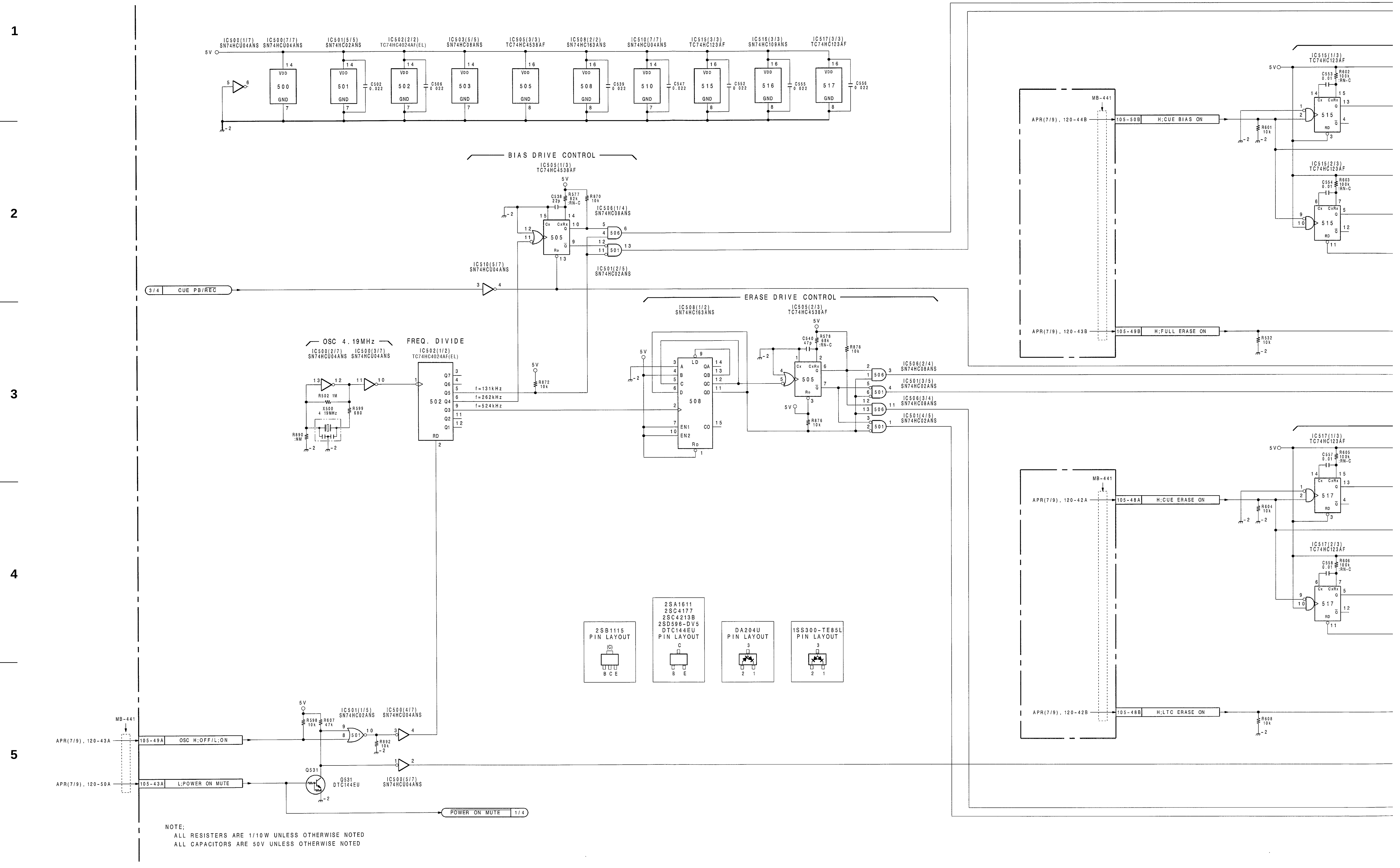

1
2
3
4
5
BIAS DRIVE CONTROL
IC505(1/3) TC74HC4538AF
IC506(1/4) SN74HC08ANS
IC501(2/5) SN74HC02ANS
IC510(5/7) SN74HCU04ANS
CUE PB/REC
ERASE DRIVE CONTROL
IC508(1/2) SN74HC163ANS
IC505(2/3) TC74HC4538AF
IC506(2/4) SN74HC08ANS
IC501(3/5) SN74HC02ANS
IC506(3/4) SN74HC08ANS
IC501(4/5) SN74HC02ANS
OSC 4.19MHz
IC500(2/7) SN74HCU04ANS
IC500(3/7) SN74HCU04ANS
FREQ. DIVIDE
IC502(1/2) TC74HC4024AF(EL)
f=131kHz
f=262kHz
f=524kHz
X500 4.19MHz
MB-441
APR(7/9), 120-44B
105-50B
H;CUE BIAS ON
APR(7/9), 120-43B
105-49B
H;FULL ERASE ON
IC515(1/3) TC74HC123AF
IC515(2/3) TC74HC123AF
APR(7/9), 120-42A
105-48A
H;CUE ERASE ON
APR(7/9), 120-42B
105-48B
H;LTC ERASE ON
IC517(1/3) TC74HC123AF
IC517(2/3) TC74HC123AF
2SB1115 PIN LAYOUT
2SA1611 2SC4177 2SC4213B 2SD596-DV5 DTC144EU PIN LAYOUT
DA204U PIN LAYOUT
1SS300-TE85L PIN LAYOUT
IC501(1/5) SN74HC02ANS
IC500(4/7) SN74HCU04ANS
IC500(5/7) SN74HCU04ANS
Q531 DTC144EU
APR(7/9), 120-43A
105-49A
OSC H;OFF/L;ON
APR(7/9), 120-50A
105-43A
L;POWER ON MUTE
POWER ON MUTE
NOTE;
ALL RESISTERS ARE 1/10W UNLESS OTHERWISE NOTED
ALL CAPACITORS ARE 50V UNLESS OTHERWISE NOTED

 CUE-1A/1 (4/4)

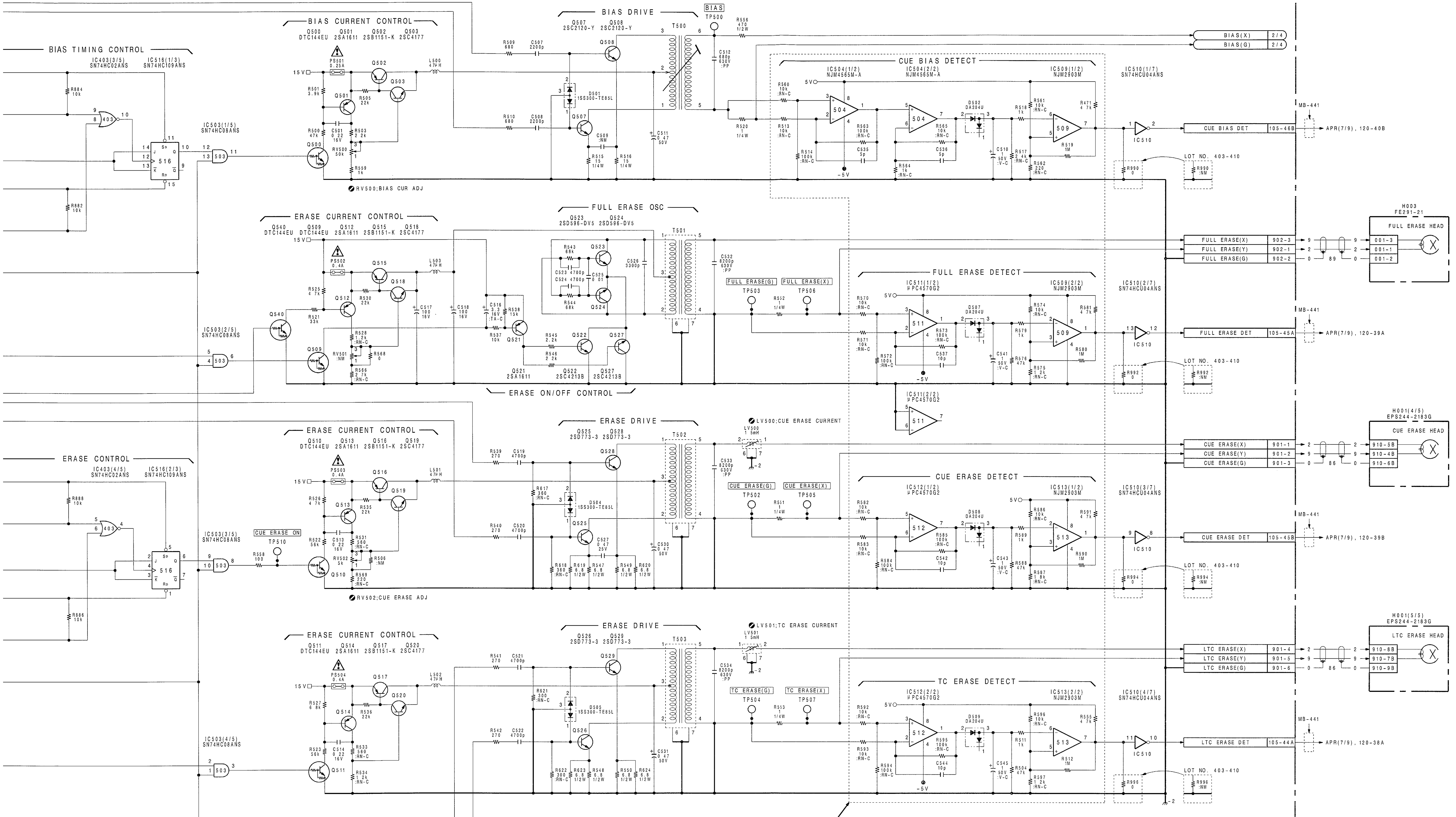

Bias OSC & FULL/CUE/LTC Erase Circuit

CUE-1A/1 BOARD (4/4)

BOARD NO. 1-648-537-23, 24/33, 34
BOARD' S LOT NO. 403-
DVW-A500(J, UC) :CUE-1A MCB
DVW-500 (J, UC) :CUE-1 MCB

LOT NO.	BOARD NO.
403-509	1-648-537-23/33
510-	1-648-537-24/34

DVW-CUE1-NTSC-REC-S/M-04-C

 CUE-1A/1 (1/4)

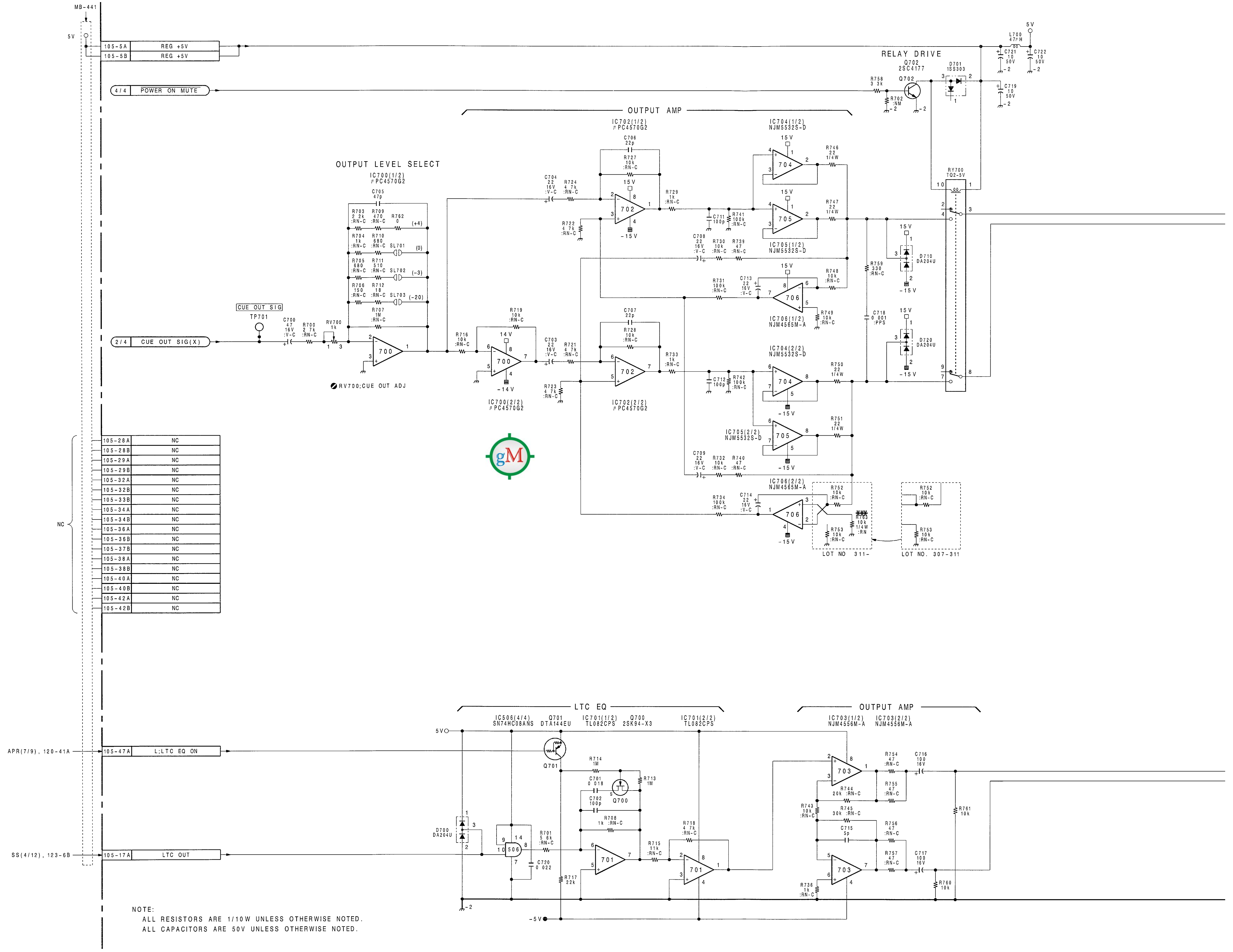
MB-441
5V
105-5A REG +5V
105-5B REG +5V
4/4 POWER ON MUTE
RELAY DRIVE
OUTPUT AMP
OUTPUT LEVEL SELECT
IC700(1/2) μPC4570G2
IC702(1/2) μPC4570G2
IC704(1/2) NJM5532S-D
IC705(1/2) NJM5532S-D
IC706(1/2) NJM4565M-A
IC704(2/2) NJM5532S-D
IC705(2/2) NJM5532S-D
IC706(2/2) NJM4565M-A
IC700(2/2) μPC4570G2
IC702(2/2) μPC4570G2
CUE OUT SIG
TP701
2/4 CUE OUT SIG(X)
RV700;CUE OUT ADJ
RY700 TQ2-5V
Q702 2SC4177
D701 1SS303
D710 DA204U
D720 DA204U
LOT NO 311-
LOT NO. 307-311
NC
105-28A NC
105-28B NC
105-29A NC
105-29B NC
105-32A NC
105-32B NC
105-33A NC
105-33B NC
105-34A NC
105-34B NC
105-36A NC
105-36B NC
105-37B NC
105-38A NC
105-38B NC
105-40A NC
105-40B NC
105-42A NC
105-42B NC
LTC EQ
IC506(4/4) SN74HC08ANS
Q701 DTA144EU
IC701(1/2) TL082CPS
Q700 2SK94-X3
IC701(2/2) TL082CPS
IC703(1/2) NJM4556M-A
IC703(2/2) NJM4556M-A
APR(7/9), 120-41A
105-47A L;LTC EQ ON
SS(4/12), 123-6B
105-17A LTC OUT
D700 DA204U
NOTE:
ALL RESISTORS ARE 1/10W UNLESS OTHERWISE NOTED.
ALL CAPACITORS ARE 50V UNLESS OTHERWISE NOTED.

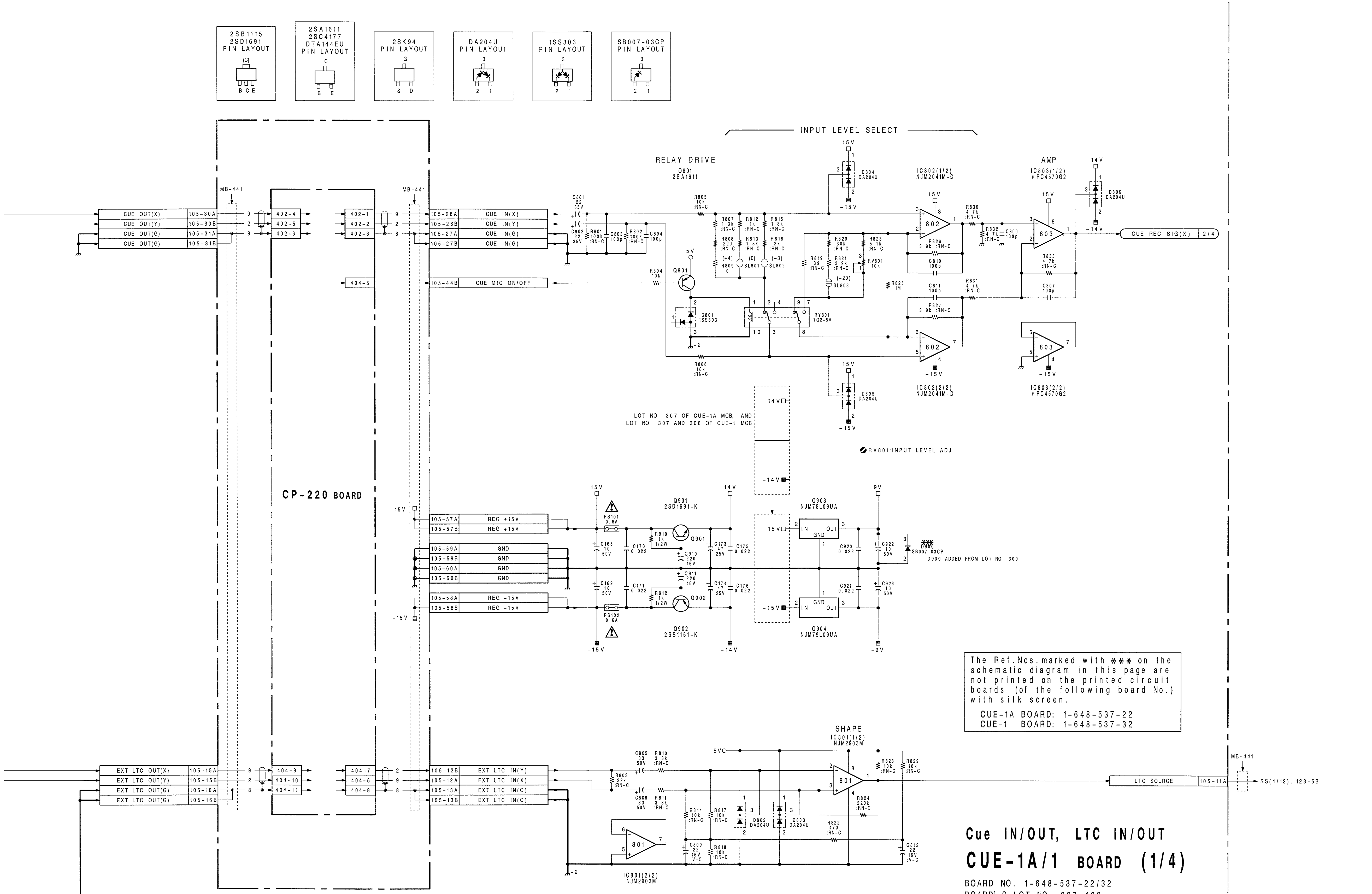

The Ref.Nos.marked with ✱✱✱ on the schematic diagram in this page are not printed on the printed circuit boards (of the following board No.) with silk screen.

CUE-1A BOARD: 1-648-537-22
CUE-1 BOARD: 1-648-537-32

Cue IN/OUT, LTC IN/OUT

CUE-1A/1 BOARD (1/4)

BOARD NO. 1-648-537-22/32
BOARD' S LOT NO. 307-402
DVW-A500(J, UC) :CUE-1A MCB
DVW-500 (J, UC) :CUE-1 MCB

DVW-CUE1-NTSC-REC-S/M-03-B

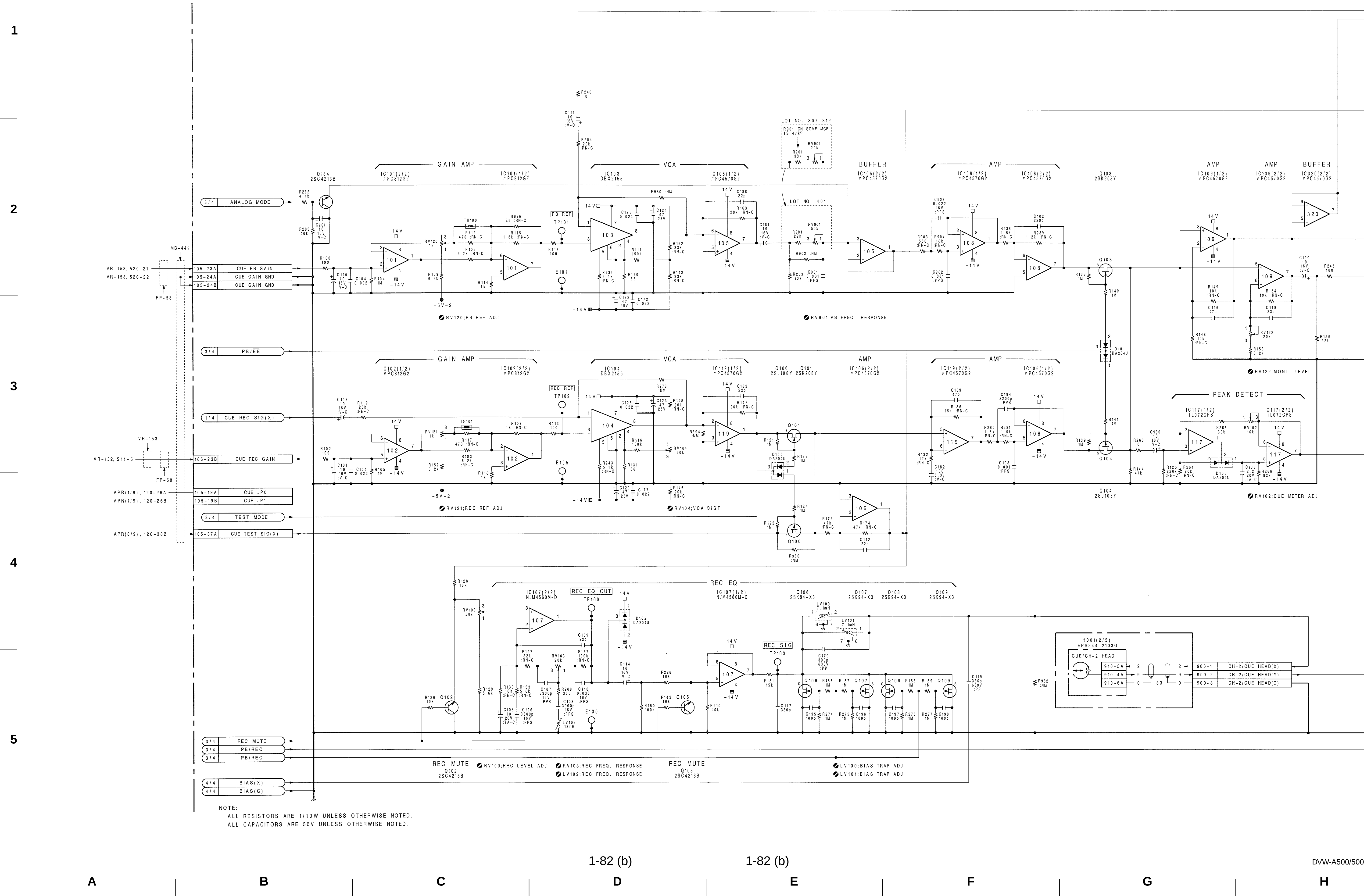

NOTE:
ALL RESISTORS ARE 1/10W UNLESS OTHERWISE NOTED.
ALL CAPACITORS ARE 50V UNLESS OTHERWISE NOTED.

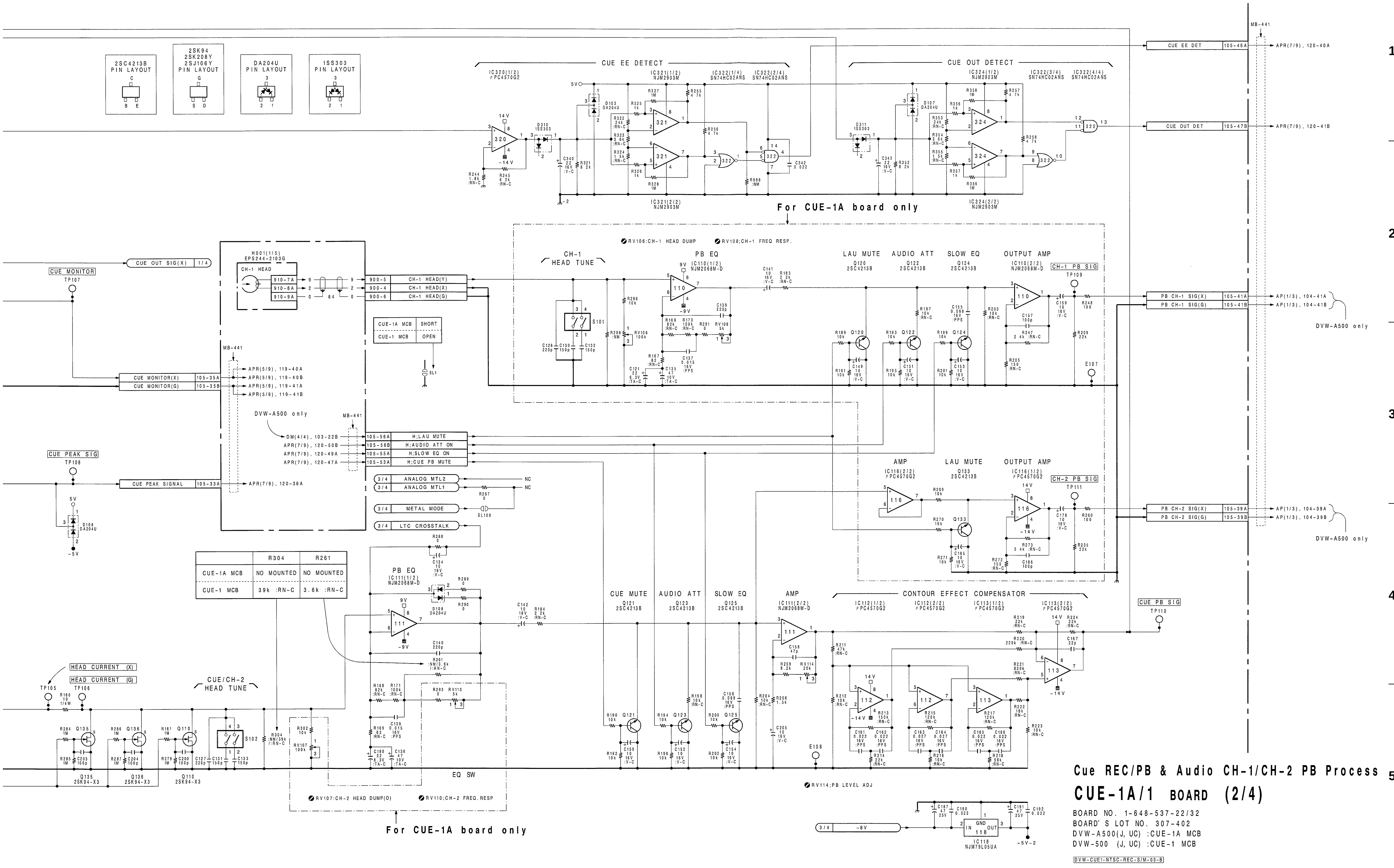

Cue REC/PB & Audio CH-1/CH-2 PB Process

CUE-1A/1 BOARD (2/4)

BOARD NO. 1-648-537-22/32
BOARD'S LOT NO. 307-402
DVW-A500(J, UC) :CUE-1A MCB
DVW-500 (J, UC) :CUE-1 MCB

DVW-CUE1-NTSC-REC-S/M-03-B

I J K L M N O P

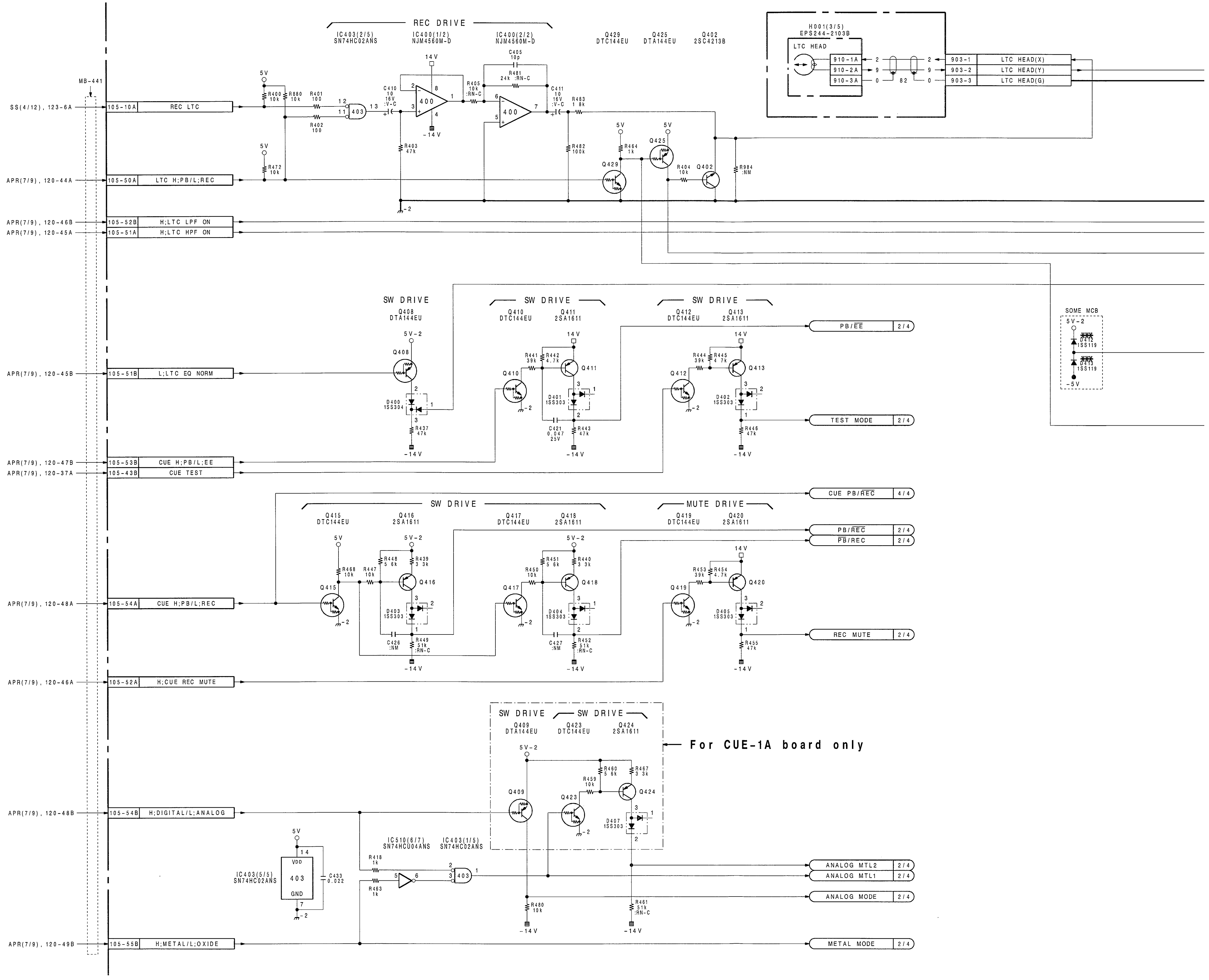
REC DRIVE
SW DRIVE
MUTE DRIVE
For CUE-1A board only
LTC HEAD
H001(3/5)
EPS244-2103B
REC LTC
LTC H;PB/L;REC
H;LTC LPF ON
H;LTC HPF ON
L;LTC EQ NORM
CUE H;PB/L;EE
CUE TEST
CUE H;PB/L;REC
H;CUE REC MUTE
H;DIGITAL/L;ANALOG
H;METAL/L;OXIDE
PB/EE
TEST MODE
CUE PB/REC
PB/REC
REC MUTE
ANALOG MTL2
ANALOG MTL1
ANALOG MODE
METAL MODE
LTC HEAD(X)
LTC HEAD(Y)
LTC HEAD(G)
SOME MCB
MB-441

http://getMANUAL.com
 CUE-1A/1 (3/4)

1

2

3

4

5

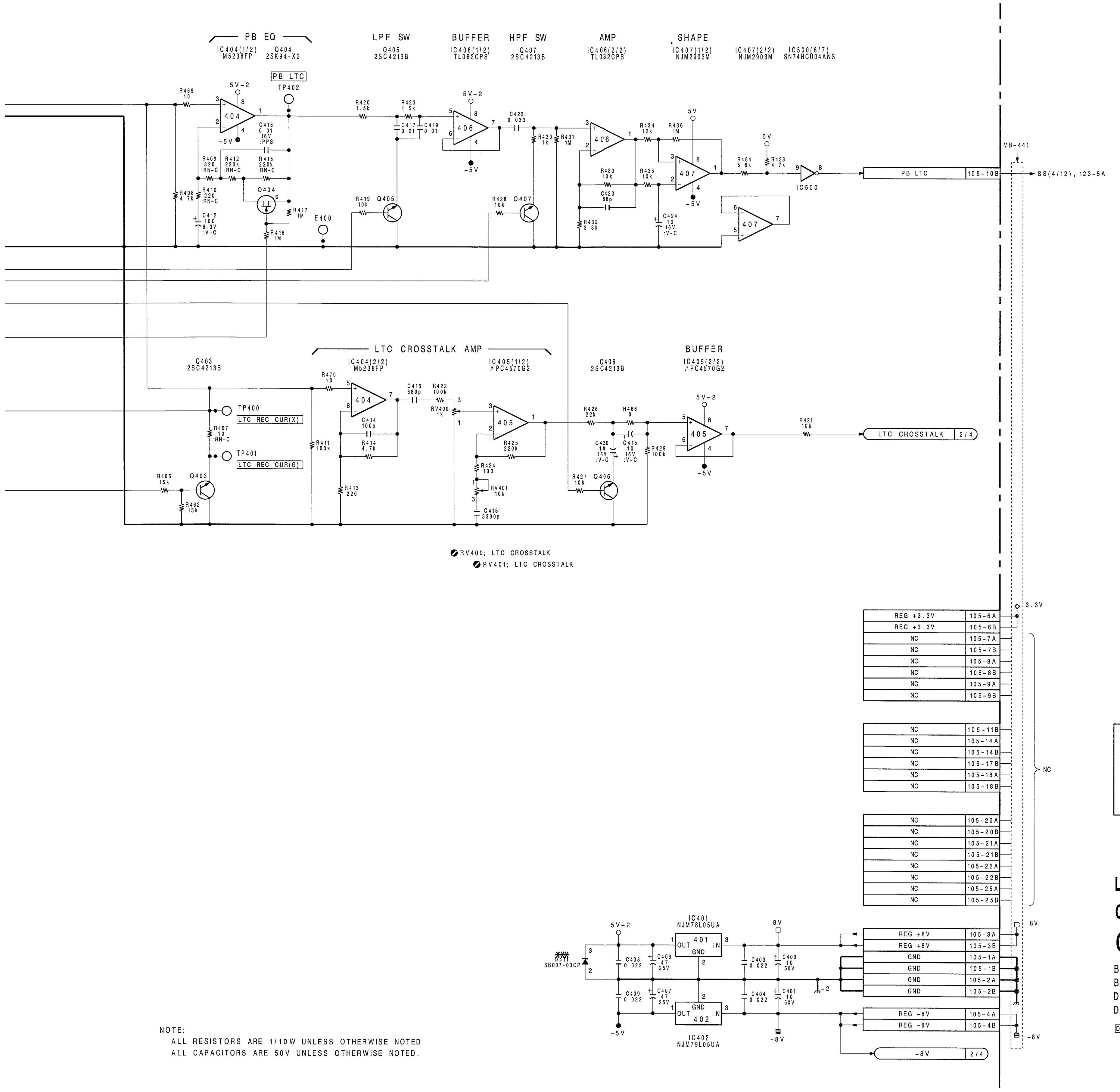

NOTE:
ALL RESISTORS ARE 1/10W UNLESS OTHERWISE NOTED
ALL CAPACITORS ARE 50V UNLESS OTHERWISE NOTED.

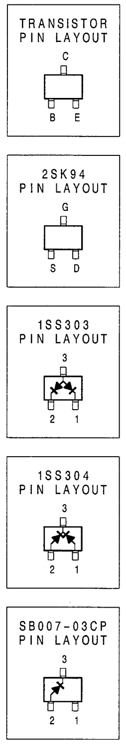

The Ref.Nos.marked with ✱✱✱ on the schematic diagram in this page are not printed on the printed circuit boards (of the following board No.) with silk screen.

CUE-1A BOARD: 1-648-537-22
CUE-1 BOARD: 1-648-537-32

LTC REC/PB Process & Control Circuit

CUE-1A/1 BOARD (3/4)

BOARD NO. 1-648-537-22/32
BOARD'S LOT NO. 307-402
DVW-A500(J, UC) :CUE-1A MCB
DVW-500 (J, UC) :CUE-1 MCB

DVW-CUE1-NTSC-REC-S/M-03-B

 1-85 (b)

I J K L M N O P

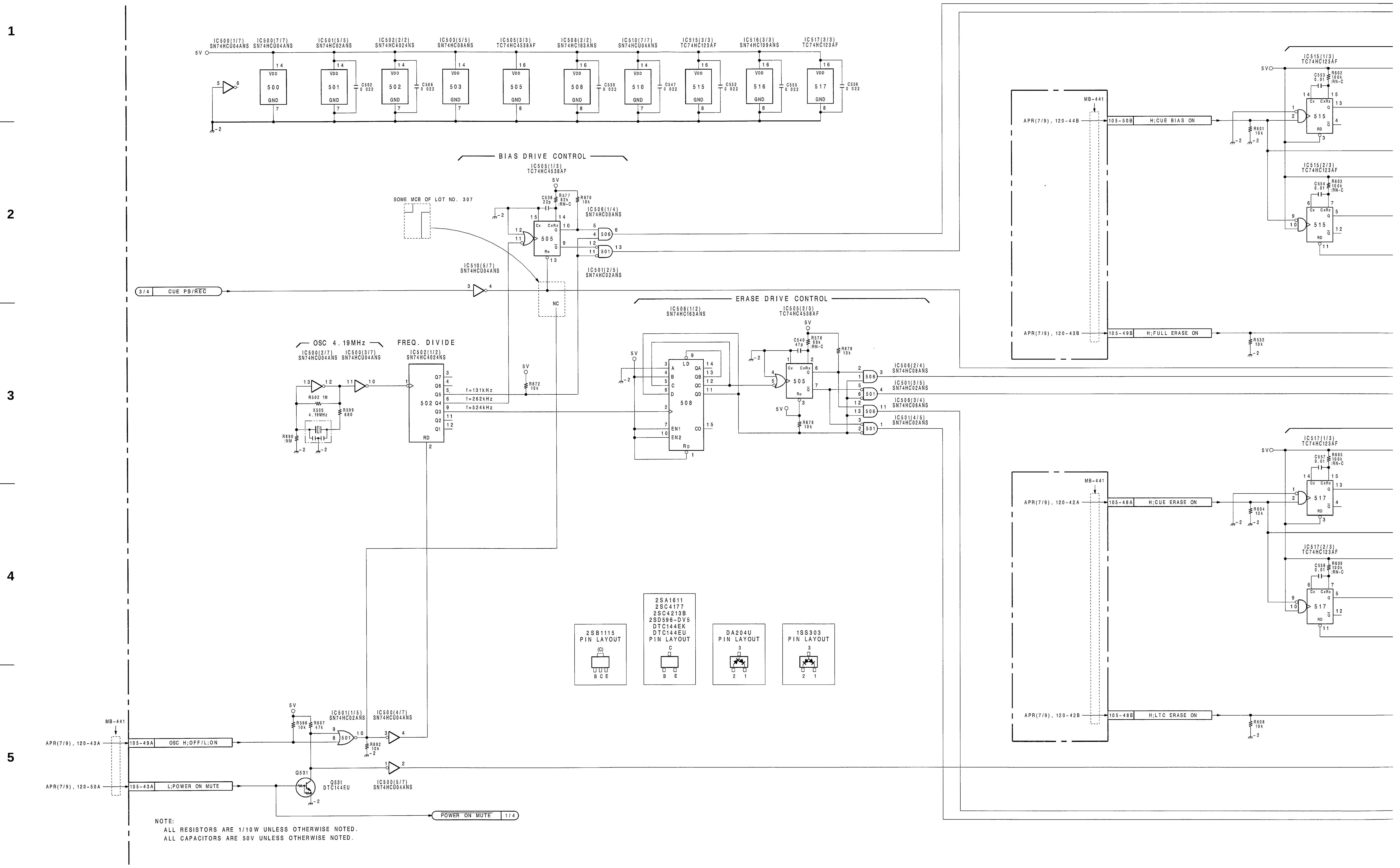
BIAS DRIVE CONTROL
ERASE DRIVE CONTROL
OSC 4.19MHz
FREQ. DIVIDE
SOME MCB OF LOT NO. 307
CUE PB/REC
H;CUE BIAS ON
H;FULL ERASE ON
H;CUE ERASE ON
H;LTC ERASE ON
OSC H;OFF/L;ON
L;POWER ON MUTE
POWER ON MUTE
MB-441
2SB1115 PIN LAYOUT
2SA1611 2SC4177 2SC4213B 2SD596-DV5 DTC144EK DTC144EU PIN LAYOUT
DA204U PIN LAYOUT
1SS303 PIN LAYOUT
NOTE:
ALL RESISTORS ARE 1/10W UNLESS OTHERWISE NOTED.
ALL CAPACITORS ARE 50V UNLESS OTHERWISE NOTED.

A B C D E F G H

 CUE-1A/1 (4/4)

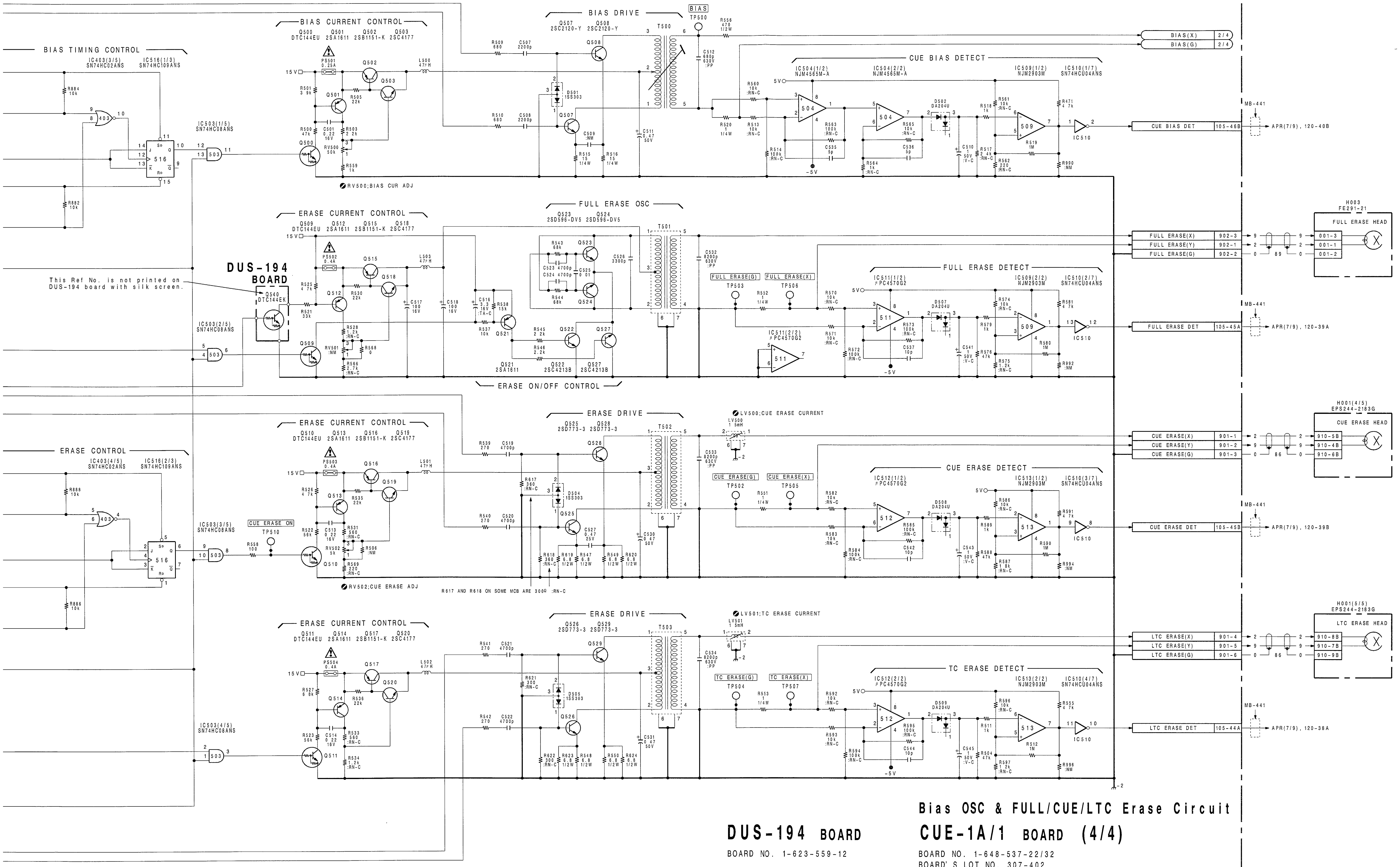

1

2

3

4

5

Bias OSC & FULL/CUE/LTC Erase Circuit

DUS-194 BOARD

BOARD NO. 1-623-559-12

CUE-1A/1 BOARD (4/4)

BOARD NO. 1-648-537-22/32
BOARD' S LOT NO. 307-402
DVW-A500(J, UC) :CUE-1A MCB
DVW-500 (J, UC) :CUE-1 MCB

DVW-CUE1-NTSC-REC-S/M-03-B

I | J | K | L | M | N | O | P

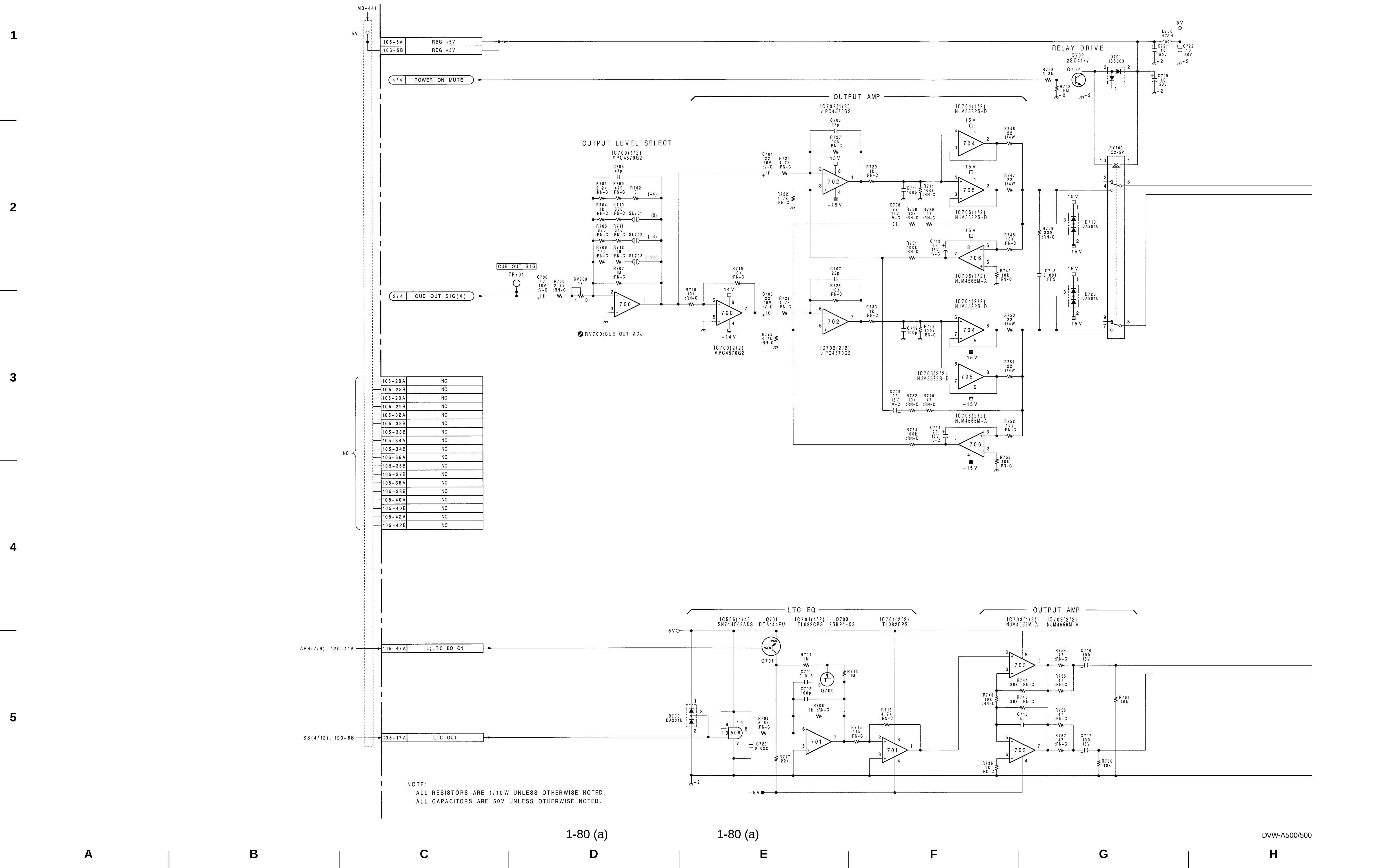

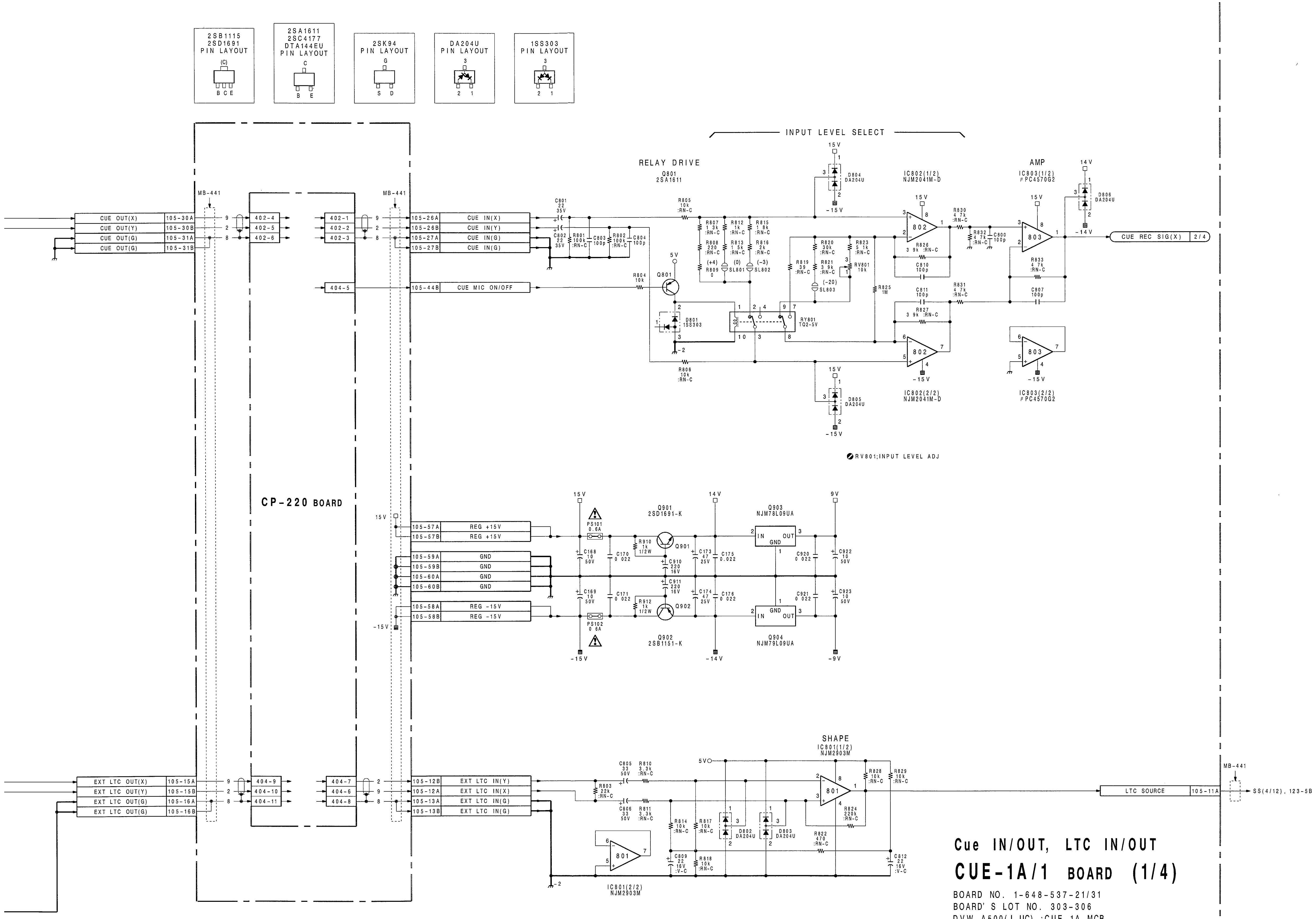

Cue IN/OUT, LTC IN/OUT

CUE-1A/1 BOARD (1/4)

BOARD NO. 1-648-537-21/31
BOARD' S LOT NO. 303-306
DVW-A500(J, UC) :CUE-1A MCB
DVW-500 (J, UC) :CUE-1 MCB

DVW-CUE1-NTSC-REC-S/M-03-A

1
2
3
4
5

I J K L M N O P

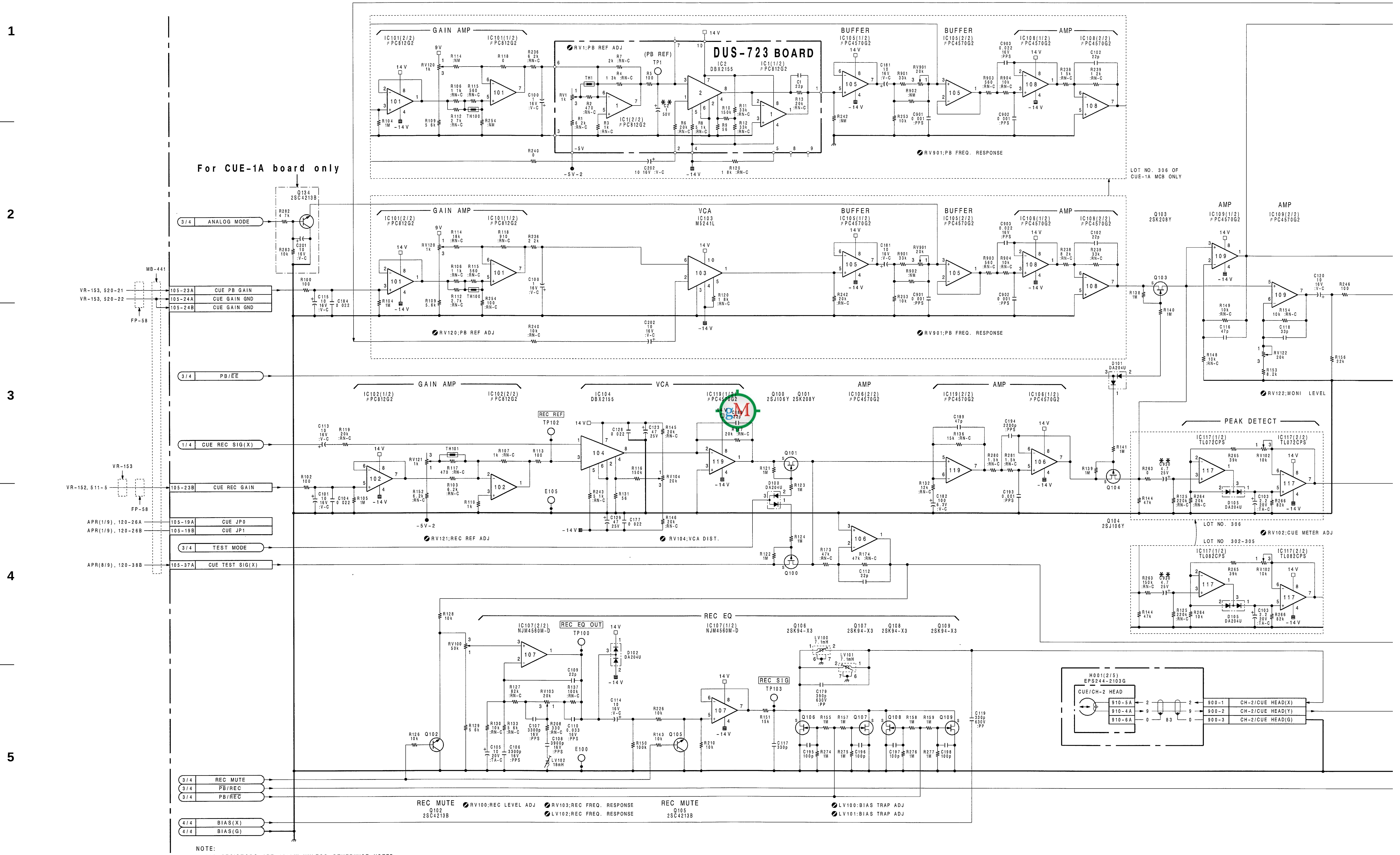

NOTE:
ALL RESISTORS ARE 1/10W UNLESS OTHERWISE NOTED.
ALL CAPACITORS ARE 50V UNLESS OTHERWISE NOTED.

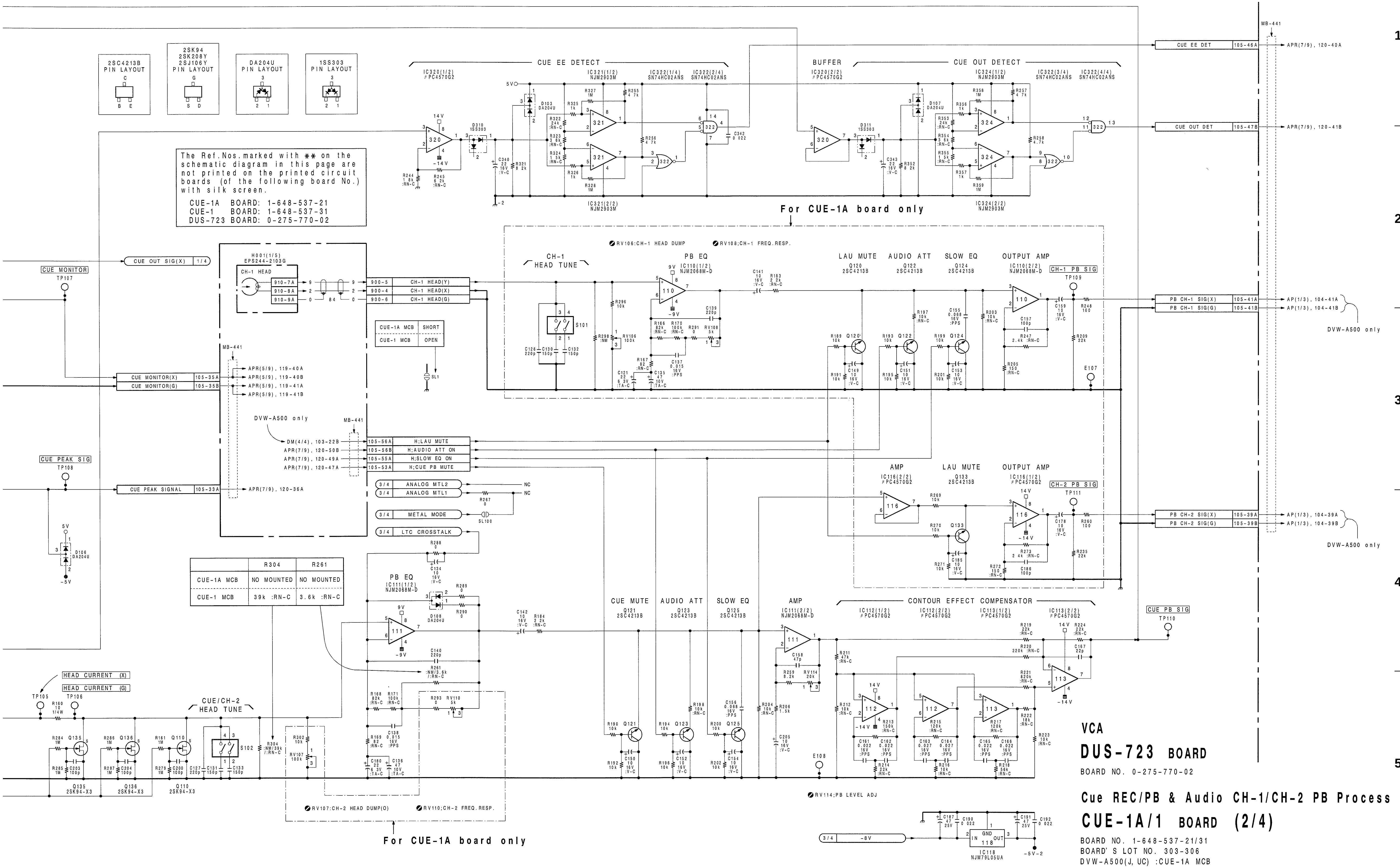

The Ref.Nos.marked with ✱✱ on the schematic diagram in this page are not printed on the printed circuit boards (of the following board No.) with silk screen.

CUE-1A BOARD: 1-648-537-21
CUE-1 BOARD: 1-648-537-31
DUS-723 BOARD: 0-275-770-02

	R304	R261
CUE-1A MCB	NO MOUNTED	NO MOUNTED
CUE-1 MCB	39k :RN-C	3.6k :RN-C

VCA
DUS-723 BOARD
BOARD NO. 0-275-770-02

Cue REC/PB & Audio CH-1/CH-2 PB Process
CUE-1A/1 BOARD (2/4)
BOARD NO. 1-648-537-21/31
BOARD' S LOT NO. 303-306
DVW-A500(J, UC) :CUE-1A MCB
DVW-500 (J, UC) :CUE-1 MCB

DVW-CUE1-NTSC-REC-S/M-03-A

CUE-1A/1 (3/4)

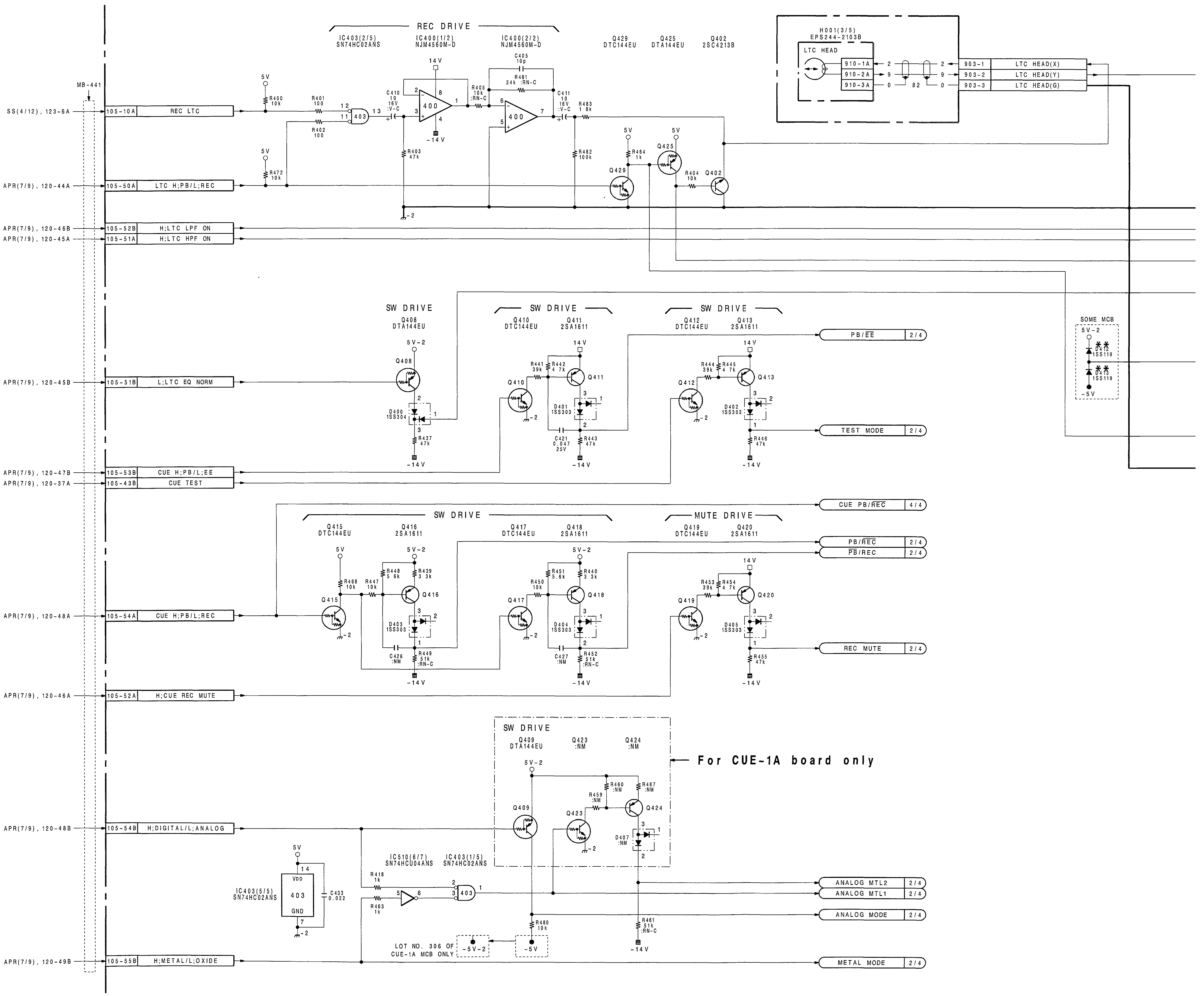

1-84 (a)

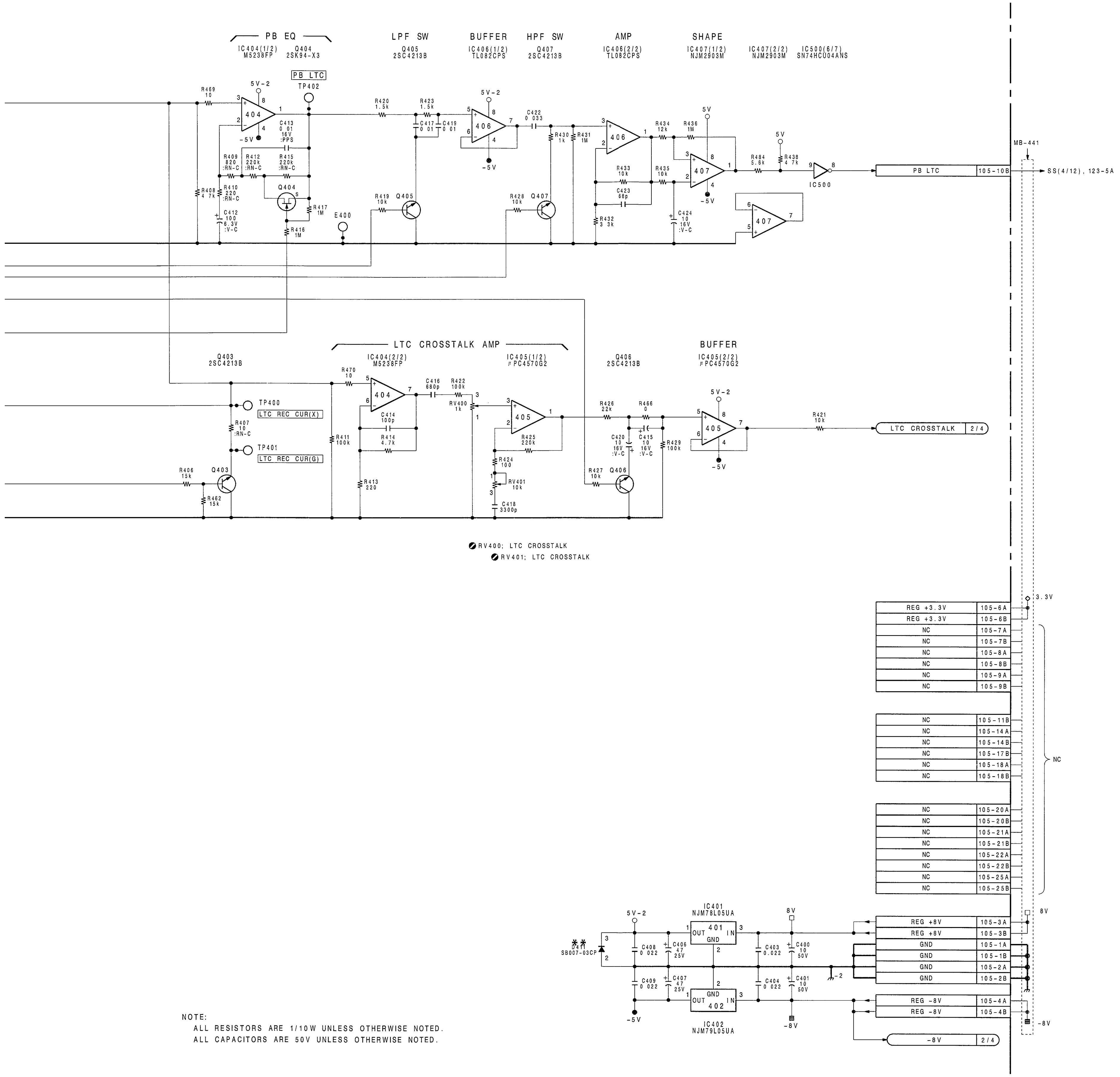

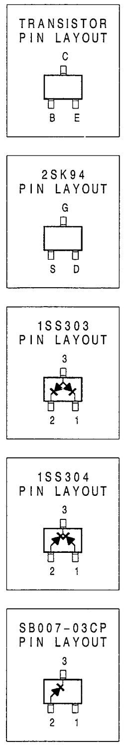

NOTE:
ALL RESISTORS ARE 1/10W UNLESS OTHERWISE NOTED.
ALL CAPACITORS ARE 50V UNLESS OTHERWISE NOTED.

The Ref.Nos.marked with ✱✱ on the schematic diagram in this page are not printed on the printed circuit boards (of the following board No.) with silk screen.

CUE-1A BOARD: 1-648-537-21
CUE-1 BOARD: 1-648-537-31

LTC REC/PB Process & Control Circuit

CUE-1A/1 BOARD (3/4)

BOARD NO. 1-648-537-21/31
BOARD' S LOT NO. 303-306
DVW-A500(J, UC) :CUE-1A MCB
DVW-500 (J, UC) :CUE-1 MCB

DVW-CUE1-NTSC-REC-S/M-03-A

 CUE-1A/1 (4/4)

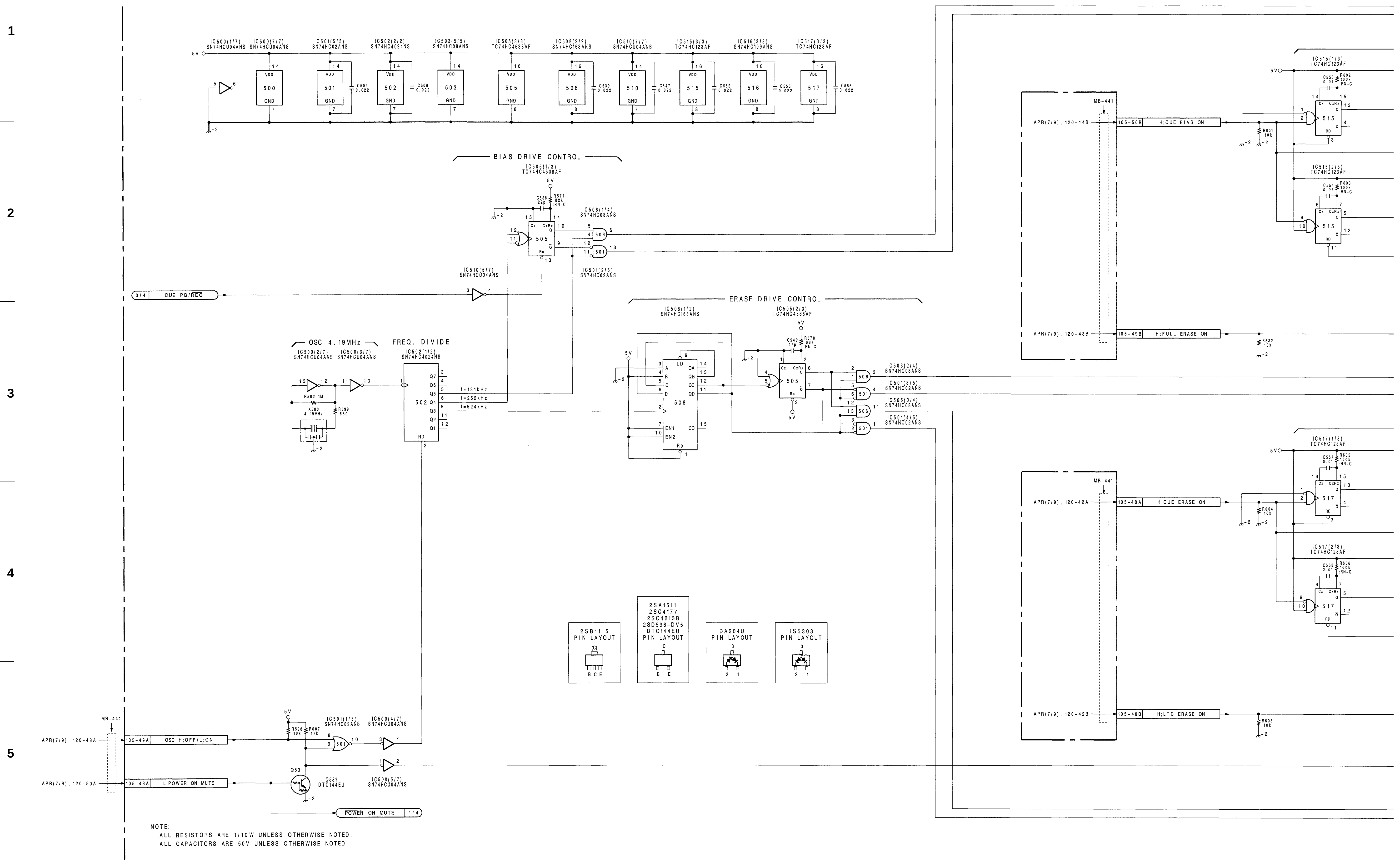

A B C D E F G H

http://getMANUAL.com

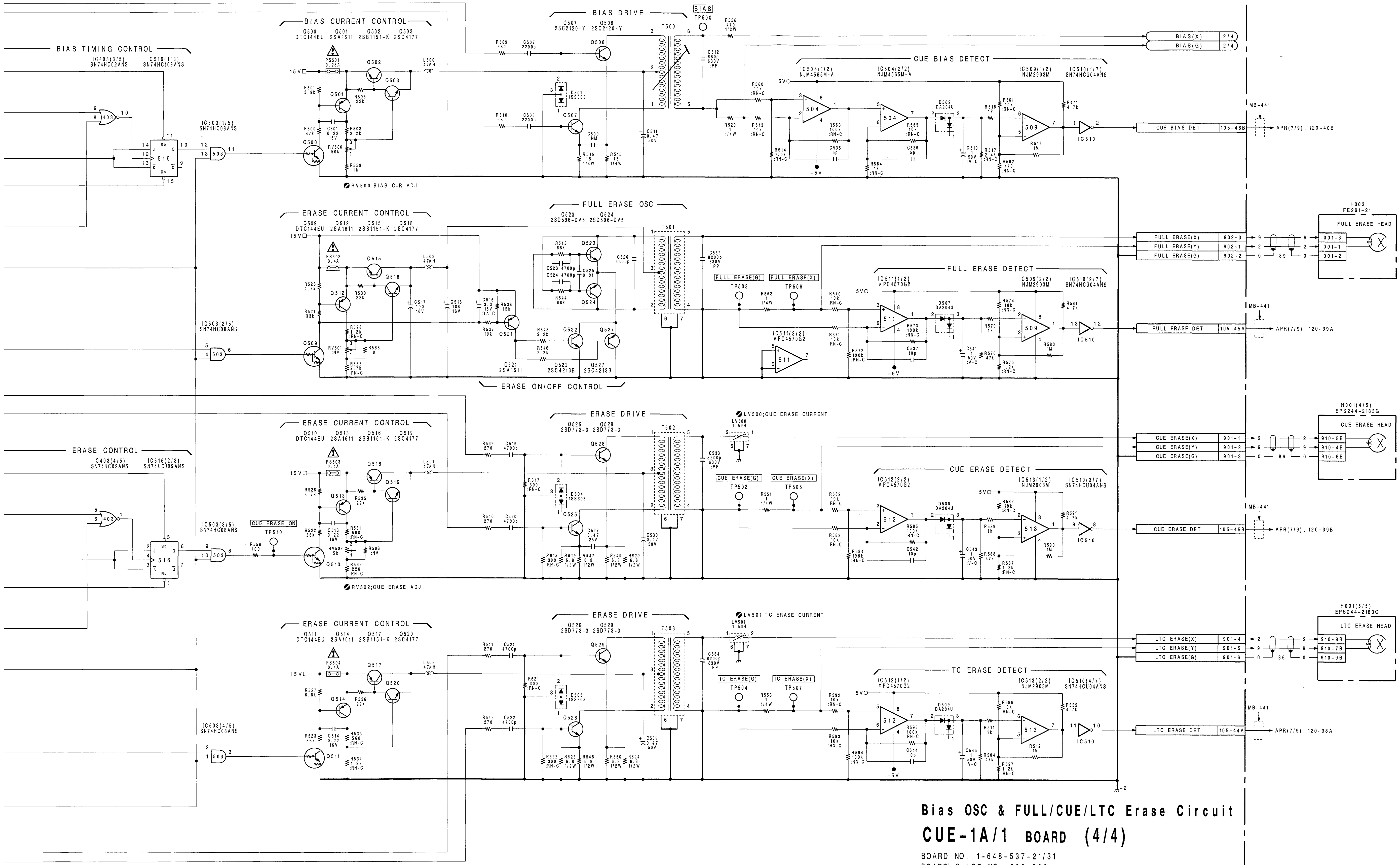

Bias OSC & FULL/CUE/LTC Erase Circuit

CUE-1A/1 BOARD (4/4)

BOARD NO. 1-648-537-21/31
BOARD' S LOT NO. 303-306
DVW-A500(J, UC) :CUE-1AP MCB
DVW-500 (J, UC) :CUE-1APG MCB

DVW-CUE10NTSC-REC-S/M-03-A

DM-89 Board -A Side- (1-648-541-15, 16, 17)

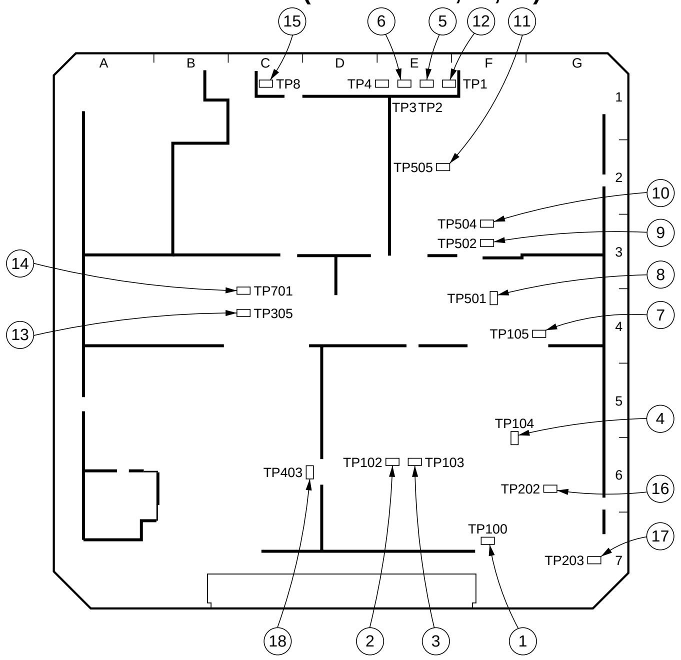

DM-89 Board -A Side- (1-648-541-13, 14)

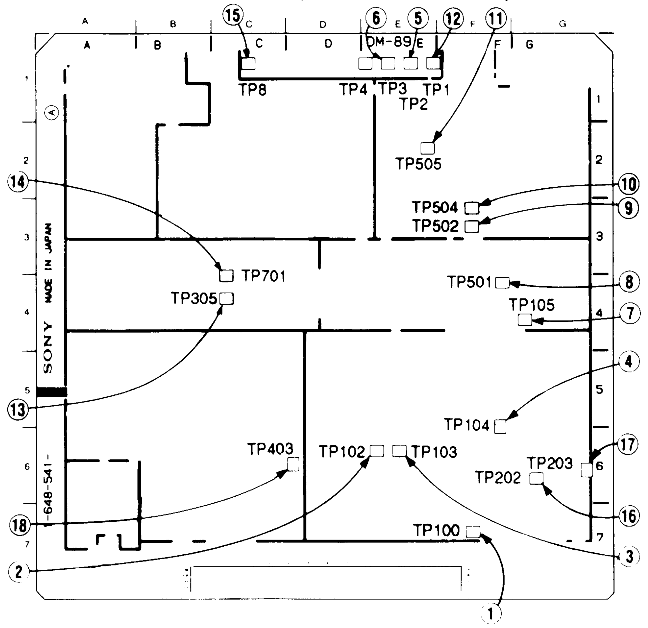

DM-89 Board -A Side- (1-648-541-11, 12)

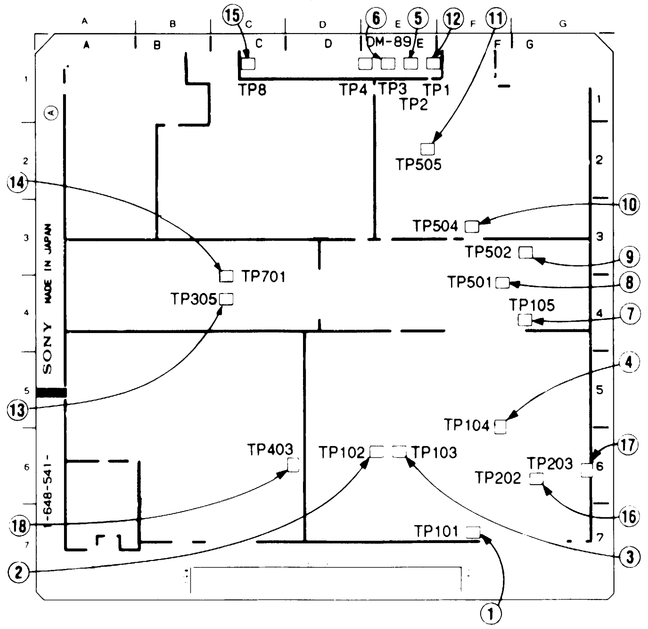

 DM-89

① TP100/101 (F-7) PB mode
TP4 (E-1) (TRIG)

TP100 or TP101

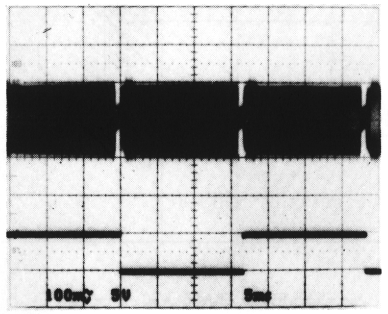

TP4

② TP102(E-6) PB mode
TP4(E-1)(TRIG)

TP102

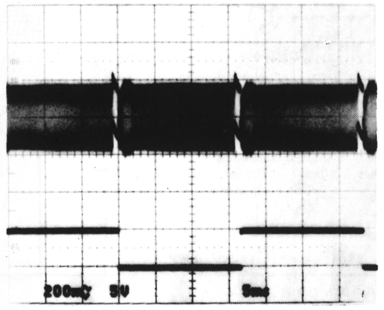

TP4

③ TP103(E-6) PB mode
TP4(E-1)(TRIG)

TP103

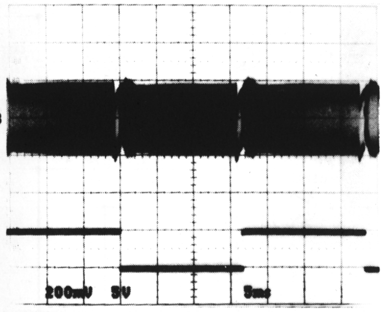

TP4

④ TP104(F-5) PB mode
TP4(E-1)(TRIG)

TP104

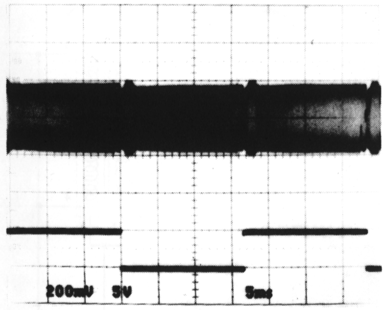

TP4

⑤ TP2(E-1) PB mode
TP4(E-1)(TRIG)

TP2

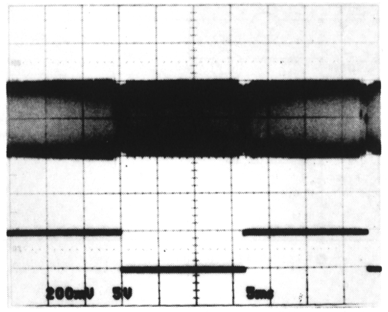

TP4

⑥ TP3(E-1) PB mode
TP4(E-1)(TRIG)

TP3

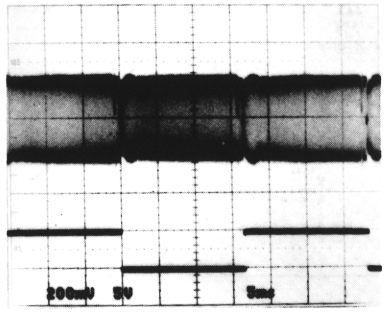

TP4

⑦ TP105(G-4) PB mode
TP4(E-1)(TRIG)

TP105

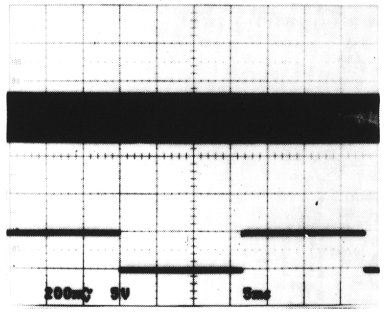

TP4

⑧ TP501(F-4) PB mode
TP4(E-1)(TRIG)

TP501

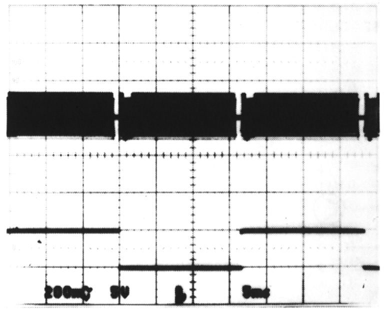

TP4

⑨ TP502 (F-3/G-3) PB mode
TP4(E-1)(TRIG)

TP502 (V)

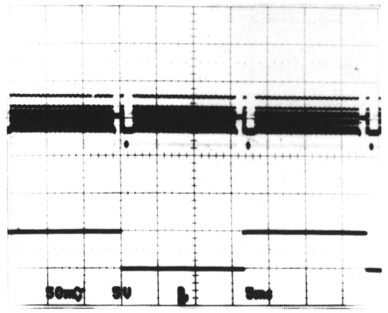

TP4

TP502 (H)

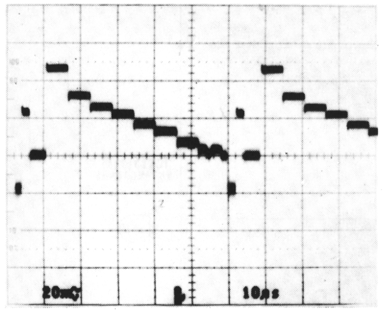

⑩ TP504 (F-2/F-3) PB mode

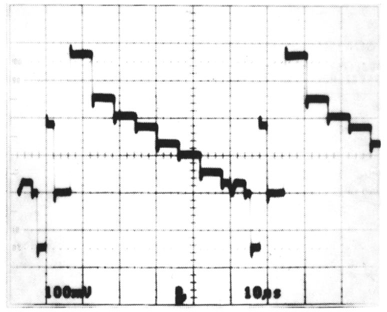

⑪ TP505(E-2) PB mode

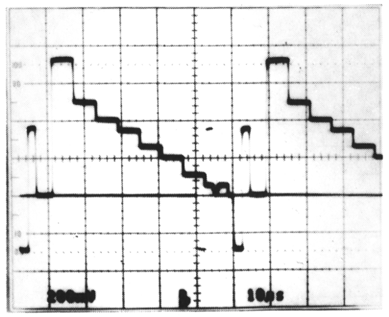

⑫ TP1(E-1) PB mode

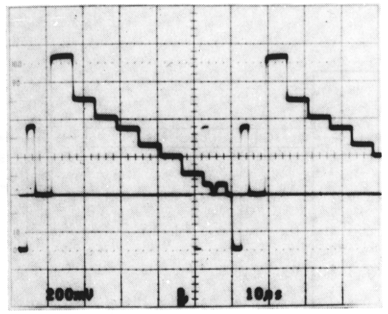

⑬ TP305(C-4) PB mode
TP5(D-1)(TRIG)

TP305

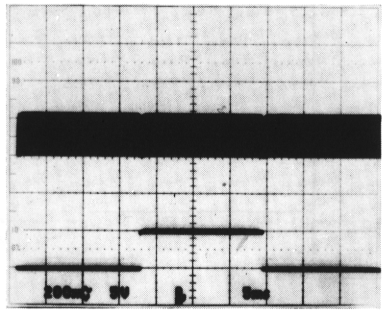

TP5

⑭ TP701(C-4) PB mode
TP5(D-1)(TRIG)

TP701

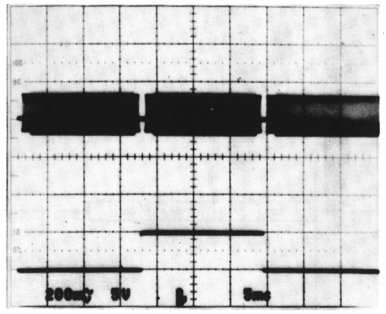

TP5

⑮ TP8(C-1) PB mode

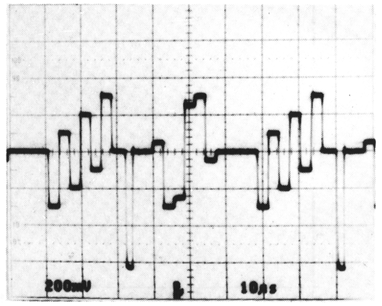

⑯ TP202(G-6) ×−3 SPEED mode
TP4(E-1)(TRIG)

TP202

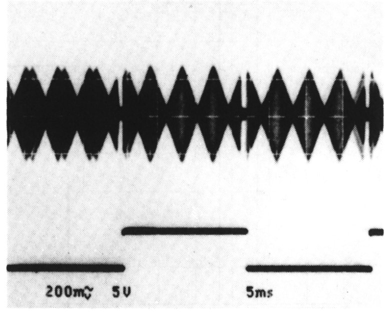

TP4

⑰ TP203(G-6) PB mode
TP4(E-1)(TRIG)

TP203

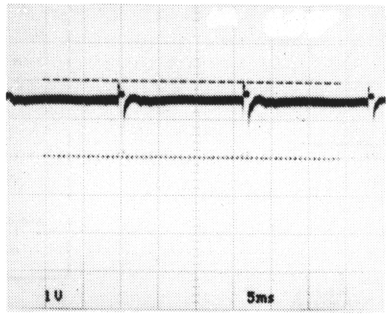

⑱ TP403(D-6) PB mode
TP4(E-1)(TRIG)

TP403

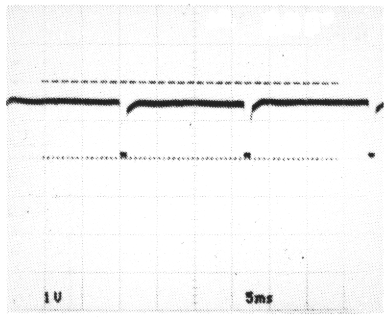

Measurement condition
MODE : PB mode
: ×−3 SPEED mode
TAPE : CR5-1B

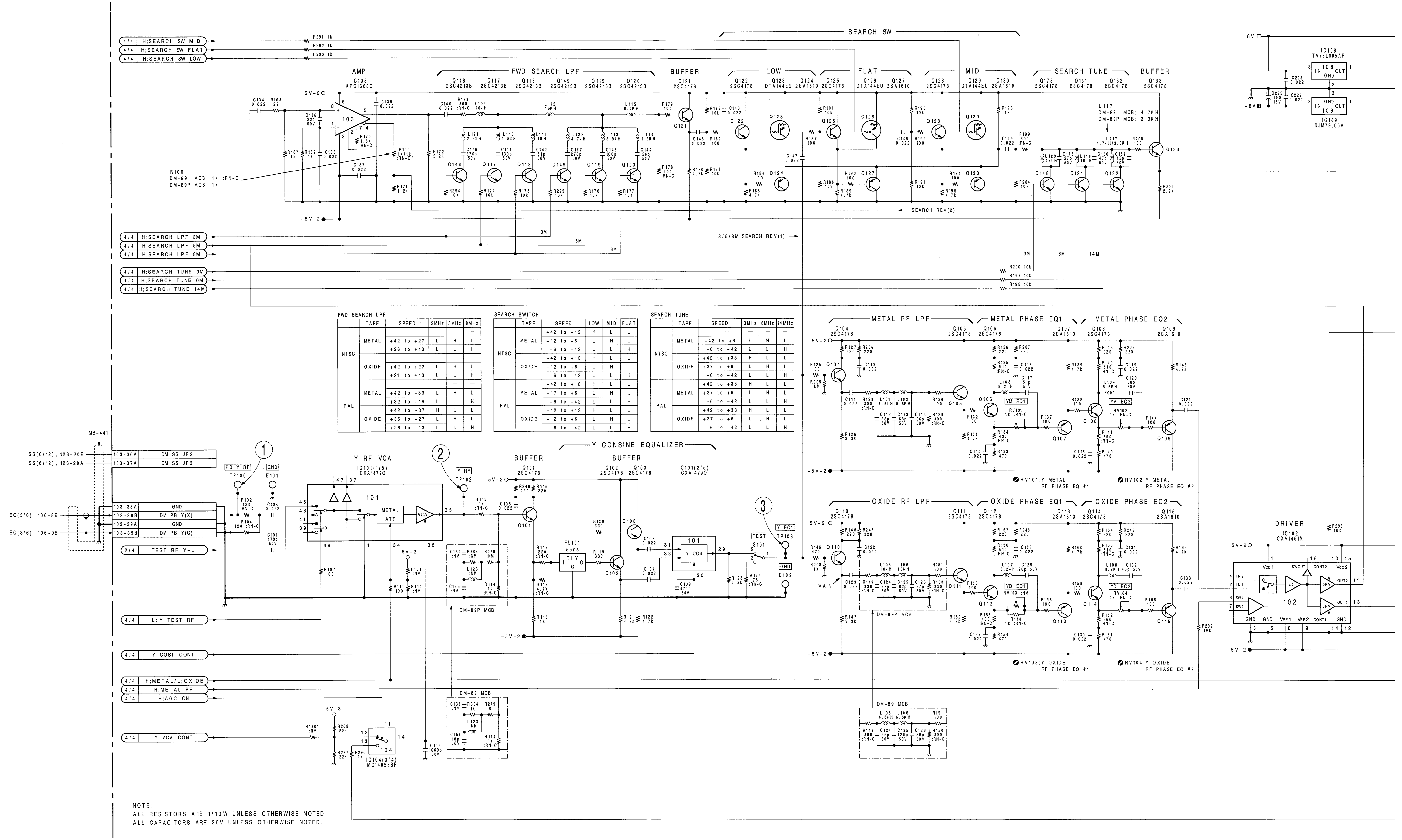

FWD SEARCH LPF

	TAPE	SPEED	3MHz	5MHz	8MHz
NTSC	METAL	———	—	—	—
		+42 to +27	L	H	L
		+26 to +13	L	L	H
	OXIDE	———	—	—	—
		+42 to +22	L	H	L
		+21 to +13	L	L	H
PAL	METAL	———	—	—	—
		+42 to +33	L	H	L
		+32 to +18	L	L	H
	OXIDE	+42 to +37	H	L	L
		+36 to +27	L	H	L
		+26 to +13	L	L	H

SEARCH SWITCH

	TAPE	SPEED	LOW	MID	FLAT
NTSC	METAL	+42 to +13	H	L	L
		+12 to +6	L	H	L
		-6 to -42	L	L	H
	OXIDE	+42 to +13	H	L	L
		+12 to +6	L	H	L
		-6 to -42	L	L	H
PAL	METAL	+42 to +18	H	L	L
		+17 to +6	L	H	L
		-6 to -42	L	L	H
	OXIDE	+42 to +13	H	L	L
		+12 to +6	L	H	L
		-6 to -42	L	L	H

SEARCH TUNE

	TAPE	SPEED	3MHz	6MHz	14MHz
NTSC	METAL	———	—	—	—
		+42 to +6	L	H	L
		-6 to -42	L	L	H
	OXIDE	+42 to +38	H	L	L
		+37 to +6	L	H	L
		-6 to -42	L	L	H
PAL	METAL	+42 to +38	H	L	L
		+37 to +6	L	H	L
		-6 to -42	L	L	H
	OXIDE	+42 to +38	H	L	L
		+37 to +6	L	H	L
		-6 to -42	L	L	H

NOTE;
ALL RESISTORS ARE 1/10W UNLESS OTHERWISE NOTED.
ALL CAPACITORS ARE 25V UNLESS OTHERWISE NOTED.

 DM-89 (1/4)

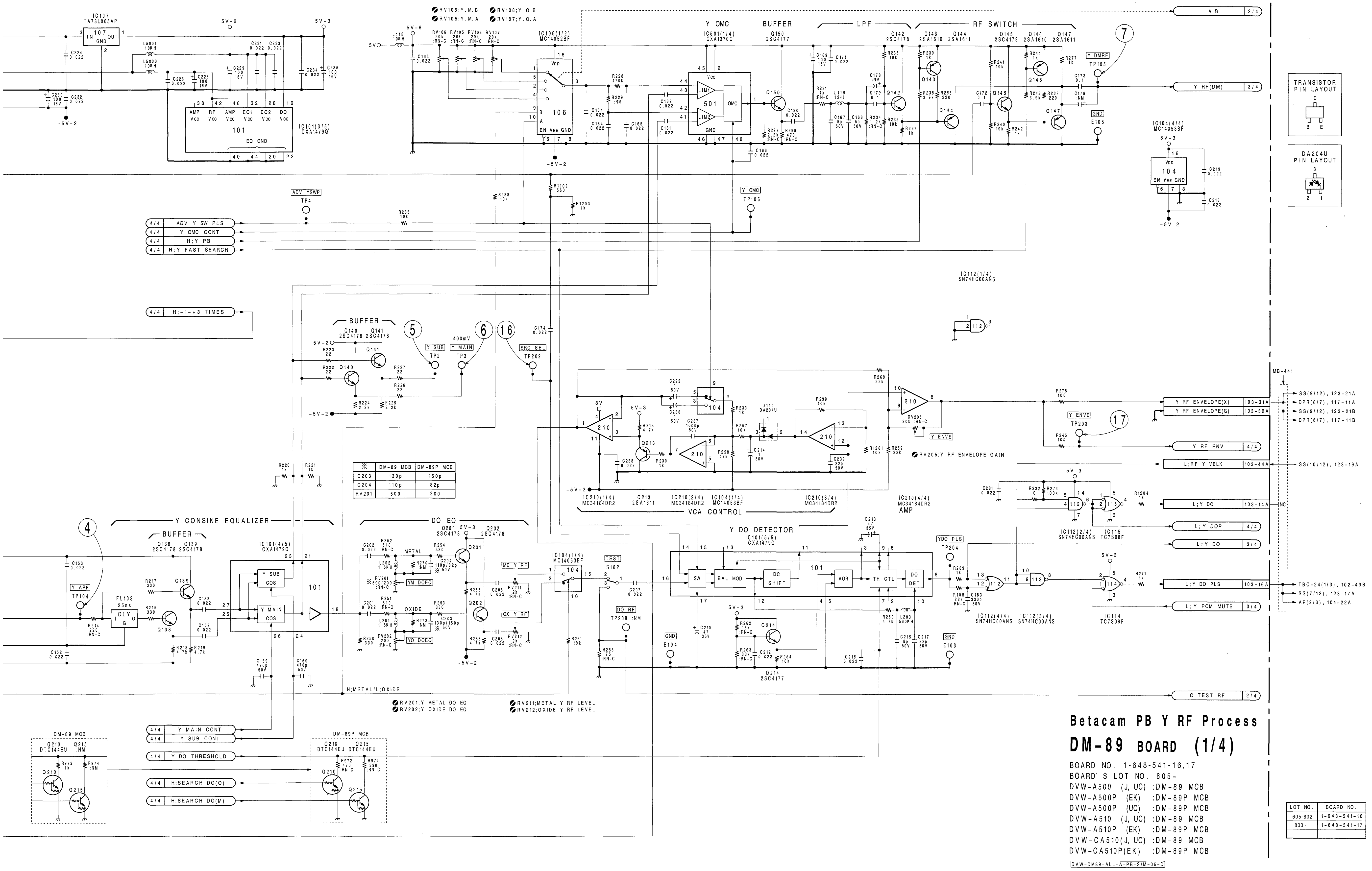

※	DM-89 MCB	DM-89P MCB
C203	130p	150p
C204	110p	82p
RV201	500	200

Betacam PB Y RF Process

DM-89 BOARD (1/4)

BOARD NO. 1-648-541-16,17
BOARD' S LOT NO. 605-
DVW-A500 (J, UC) :DM-89 MCB
DVW-A500P (EK) :DM-89P MCB
DVW-A500P (UC) :DM-89P MCB
DVW-A510 (J, UC) :DM-89 MCB
DVW-A510P (EK) :DM-89P MCB
DVW-CA510(J, UC) :DM-89 MCB
DVW-CA510P(EK) :DM-89P MCB

DVW-DM89-ALL-A-PB-S/M-06-D

LOT NO.	BOARD NO.
605-802	1-648-541-16
803-	1-648-541-17

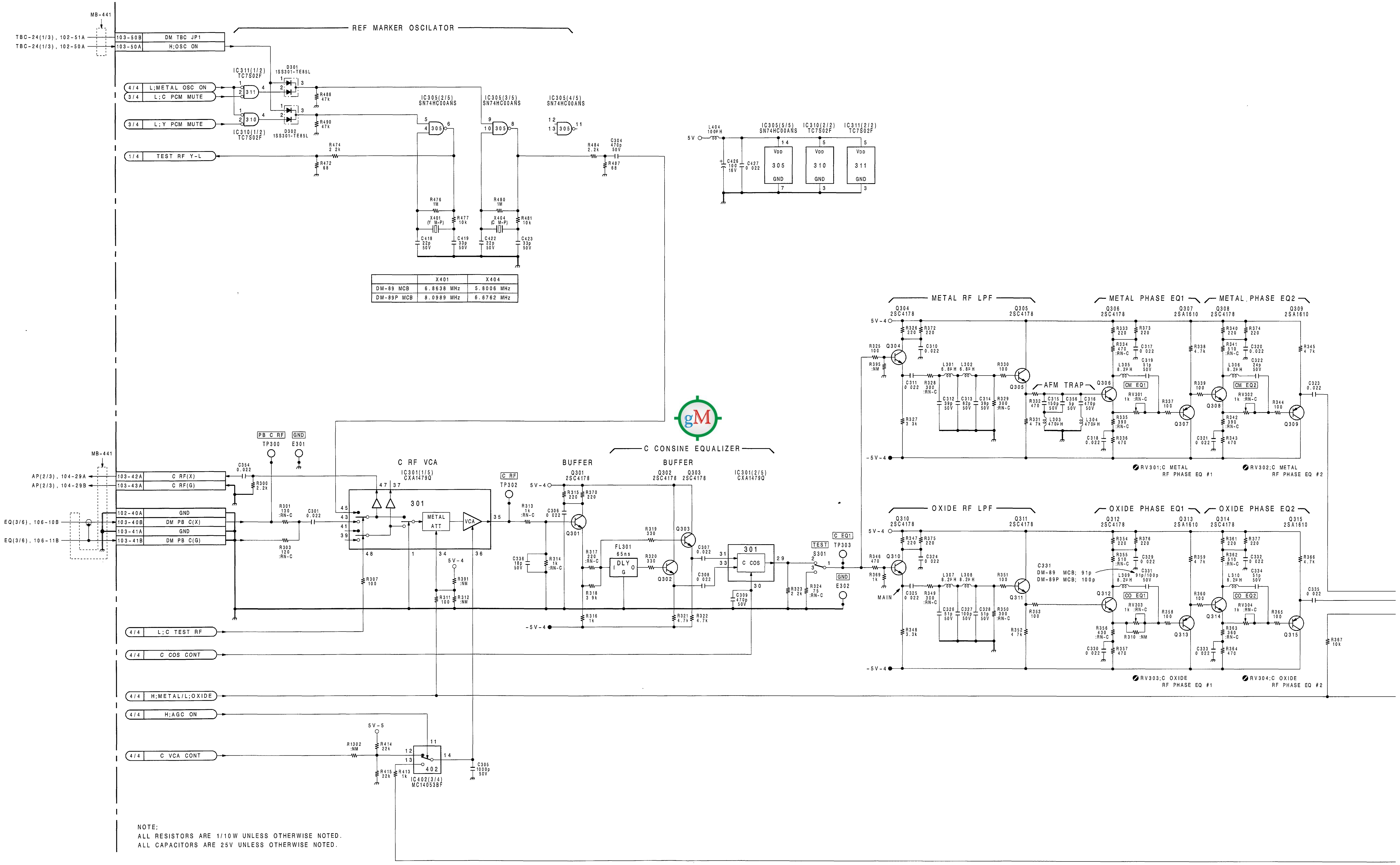

	X401	X404
DM-89 MCB	6.8638 MHz	5.8006 MHz
DM-89P MCB	8.0989 MHz	6.6762 MHz

NOTE;
ALL RESISTORS ARE 1/10W UNLESS OTHERWISE NOTED.
ALL CAPACITORS ARE 25V UNLESS OTHERWISE NOTED.

DM-89 (2/4)

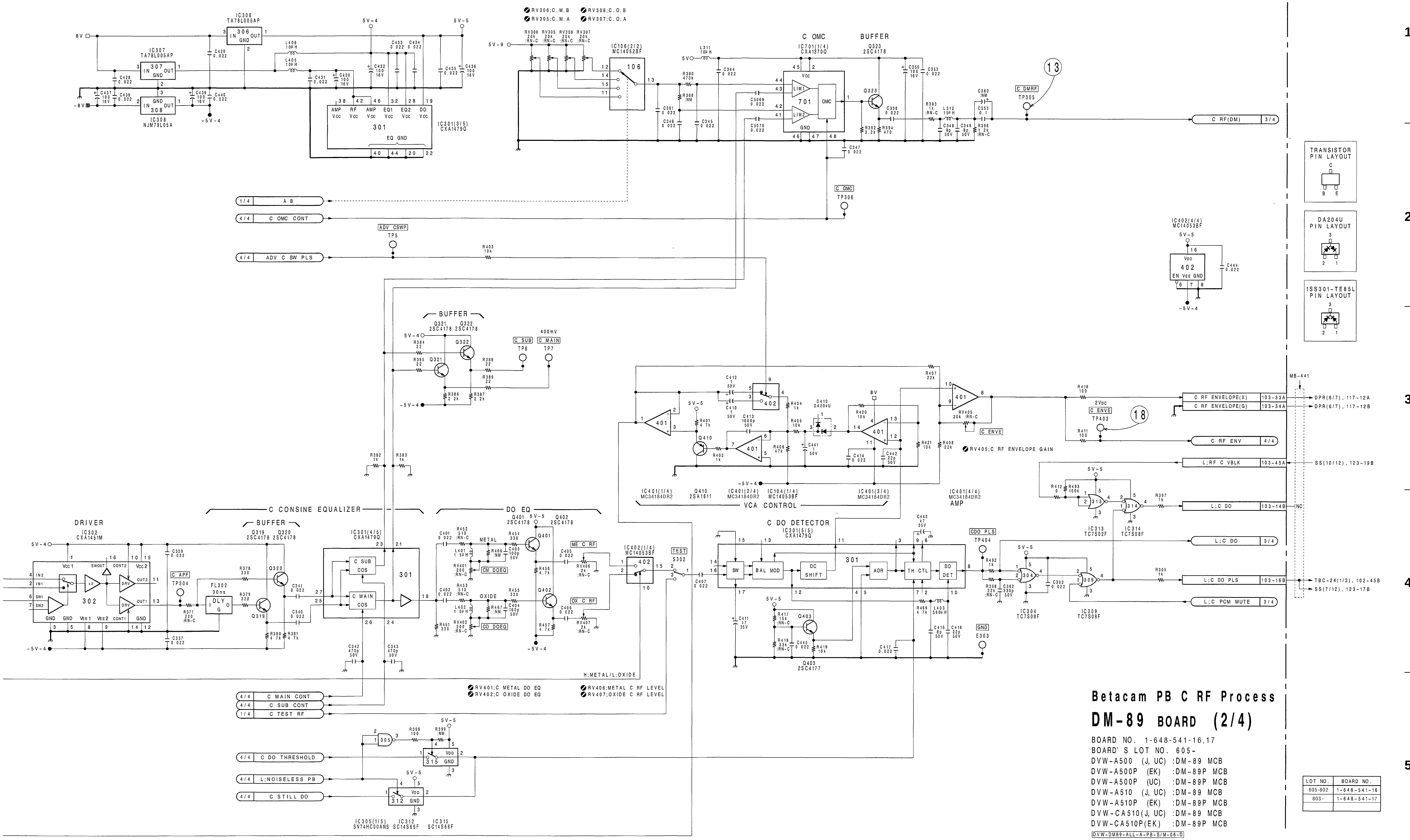
Betacam PB C RF Process
DM-89 BOARD (2/4)
BOARD NO. 1-648-541-16,17
BOARD' S LOT NO. 605-
DVW-A500 (J, UC) :DM-89 MCB
DVW-A500P (EK) :DM-89P MCB
DVW-A500P (UC) :DM-89P MCB
DVW-A510 (J, UC) :DM-89 MCB
DVW-A510P (EK) :DM-89P MCB
DVW-CA510(J, UC) :DM-89 MCB
DVW-CA510P(EK) :DM-89P MCB
DVW-DM89-ALL-A-PB-S/M-06-D
LOT NO. BOARD NO.
605-802 1-648-541-16
803- 1-648-541-17
C CONSINE EQUALIZER
DO EQ
DRIVER
BUFFER
C OMC
VCA CONTROL
C DO DETECTOR
AMP
TRANSISTOR PIN LAYOUT
DA204U PIN LAYOUT
1SS301-TE85L PIN LAYOUT

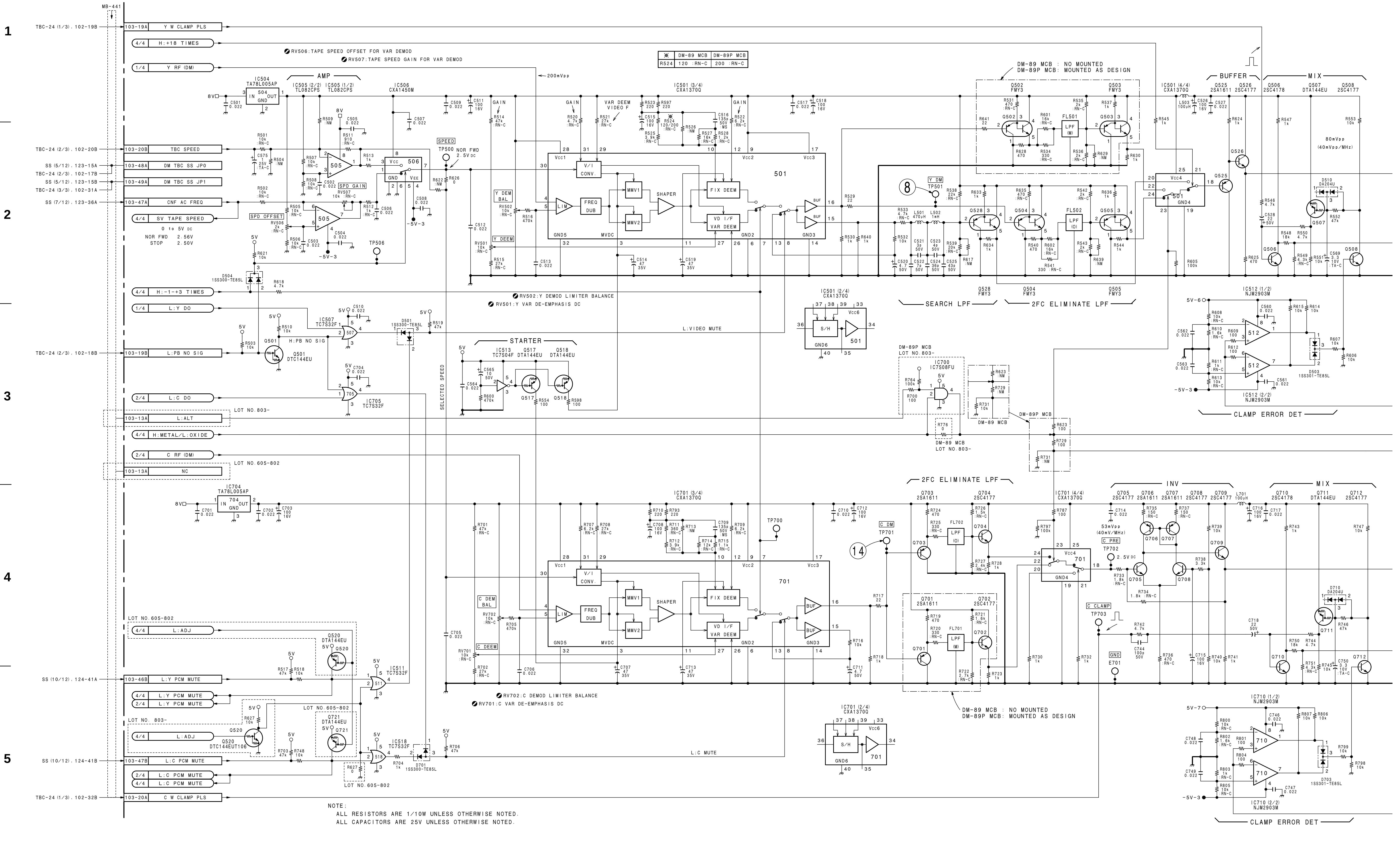

NOTE:
ALL RESISTORS ARE 1/10W UNLESS OTHERWISE NOTED.
ALL CAPACITORS ARE 25V UNLESS OTHERWISE NOTED.

DM-89 (3/4)

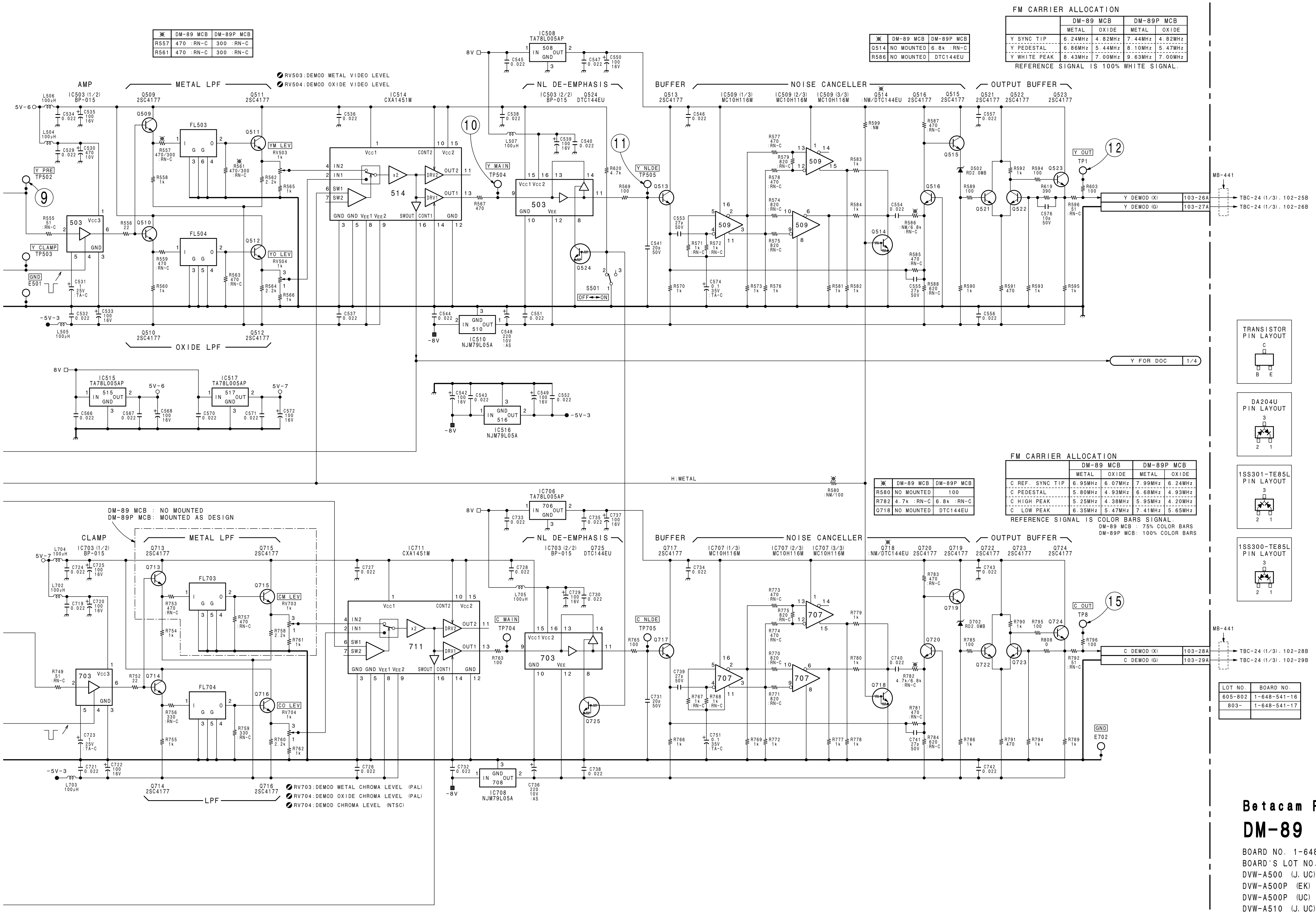

※	DM-89 MCB	DM-89P MCB
R557	470 :RN-C	300 :RN-C
R561	470 :RN-C	300 :RN-C

※	DM-89 MCB	DM-89P MCB
Q514	NO MOUNTED	6.8k :RN-C
R586	NO MOUNTED	DTC144EU

FM CARRIER ALLOCATION

	DM-89 MCB		DM-89P MCB	
	METAL	OXIDE	METAL	OXIDE
Y SYNC TIP	6.24MHz	4.82MHz	7.44MHz	4.82MHz
Y PEDESTAL	6.86MHz	5.44MHz	8.10MHz	5.47MHz
Y WHITE PEAK	8.43MHz	7.00MHz	9.63MHz	7.00MHz

REFERENCE SIGNAL IS 100% WHITE SIGNAL.

※	DM-89 MCB	DM-89P MCB
R580	NO MOUNTED	100
R782	4.7k :RN-C	6.8k :RN-C
Q718	NO MOUNTED	DTC144EU

FM CARRIER ALLOCATION

	DM-89 MCB		DM-89P MCB	
	METAL	OXIDE	METAL	OXIDE
C REF. SYNC TIP	6.95MHz	6.07MHz	7.99MHz	6.24MHz
C PEDESTAL	5.80MHz	4.93MHz	6.68MHz	4.93MHz
C HIGH PEAK	5.25MHz	4.38MHz	5.95MHz	4.20MHz
C LOW PEAK	6.35MHz	5.47MHz	7.41MHz	5.65MHz

REFERENCE SIGNAL IS COLOR BARS SIGNAL.
DM-89 MCB : 75% COLOR BARS
DM-89P MCB: 100% COLOR BARS

LOT NO.	BOARD NO.
605-802	1-648-541-16
803-	1-648-541-17

Betacam PB Y/C Demod Process

DM-89 BOARD (3/4)

BOARD NO. 1-648-541-16, 17
BOARD'S LOT NO. 605-
DVW-A500 (J, UC) :DM-89 MCB
DVW-A500P (EK) :DM-89P MCB
DVW-A500P (UC) :DM-89P MCB
DVW-A510 (J, UC) :DM-89 MCB
DVW-A510P (EK) :DM-89P MCB
DVW-CA510 (J, UC) :DM-89 MCB
DVW-CA510P (EK) :DM-89P MCB

DVW-DM89-ALL-A-PB-S/M-06-D

1-95 (d)

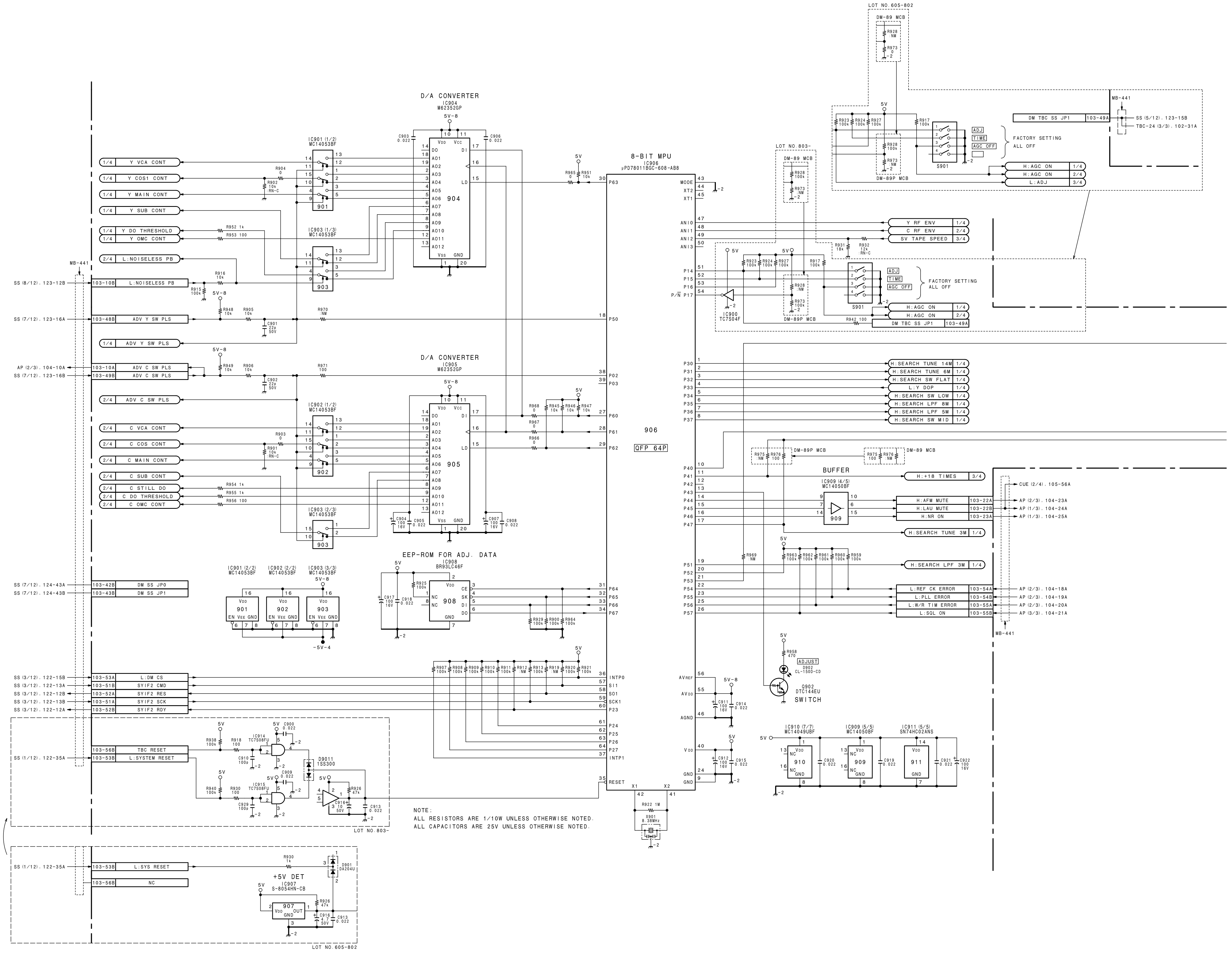
D/A CONVERTER
IC904
M62352GP
D/A CONVERTER
IC905
M62352GP
8-BIT MPU
IC906
μPD78011BGC-608-AB8
906
QFP 64P
EEP-ROM FOR ADJ. DATA
IC908
BR93LC46F
BUFFER
IC909 (4/5)
MC14050BF
+5V DET
IC907
S-8054HN-CB
SWITCH
Q902
DTC144EU
FACTORY SETTING
ALL OFF
LOT NO. 605-802
LOT NO. 803-
MB-441
NOTE:
ALL RESISTORS ARE 1/10W UNLESS OTHERWISE NOTED.
ALL CAPACITORS ARE 25V UNLESS OTHERWISE NOTED.

http://getMANUAL.com

 DM-89 (4/4)

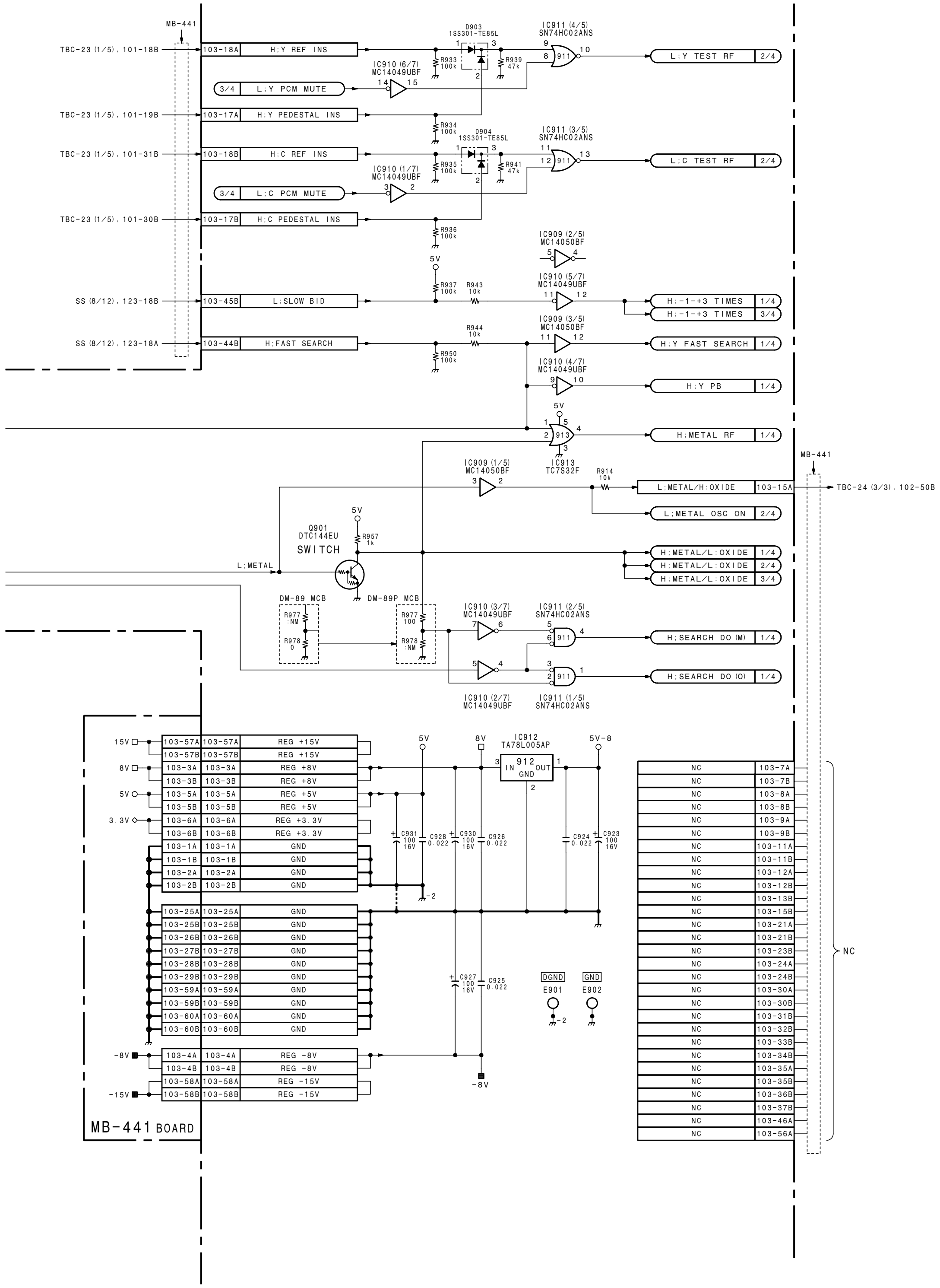

LOT NO.	BOARD NO.
605-802	1-648-541-16
803-	1-648-541-17

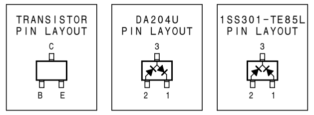

Betacam PB Control

DM-89 BOARD (4/4)

BOARD NO. 1-648-541-16, 17
BOARD'S LOT NO. 605-
DVW-A500 (J, UC) : DM-89 MCB
DVW-A500P (EK) : DM-89P MCB
DVW-A500P (UC) : DM-89P MCB
DVW-A510 (J, UC) : DM-89 MCB
DVW-A510P (EK) : DM-89P MCB
DVW-CA510 (J, UC) : DM-89 MCB
DVW-CA510P (EK) : DM-89P MCB

DVW-DM89-ALL-A-PB-S/M-06-D

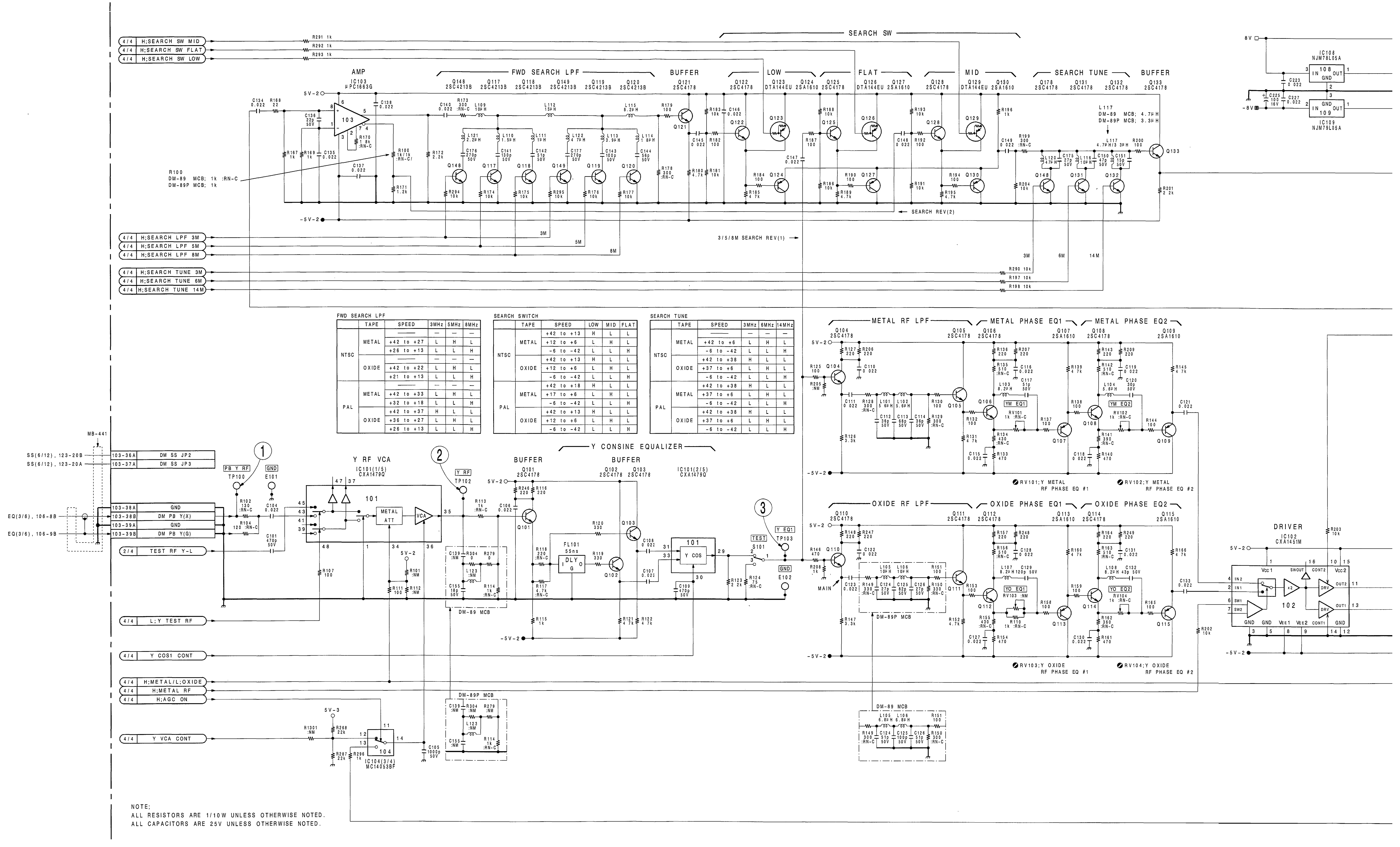

FWD SEARCH LPF

	TAPE	SPEED	3MHz	5MHz	8MHz
NTSC	METAL	———	—	—	—
		+42 to +27	L	H	L
		+26 to +13	L	L	H
	OXIDE	———	—	—	—
		+42 to +22	L	H	L
		+21 to +13	L	L	H
PAL	METAL	———	—	—	—
		+42 to +33	L	H	L
		+32 to +18	L	L	H
	OXIDE	+42 to +37	H	L	L
		+36 to +27	L	H	L
		+26 to +13	L	L	H

SEARCH SWITCH

	TAPE	SPEED	LOW	MID	FLAT
NTSC	METAL	+42 to +13	H	L	L
		+12 to +6	L	H	L
		-6 to -42	L	L	H
	OXIDE	+42 to +13	H	L	L
		+12 to +6	L	H	L
		-6 to -42	L	L	H
PAL	METAL	+42 to +18	H	L	L
		+17 to +6	L	H	L
		-6 to -42	L	L	H
	OXIDE	+42 to +13	H	L	L
		+12 to +6	L	H	L
		-6 to -42	L	L	H

SEARCH TUNE

	TAPE	SPEED	3MHz	6MHz	14MHz
NTSC	METAL	———	—	—	—
		+42 to +6	L	H	L
		-6 to -42	L	L	H
	OXIDE	+42 to +38	H	L	L
		+37 to +6	L	H	L
		-6 to -42	L	L	H
PAL	METAL	+42 to +38	H	L	L
		+37 to +6	L	H	L
		-6 to -42	L	L	H
	OXIDE	+42 to +38	H	L	L
		+37 to +6	L	H	L
		-6 to -42	L	L	H

NOTE;
ALL RESISTORS ARE 1/10W UNLESS OTHERWISE NOTED.
ALL CAPACITORS ARE 25V UNLESS OTHERWISE NOTED.

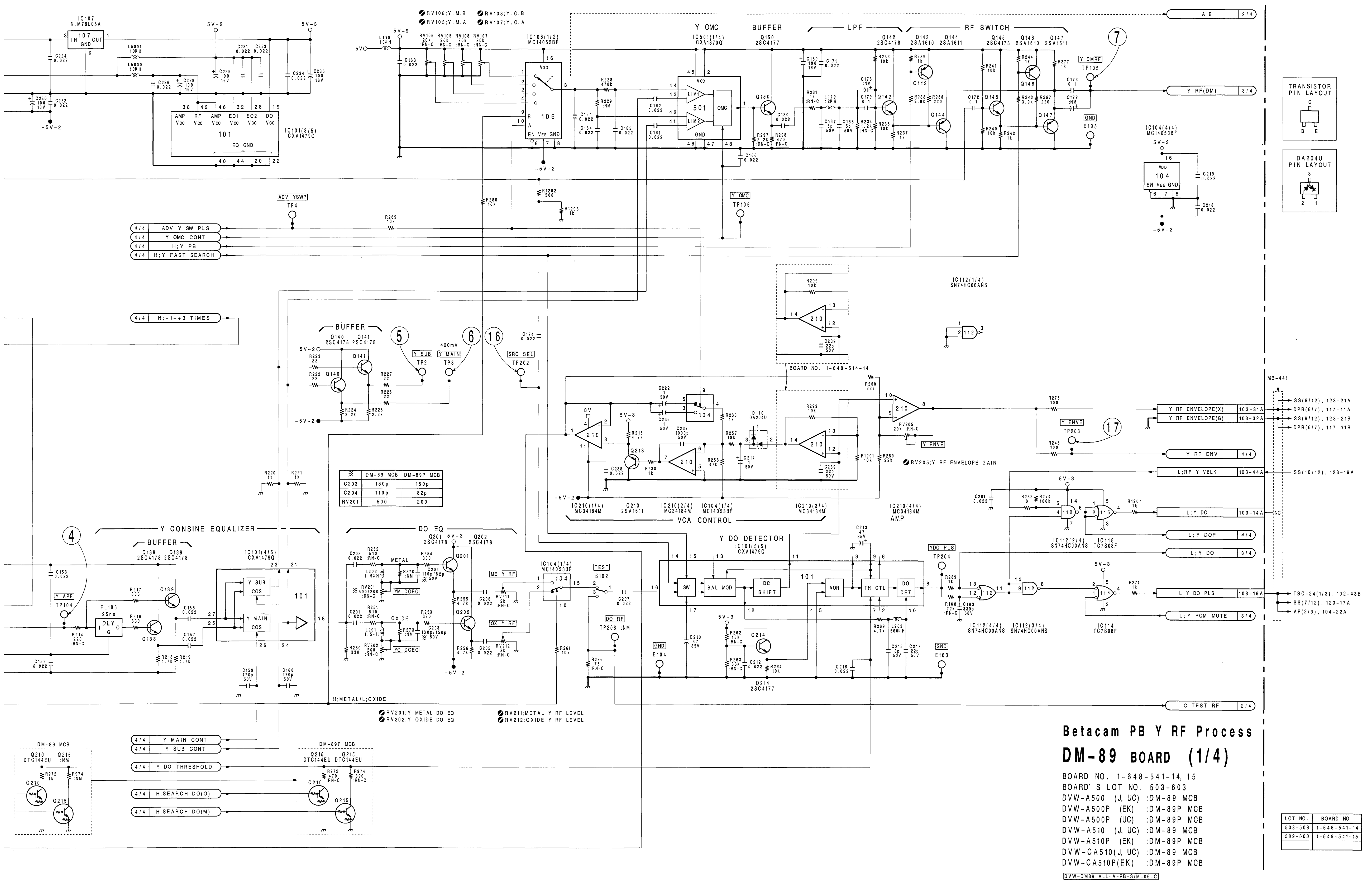

※	DM-89 MCB	DM-89P MCB
C203	130p	150p
C204	110p	82p
RV201	500	200

Betacam PB Y RF Process

DM-89 BOARD (1/4)

BOARD NO. 1-648-541-14, 15
BOARD' S LOT NO. 503-603
DVW-A500 (J, UC) :DM-89 MCB
DVW-A500P (EK) :DM-89P MCB
DVW-A500P (UC) :DM-89P MCB
DVW-A510 (J, UC) :DM-89 MCB
DVW-A510P (EK) :DM-89P MCB
DVW-CA510(J, UC) :DM-89 MCB
DVW-CA510P(EK) :DM-89P MCB

DVW-DM89-ALL-A-PB-S/M-06-C

LOT NO.	BOARD NO.
503-508	1-648-541-14
509-603	1-648-541-15

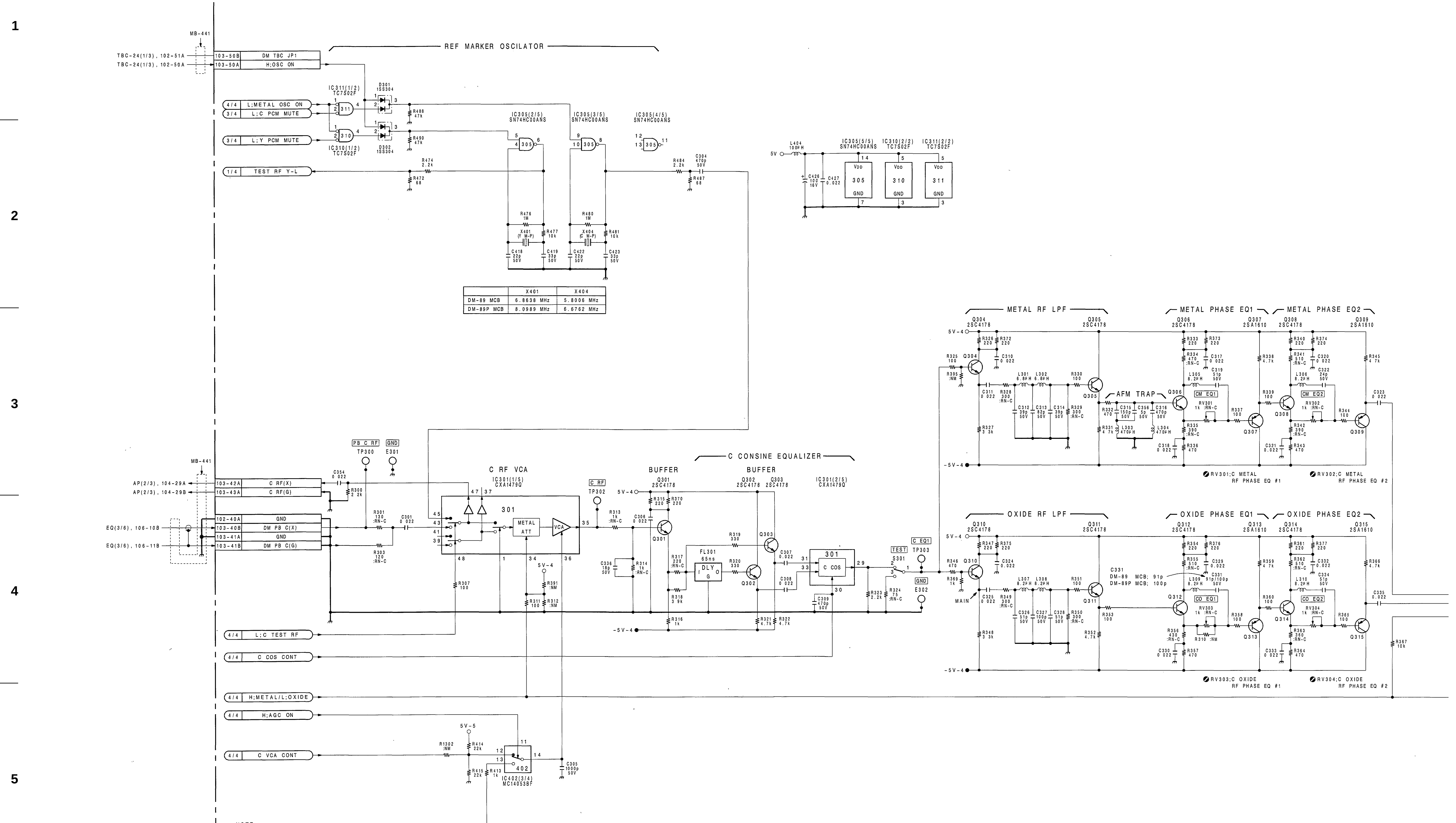

NOTE;
ALL RESISTORS ARE 1/10W UNLESS OTHERWISE NOTED.
ALL CAPACITORS ARE 25V UNLESS OTHERWISE NOTED.

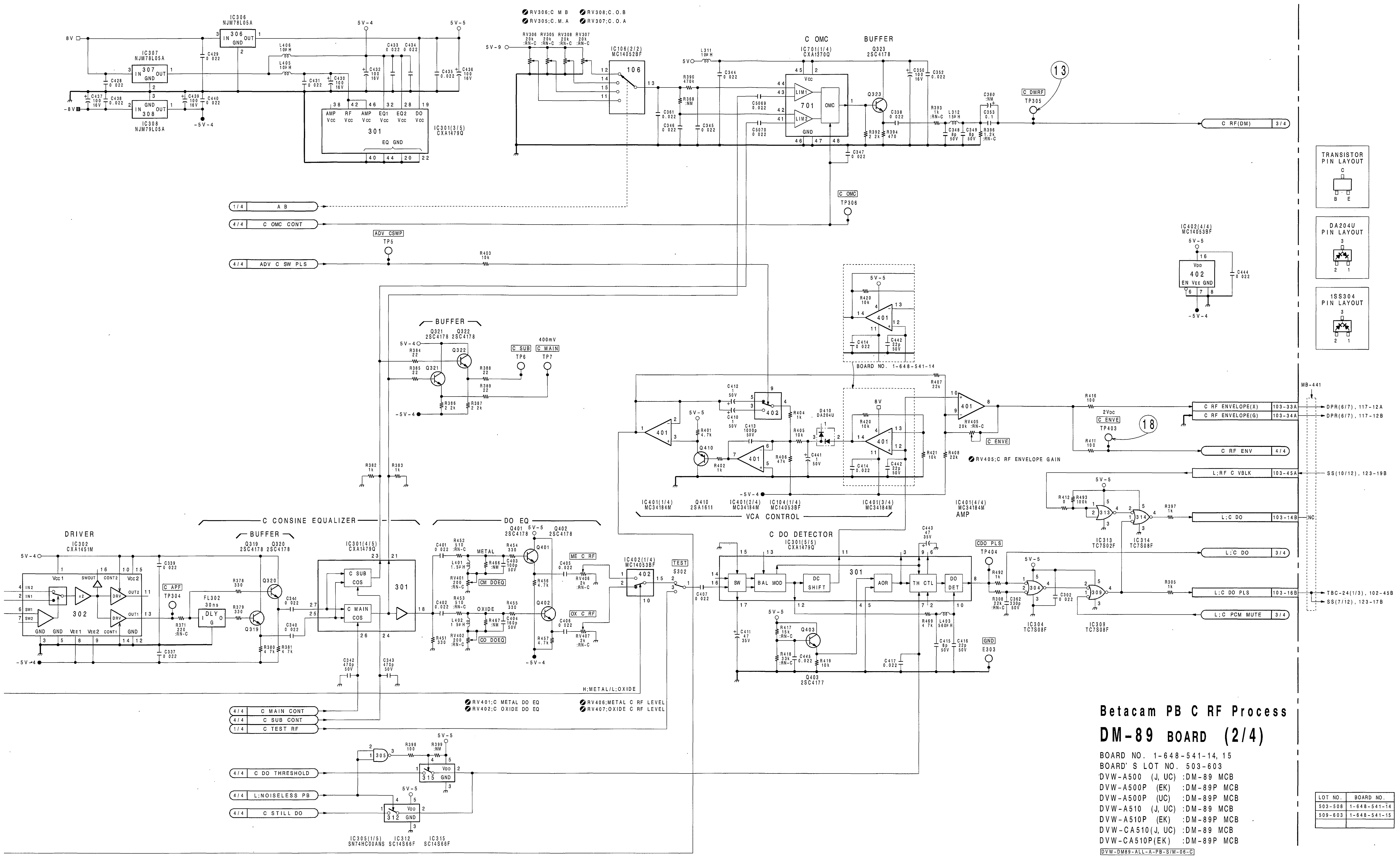

Betacam PB C RF Process

DM-89 BOARD (2/4)

BOARD NO. 1-648-541-14, 15
BOARD' S LOT NO. 503-603
DVW-A500 (J, UC) :DM-89 MCB
DVW-A500P (EK) :DM-89P MCB
DVW-A500P (UC) :DM-89P MCB
DVW-A510 (J, UC) :DM-89 MCB
DVW-A510P (EK) :DM-89P MCB
DVW-CA510(J, UC) :DM-89 MCB
DVW-CA510P(EK) :DM-89P MCB
DVW-DM89-ALL-A-PB-S/M-06-C

LOT NO.	BOARD NO.
503-508	1-648-541-14
509-603	1-648-541-15

DM-89 (3/4)

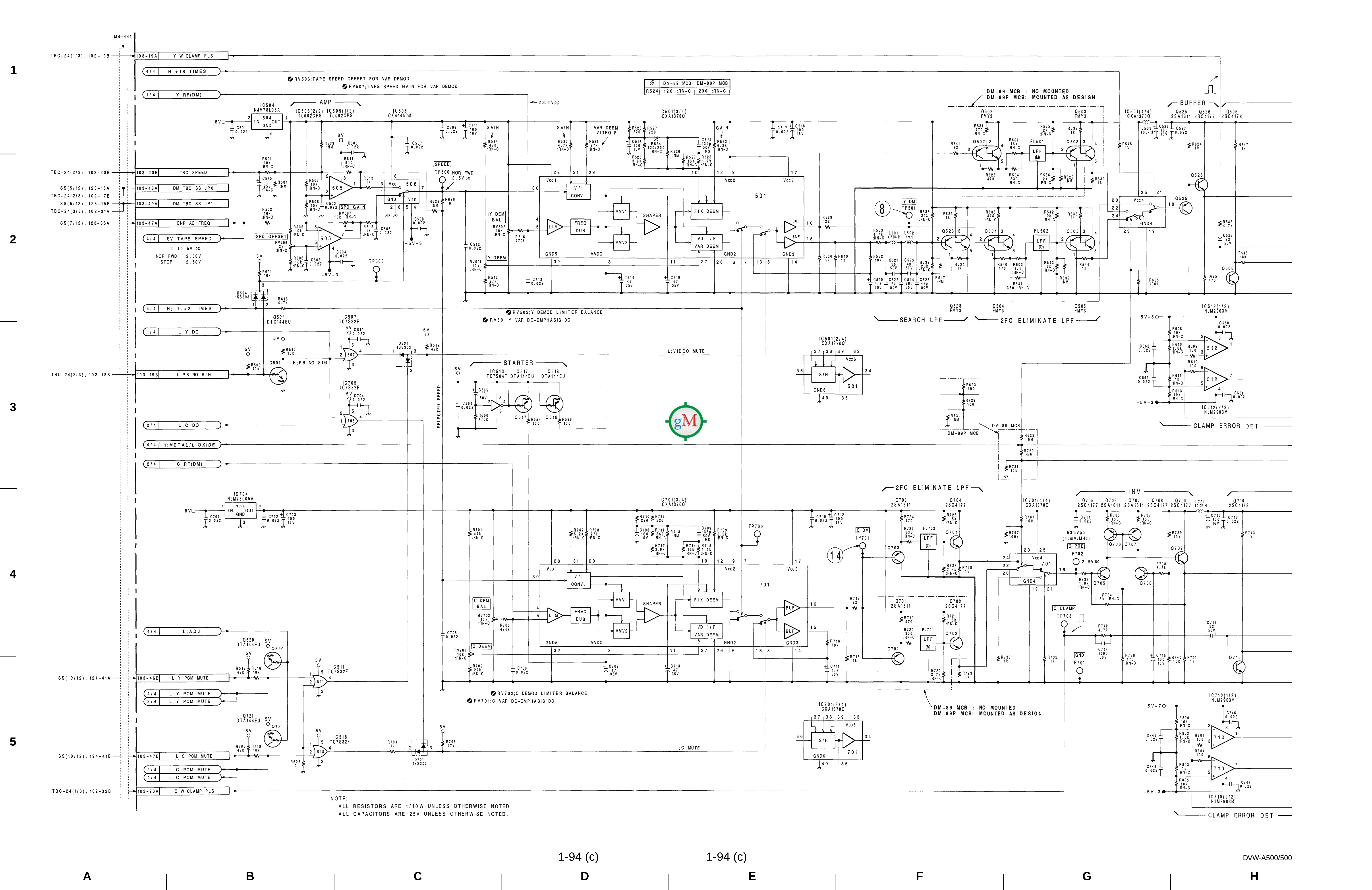
NOTE:
ALL RESISTORS ARE 1/10W UNLESS OTHERWISE NOTED.
ALL CAPACITORS ARE 25V UNLESS OTHERWISE NOTED.

1-94 (c)

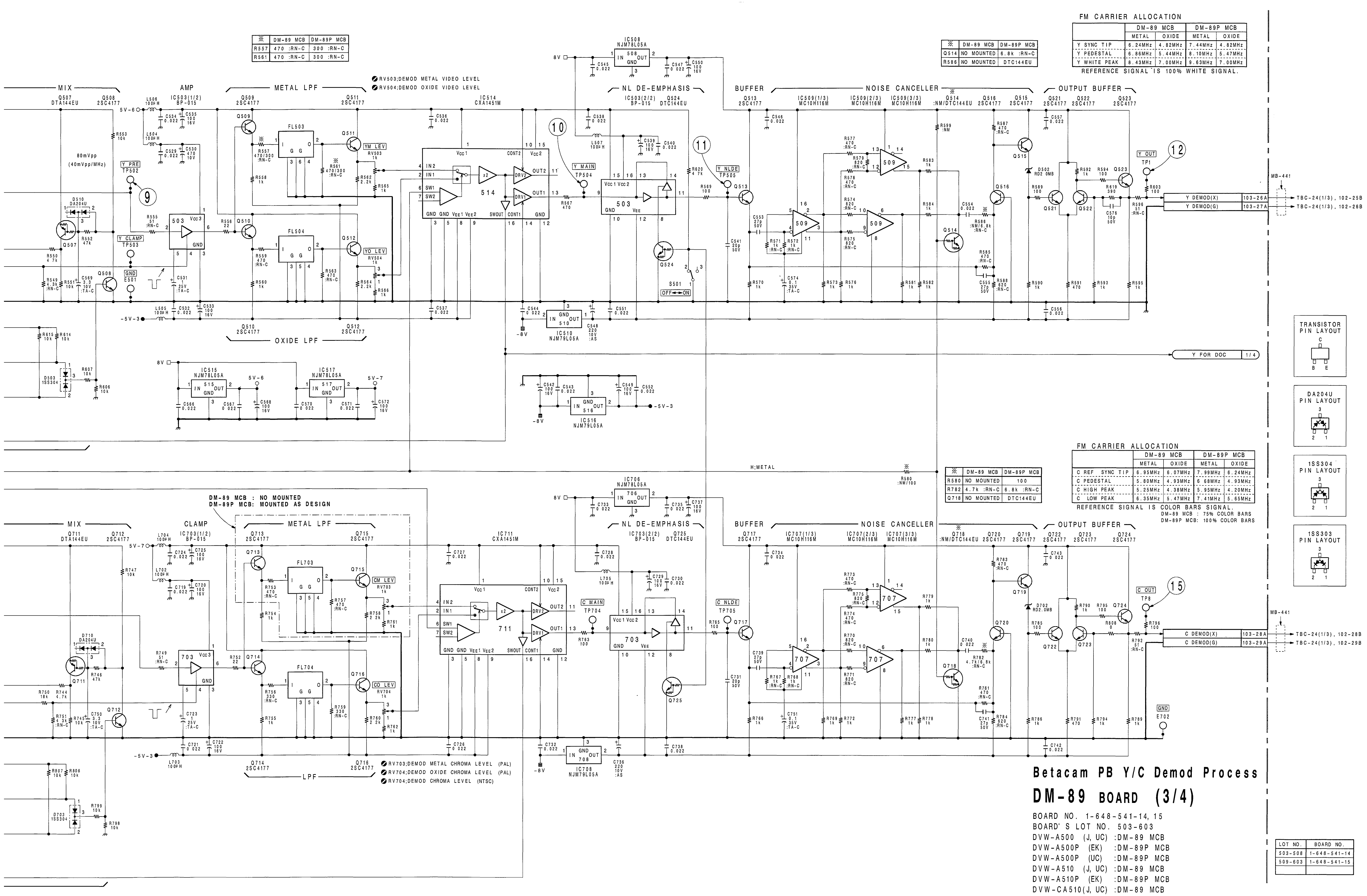

※	DM-89 MCB	DM-89P MCB
R557	470 :RN-C	300 :RN-C
R561	470 :RN-C	300 :RN-C

※	DM-89 MCB	DM-89P MCB
Q514	NO MOUNTED	6.8k :RN-C
R586	NO MOUNTED	DTC144EU

FM CARRIER ALLOCATION

	DM-89 MCB		DM-89P MCB	
	METAL	OXIDE	METAL	OXIDE
Y SYNC TIP	6.24MHz	4.82MHz	7.44MHz	4.82MHz
Y PEDESTAL	6.86MHz	5.44MHz	8.10MHz	5.47MHz
Y WHITE PEAK	8.43MHz	7.00MHz	9.63MHz	7.00MHz

REFERENCE SIGNAL IS 100% WHITE SIGNAL.

※	DM-89 MCB	DM-89P MCB
R580	NO MOUNTED	100
R782	4.7k :RN-C	6.8k :RN-C
Q718	NO MOUNTED	DTC144EU

FM CARRIER ALLOCATION

	DM-89 MCB		DM-89P MCB	
	METAL	OXIDE	METAL	OXIDE
C REF SYNC TIP	6.95MHz	6.07MHz	7.99MHz	6.24MHz
C PEDESTAL	5.80MHz	4.93MHz	6 68MHz	4.93MHz
C HIGH PEAK	5.25MHz	4.38MHz	5.95MHz	4.20MHz
C LOW PEAK	6.35MHz	5.47MHz	7.41MHz	5.65MHz

REFERENCE SIGNAL IS COLOR BARS SIGNAL.
DM-89 MCB : 75% COLOR BARS
DM-89P MCB: 100% COLOR BARS

Betacam PB Y/C Demod Process

DM-89 BOARD (3/4)

BOARD NO. 1-648-541-14, 15
BOARD' S LOT NO. 503-603
DVW-A500 (J, UC) :DM-89 MCB
DVW-A500P (EK) :DM-89P MCB
DVW-A500P (UC) :DM-89P MCB
DVW-A510 (J, UC) :DM-89 MCB
DVW-A510P (EK) :DM-89P MCB
DVW-CA510(J, UC) :DM-89 MCB
DVW-CA510P(EK) :DM-89P MCB

DVW-DM89-ALL-A-PB-S/M-06-C

LOT NO.	BOARD NO.
503-508	1-648-541-14
509-603	1-648-541-15

1
2
3
4
5

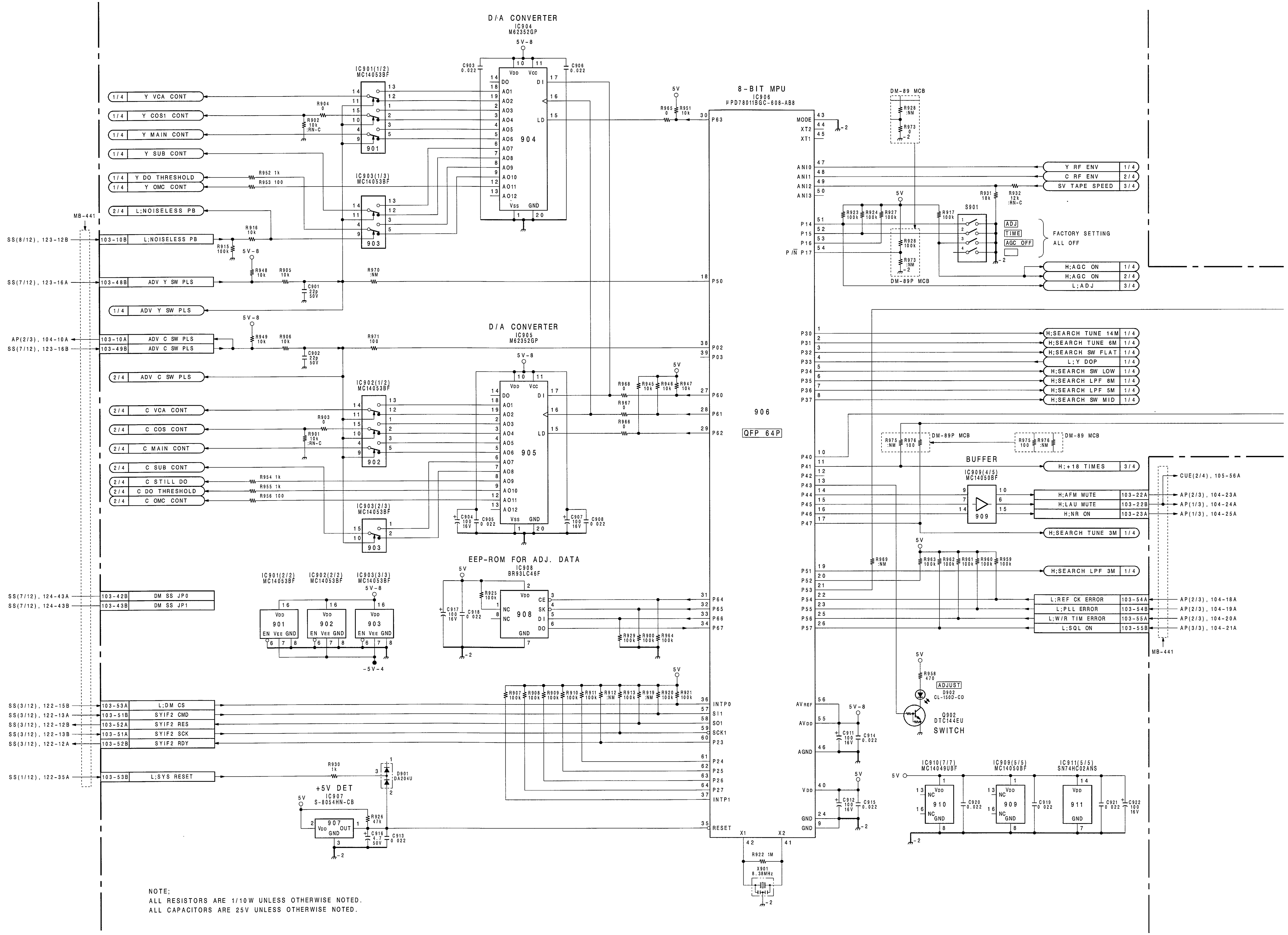
D/A CONVERTER
IC904
M62352GP
IC901(1/2)
MC14053BF
IC903(1/3)
MC14053BF
8-BIT MPU
IC906
µPD78011BGC-608-AB8
906
QFP 64P
D/A CONVERTER
IC905
M62352GP
IC902(1/2)
MC14053BF
IC903(2/3)
MC14053BF
EEP-ROM FOR ADJ. DATA
IC908
BR93LC46F
IC901(2/2)
MC14053BF
IC902(2/2)
MC14053BF
IC903(3/3)
MC14053BF
BUFFER
IC909(4/5)
MC14050BF
FACTORY SETTING
ALL OFF
+5V DET
IC907
S-8054HN-CB
D901
DA204U
D902
CL-150D-CD
Q902
DTC144EU
SWITCH
X901
8.38MHz
IC910(7/7)
MC14049UBF
IC909(5/5)
MC14050BF
IC911(5/5)
SN74HC02ANS
Y VCA CONT
Y COS1 CONT
Y MAIN CONT
Y SUB CONT
Y DO THRESHOLD
Y OMC CONT
L;NOISELESS PB
ADV Y SW PLS
ADV C SW PLS
C VCA CONT
C COS CONT
C MAIN CONT
C SUB CONT
C STILL DO
C DO THRESHOLD
C OMC CONT
DM SS JP0
DM SS JP1
L;DM CS
SYIF2 CMD
SYIF2 RES
SYIF2 SCK
SYIF2 RDY
L;SYS RESET
Y RF ENV
C RF ENV
SV TAPE SPEED
H;AGC ON
L;ADJ
H;SEARCH TUNE 14M
H;SEARCH TUNE 6M
H;SEARCH SW FLAT
L;Y DOP
H;SEARCH SW LOW
H;SEARCH LPF 8M
H;SEARCH LPF 5M
H;SEARCH SW MID
H;+18 TIMES
H;AFM MUTE
H;LAU MUTE
H;NR ON
H;SEARCH TUNE 3M
H;SEARCH LPF 3M
L;REF CK ERROR
L;PLL ERROR
L;W/R TIM ERROR
L;SQL ON
NOTE;
ALL RESISTORS ARE 1/10W UNLESS OTHERWISE NOTED.
ALL CAPACITORS ARE 25V UNLESS OTHERWISE NOTED.

 DM-89 (4/4)

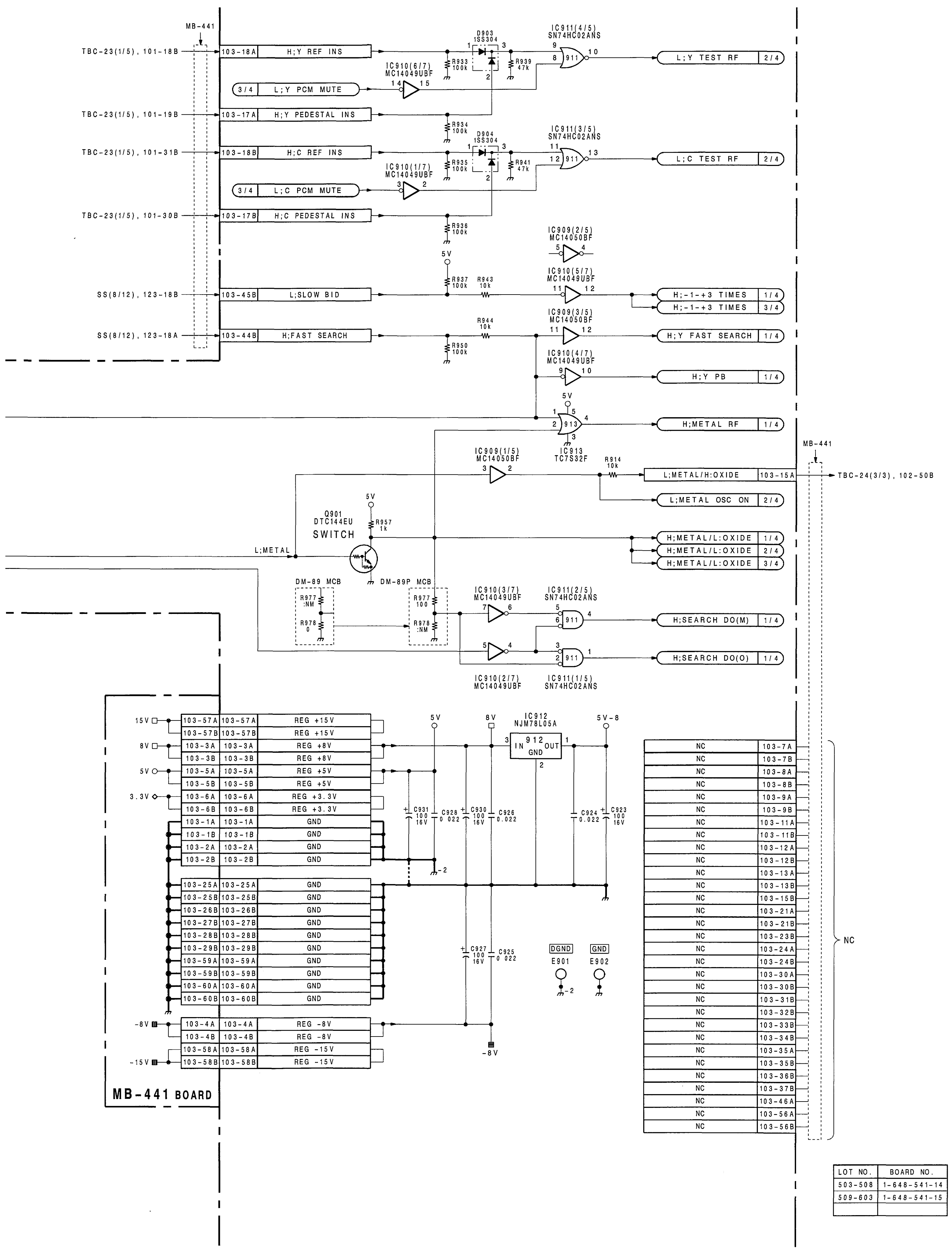

LOT NO.	BOARD NO.
503-508	1-648-541-14
509-603	1-648-541-15

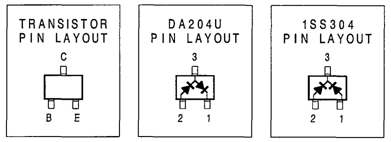

Betacam PB Control

DM-89 BOARD (4/4)

BOARD NO. 1-648-541-14, 15
BOARD' S LOT NO. 503-603
DVW-A500 (J, UC) :DM-89 MCB
DVW-A500P (EK) :DM-89P MCB
DVW-A500P (UC) :DM-89P MCB
DVW-A510 (J, UC) :DM-89 MCB
DVW-A510P (EK) :DM-89P MCB
DVW-CA510(J, UC) :DM-89 MCB
DVW-CA510P(EK) :DM-89P MCB

DVW-DM89-ALL-A-PB-S/M-06-C

1
2
3
4
5

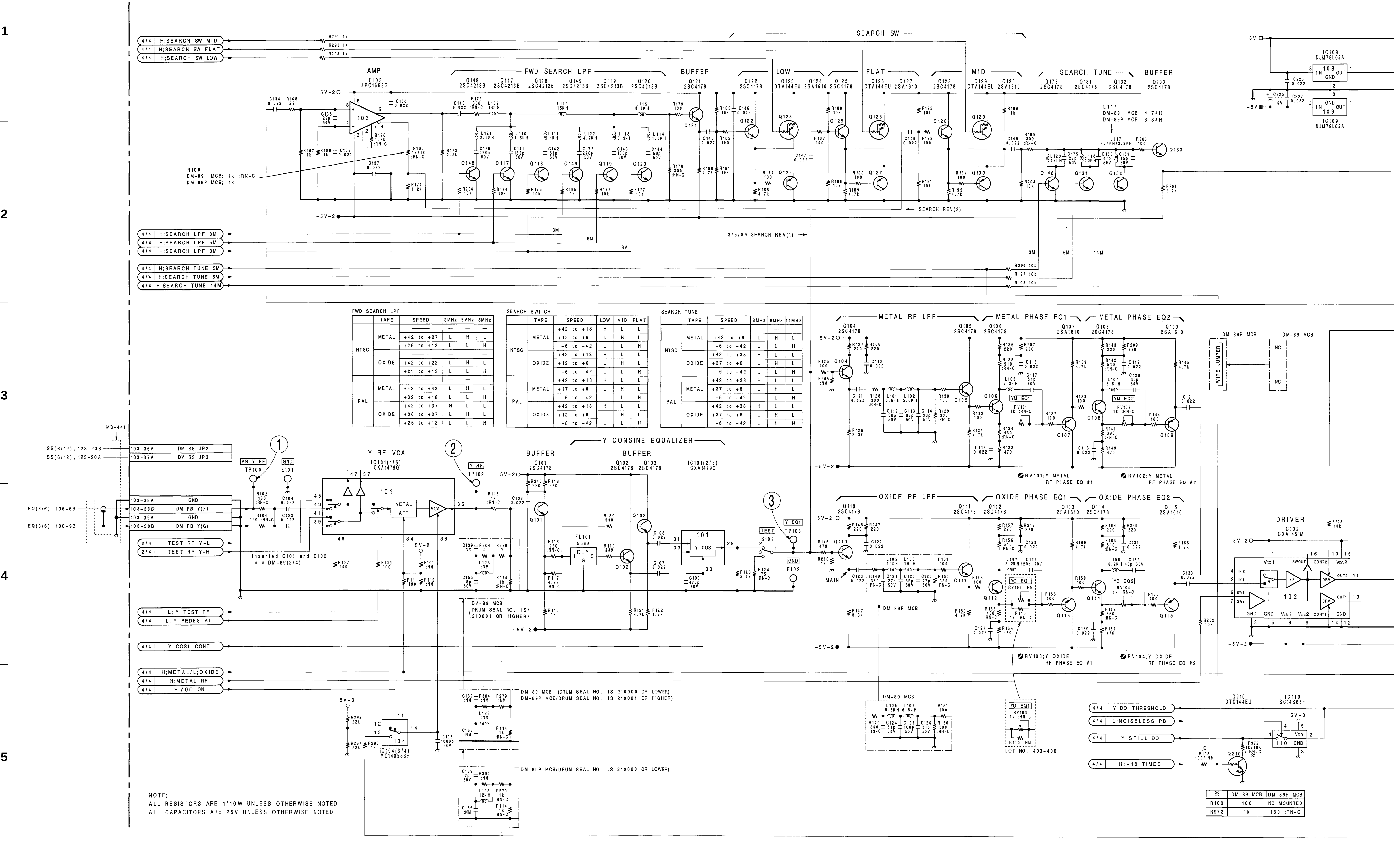

FWD SEARCH LPF

	TAPE	SPEED	3MHz	5MHz	8MHz
NTSC	METAL	———	—	—	—
		+42 to +27	L	H	L
		+26 to +13	L	L	H
	OXIDE	———	—	—	—
		+42 to +22	L	H	L
		+21 to +13	L	L	H
PAL	METAL	———	—	—	—
		+42 to +33	L	H	L
		+32 to +18	L	L	H
	OXIDE	+42 to +37	H	L	L
		+36 to +27	L	H	L
		+26 to +13	L	L	H

SEARCH SWITCH

	TAPE	SPEED	LOW	MID	FLAT
NTSC	METAL	+42 to +13	H	L	L
		+12 to +6	L	H	L
		-6 to -42	L	L	H
	OXIDE	+42 to +13	H	L	L
		+12 to +6	L	H	L
		-6 to -42	L	L	H
PAL	METAL	+42 to +18	H	L	L
		+17 to +6	L	H	L
		-6 to -42	L	L	H
	OXIDE	+42 to +13	H	L	L
		+12 to +6	L	H	L
		-6 to -42	L	L	H

SEARCH TUNE

	TAPE	SPEED	3MHz	6MHz	14MHz
NTSC	METAL	———	—	—	—
		+42 to +6	L	H	L
		-6 to -42	L	L	H
	OXIDE	+42 to +38	H	L	L
		+37 to +6	L	H	L
		-6 to -42	L	L	H
PAL	METAL	+42 to +38	H	L	L
		+37 to +6	L	H	L
		-6 to -42	L	L	H
	OXIDE	+42 to +38	H	L	L
		+37 to +6	L	H	L
		-6 to -42	L	L	H

※	DM-89 MCB	DM-89P MCB
R103	100	NO MOUNTED
R972	1k	180 :RN-C

NOTE;
ALL RESISTORS ARE 1/10W UNLESS OTHERWISE NOTED.
ALL CAPACITORS ARE 25V UNLESS OTHERWISE NOTED.

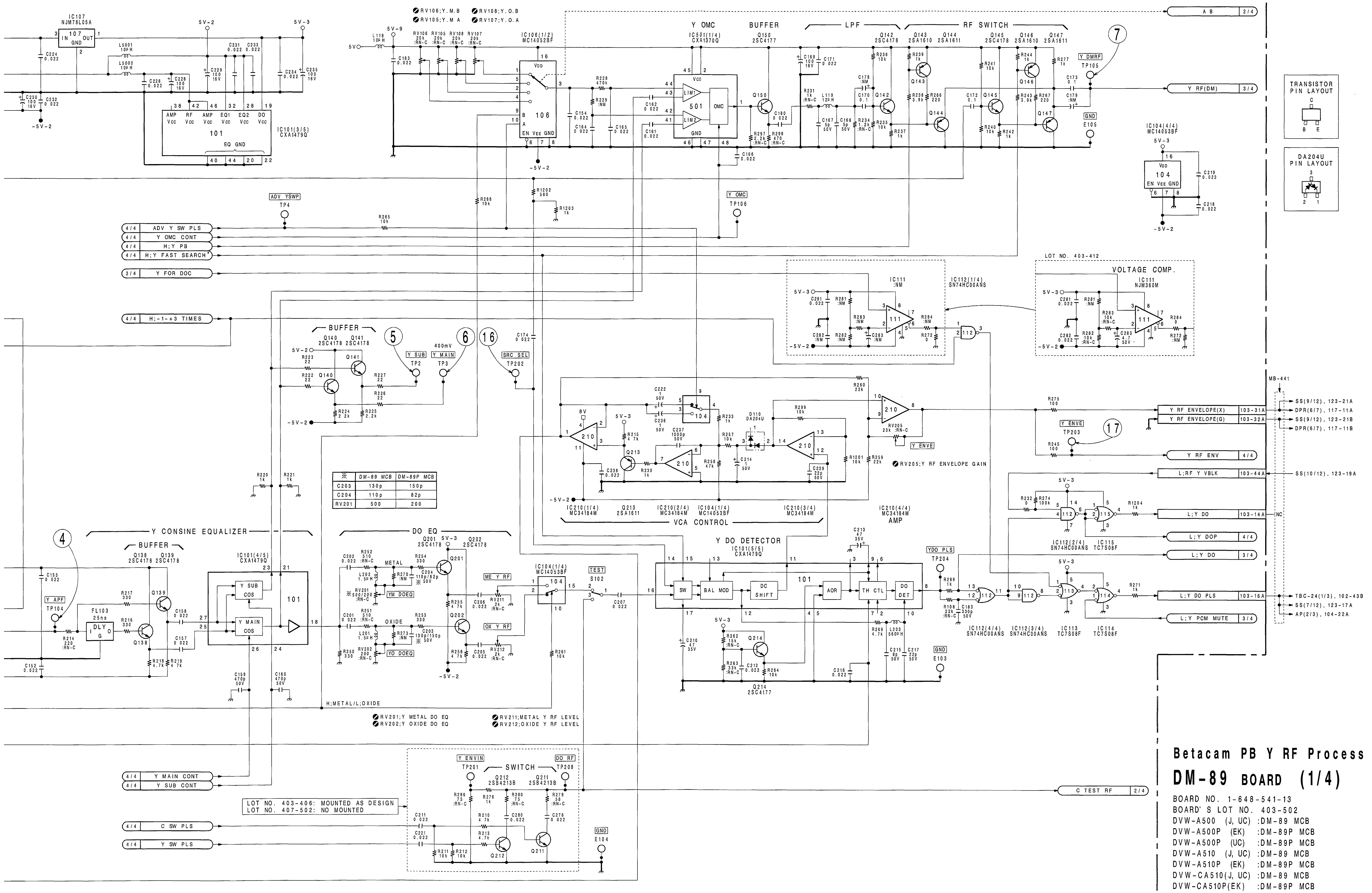

※	DM-89 MCB	DM-89P MCB
C203	130p	150p
C204	110p	82p
RV201	500	200

Betacam PB Y RF Process

DM-89 BOARD (1/4)

BOARD NO. 1-648-541-13
BOARD' S LOT NO. 403-502
DVW-A500 (J, UC) :DM-89 MCB
DVW-A500P (EK) :DM-89P MCB
DVW-A500P (UC) :DM-89P MCB
DVW-A510 (J, UC) :DM-89 MCB
DVW-A510P (EK) :DM-89P MCB
DVW-CA510(J, UC) :DM-89 MCB
DVW-CA510P(EK) :DM-89P MCB

DVW-DM89-ALL-A-PB-S/M-06-B

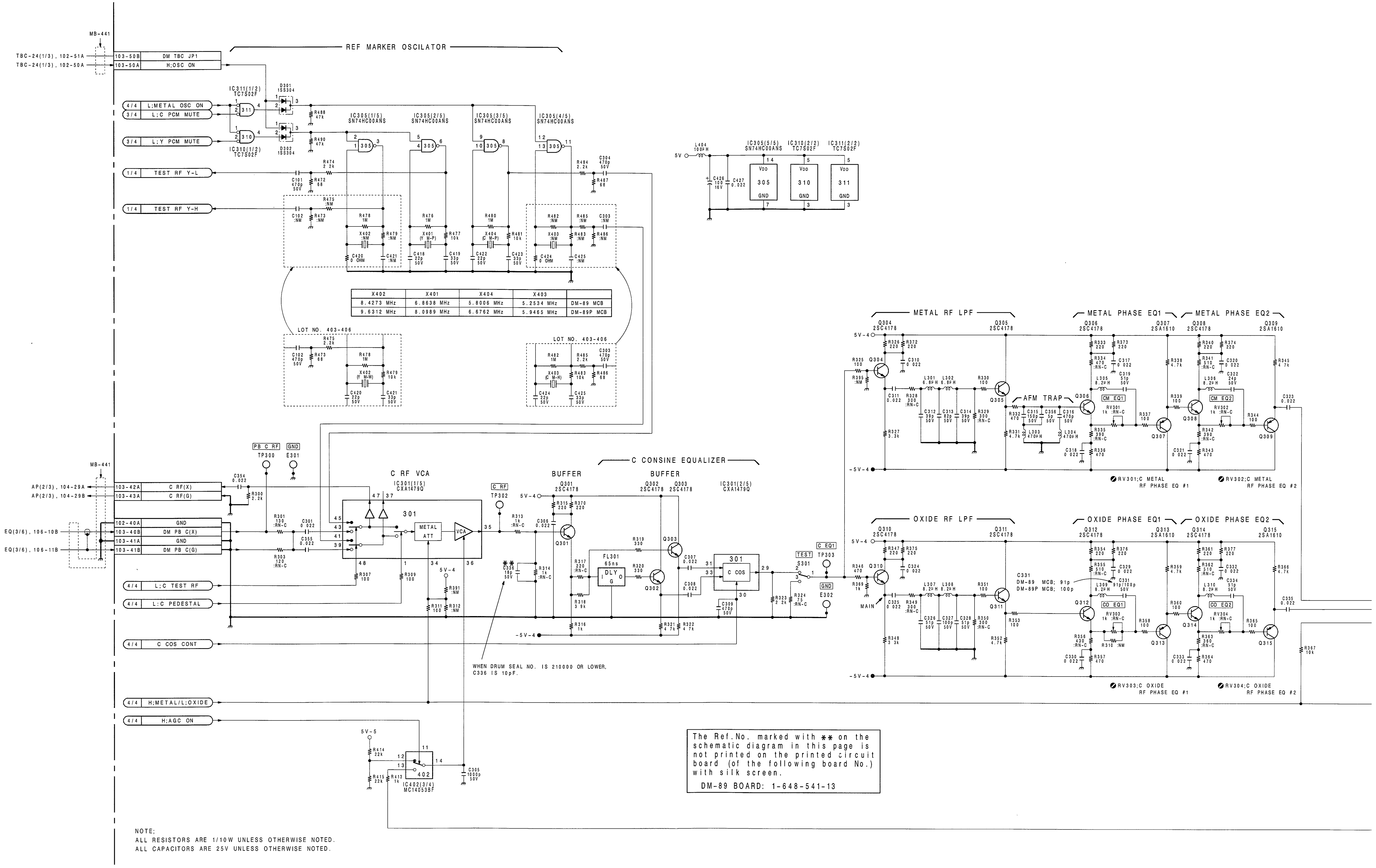

X402	X401	X404	X403	
8.4273 MHz	6.8638 MHz	5.8006 MHz	5.2534 MHz	DM-89 MCB
9.6312 MHz	8.0989 MHz	6.6762 MHz	5.9465 MHz	DM-89P MCB

The Ref.No. marked with ✱✱ on the schematic diagram in this page is not printed on the printed circuit board (of the following board No.) with silk screen.

DM-89 BOARD: 1-648-541-13

NOTE;
ALL RESISTORS ARE 1/10W UNLESS OTHERWISE NOTED.
ALL CAPACITORS ARE 25V UNLESS OTHERWISE NOTED.

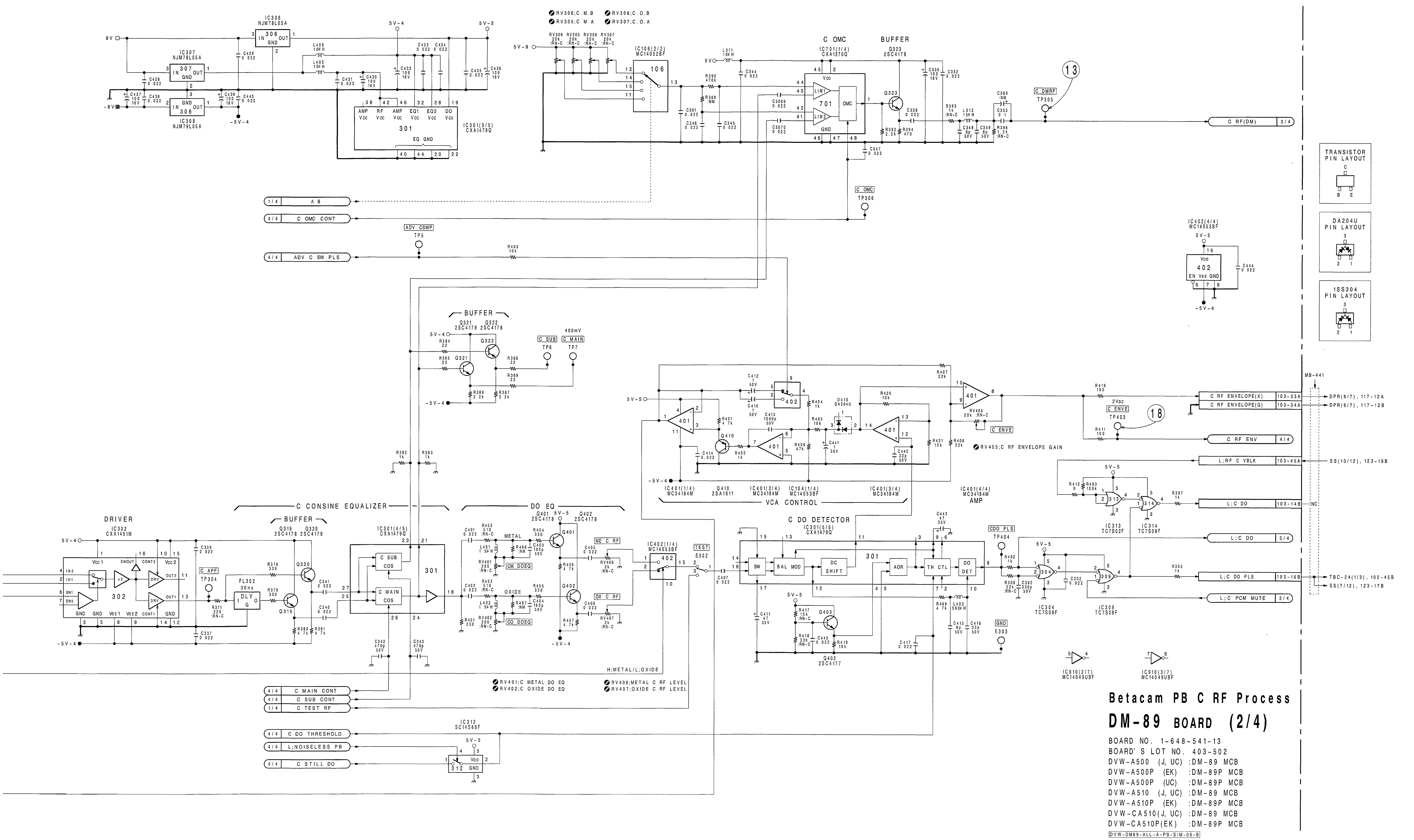

Betacam PB C RF Process

DM-89 BOARD (2/4)

BOARD NO. 1-648-541-13
BOARD' S LOT NO. 403-502
DVW-A500 (J, UC) :DM-89 MCB
DVW-A500P (EK) :DM-89P MCB
DVW-A500P (UC) :DM-89P MCB
DVW-A510 (J, UC) :DM-89 MCB
DVW-A510P (EK) :DM-89P MCB
DVW-CA510(J, UC) :DM-89 MCB
DVW-CA510P(EK) :DM-89P MCB

DVW-DM89-ALL-A-PB-S/M-06-B

I J K L M N O P

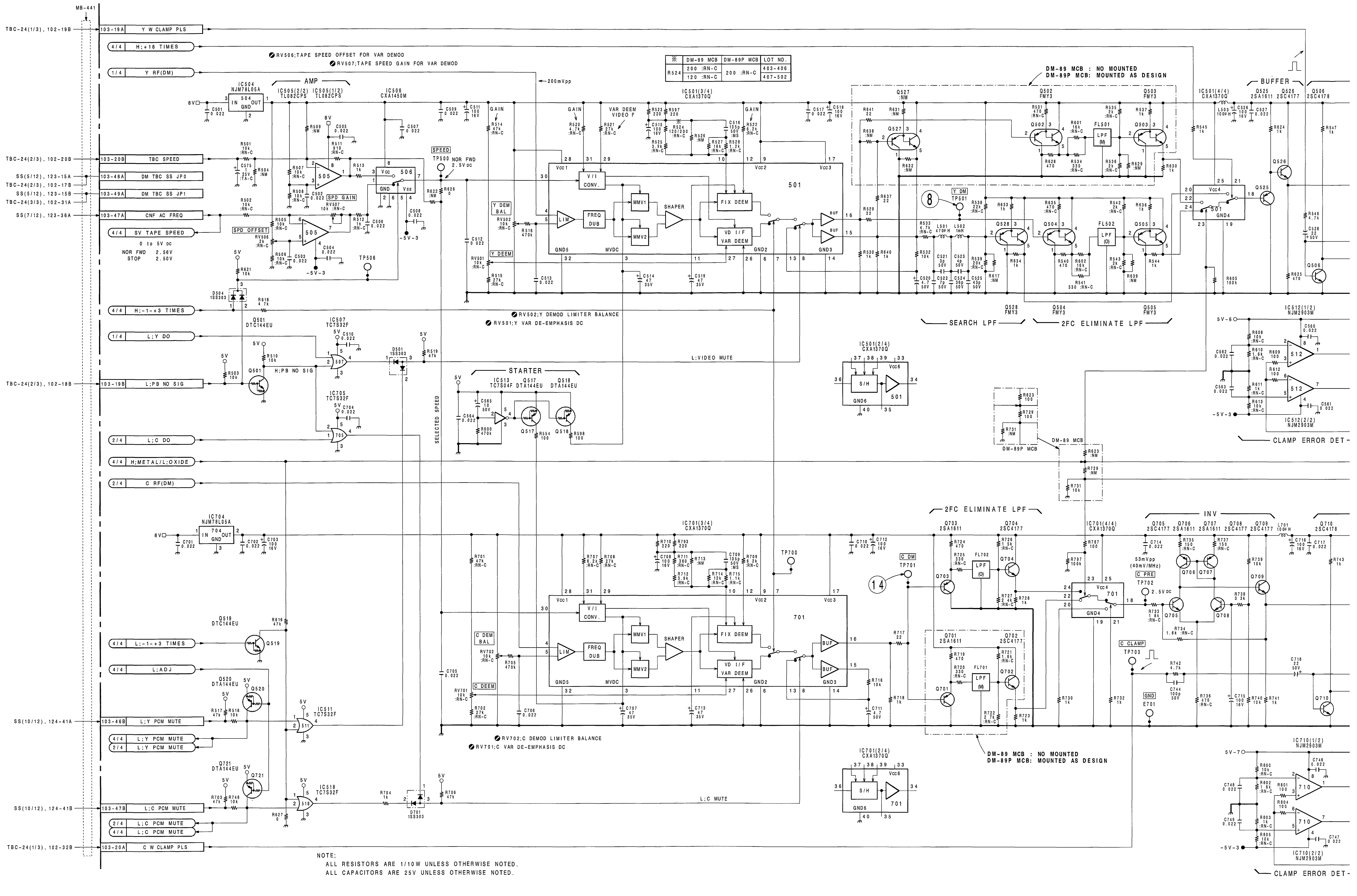

NOTE;
ALL RESISTORS ARE 1/10W UNLESS OTHERWISE NOTED.
ALL CAPACITORS ARE 25V UNLESS OTHERWISE NOTED.

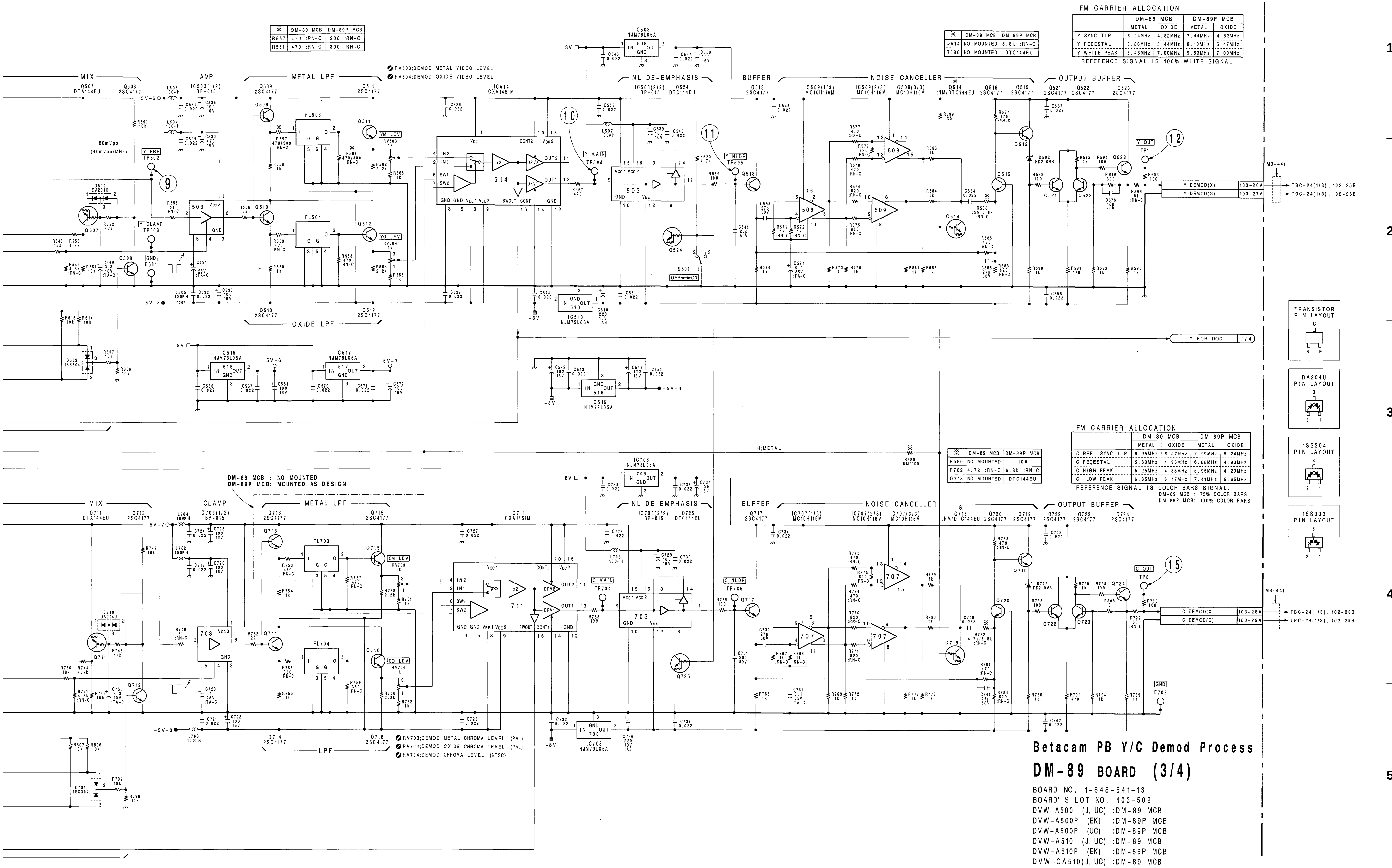

※	DM-89 MCB	DM-89P MCB
R557	470 :RN-C	300 :RN-C
R561	470 :RN-C	300 :RN-C

※	DM-89 MCB	DM-89P MCB
Q514	NO MOUNTED	6.8k :RN-C
R586	NO MOUNTED	DTC144EU

FM CARRIER ALLOCATION

	DM-89 MCB		DM-89P MCB	
	METAL	OXIDE	METAL	OXIDE
Y SYNC TIP	6.24MHz	4.82MHz	7.44MHz	4.82MHz
Y PEDESTAL	6.86MHz	5 44MHz	8.10MHz	5.47MHz
Y WHITE PEAK	8.43MHz	7.00MHz	9.63MHz	7.00MHz

REFERENCE SIGNAL IS 100% WHITE SIGNAL.

※	DM-89 MCB	DM-89P MCB
R580	NO MOUNTED	100
R782	4.7k :RN-C	6.8k :RN-C
Q718	NO MOUNTED	DTC144EU

FM CARRIER ALLOCATION

	DM-89 MCB		DM-89P MCB	
	METAL	OXIDE	METAL	OXIDE
C REF. SYNC TIP	6.95MHz	6.07MHz	7 99MHz	6.24MHz
C PEDESTAL	5.80MHz	4.93MHz	6.68MHz	4.93MHz
C HIGH PEAK	5.25MHz	4.38MHz	5.95MHz	4.20MHz
C LOW PEAK	6.35MHz	5.47MHz	7.41MHz	5.65MHz

REFERENCE SIGNAL IS COLOR BARS SIGNAL.
DM-89 MCB : 75% COLOR BARS
DM-89P MCB: 100% COLOR BARS

Betacam PB Y/C Demod Process

DM-89 BOARD (3/4)

BOARD NO. 1-648-541-13
BOARD' S LOT NO. 403-502
DVW-A500 (J, UC) :DM-89 MCB
DVW-A500P (EK) :DM-89P MCB
DVW-A500P (UC) :DM-89P MCB
DVW-A510 (J, UC) :DM-89 MCB
DVW-A510P (EK) :DM-89P MCB
DVW-CA510(J, UC) :DM-89 MCB
DVW-CA510P(EK) :DM-89P MCB

DVW-DM89-ALL-A-PB-S/M-06-B

I J K L M N O P

 DM-89 (4/4)

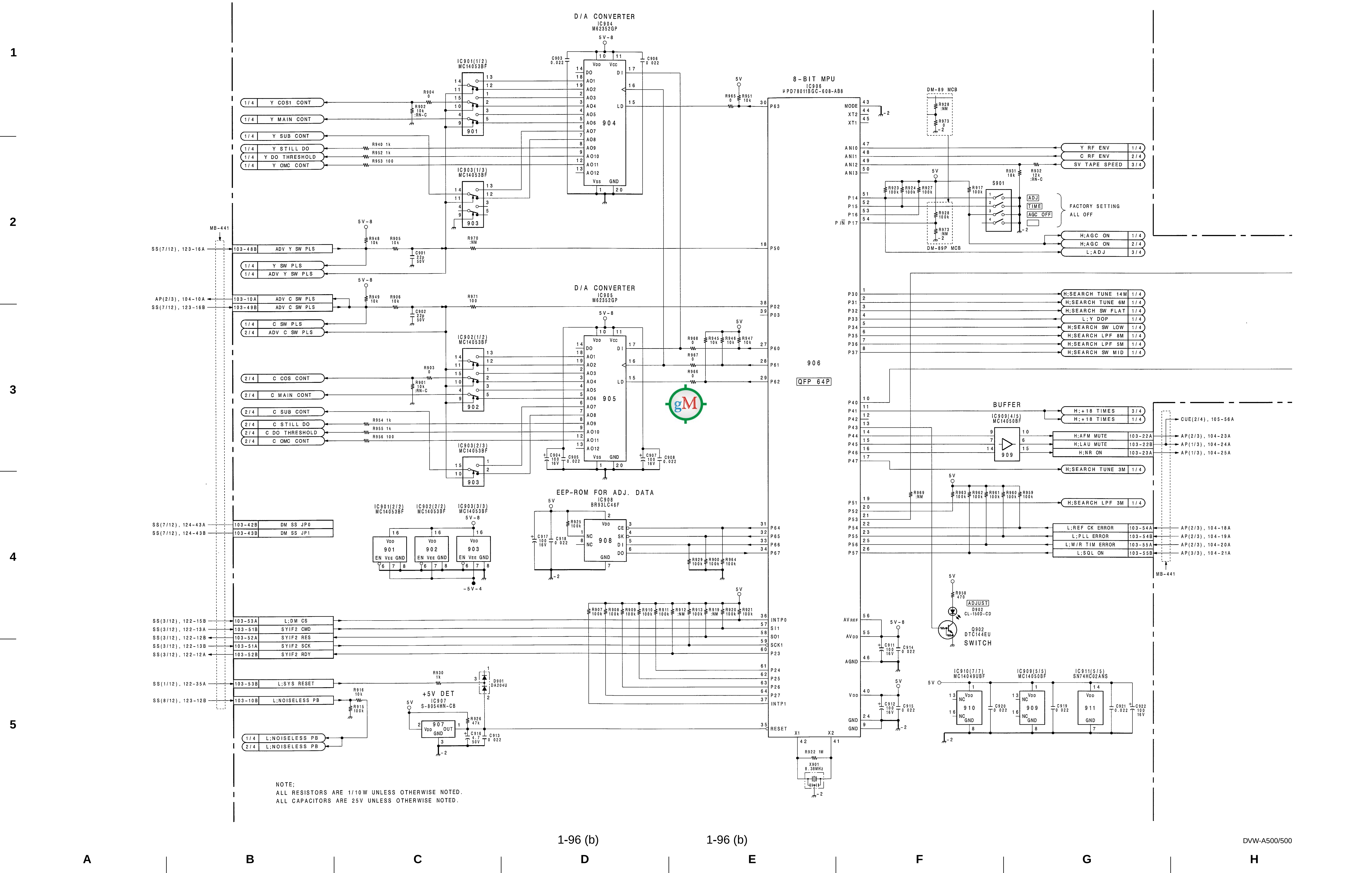
D/A CONVERTER
IC904
M62352GP
D/A CONVERTER
IC905
M62352GP
8-BIT MPU
IC906
μPD78011BGC-608-AB8
EEP-ROM FOR ADJ. DATA
IC908
BR93LC46F
BUFFER
IC909(4/5)
MC14050BF
+5V DET
IC907
S-8054HN-CB
FACTORY SETTING
ALL OFF
SWITCH
NOTE;
ALL RESISTORS ARE 1/10W UNLESS OTHERWISE NOTED.
ALL CAPACITORS ARE 25V UNLESS OTHERWISE NOTED.

 1-96 (b)

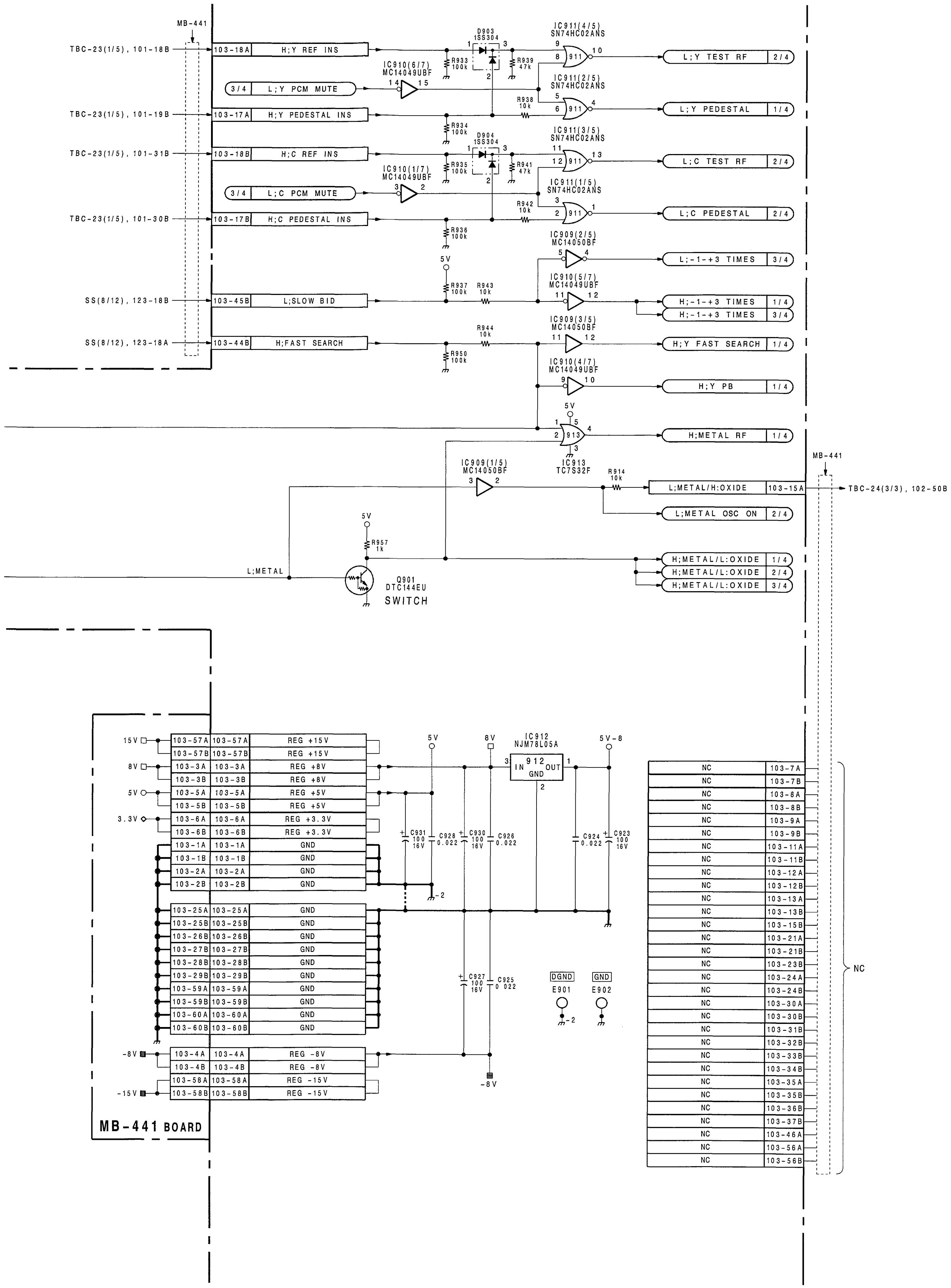

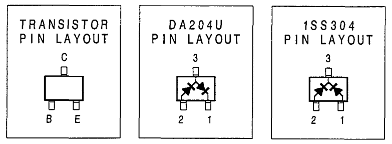

Betacam PB Control

DM-89 BOARD (4/4)

BOARD NO. 1-648-541-13
BOARD' S LOT NO. 403-502
DVW-A500 (J, UC) :DM-89 MCB
DVW-A500P (EK) :DM-89P MCB
DVW-A500P (UC) :DM-89P MCB
DVW-A510 (J, UC) :DM-89 MCB
DVW-A510P (EK) :DM-89P MCB
DVW-CA510(J, UC) :DM-89 MCB
DVW-CA510P(EK) :DM-89P MCB
DVW-DM89-ALL-A-PB-S/M-06-B

1
2
3
4
5

DM-89 (1/4)

LOT NO. 302-303

SEARCH LPF

TAPE	SPEED	5MHz	8MHz
METAL			
	+42 to +37	H	L
	+36 to +27	L	H
OXIDE			
	+42 to +32	H	L
	+31 to +19	L	H

SEARCH SWITCH

TAPE	SPEED	LOW	MID	FLAT
METAL	+42 to +27	H	L	L
	+26 to +12	L	H	L
	-13 to -42	L	L	H
OXIDE	+42 to +19	H	L	L
	+18 to -17	L	H	L
	-18 to -42	L	L	H

SEARCH TUNE

TAPE	SPEED	3MHz	6MHz	14MHz
METAL	+42 to +38	H	L	L
	+37 to +19	L	H	L
	+18 to -42	L	L	H
OXIDE	+42 to +35	H	L	L
	+34 to +19	L	H	L
	+18 to -42	L	L	H

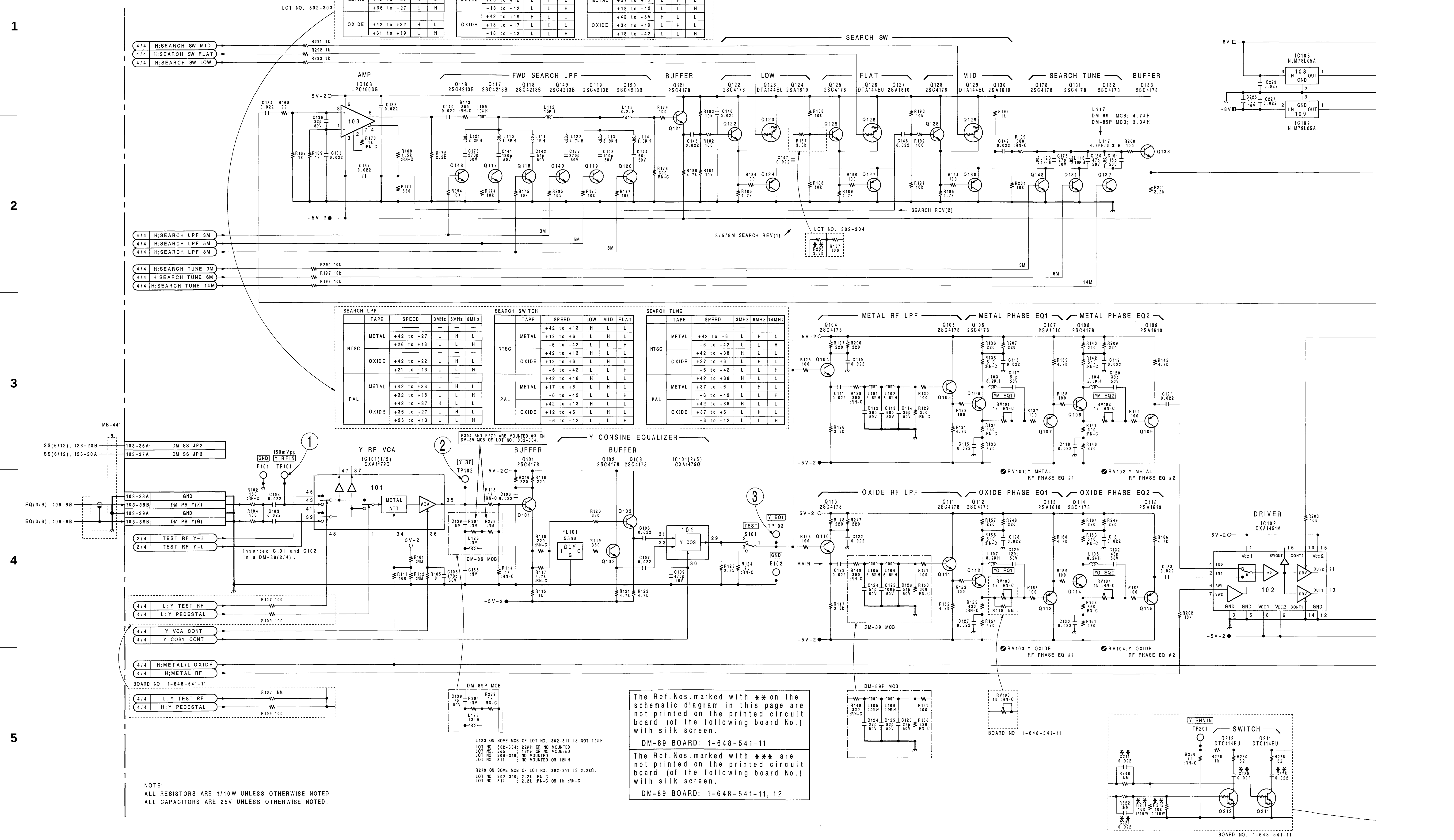

SEARCH LPF

	TAPE	SPEED	3MHz	5MHz	8MHz
NTSC	METAL	———	—	—	—
		+42 to +27	L	H	L
		+26 to +13	L	L	H
	OXIDE	———	—	—	—
		+42 to +22	L	H	L
		+21 to +13	L	L	H
PAL	METAL	———	—	—	—
		+42 to +33	L	H	L
		+32 to +18	L	L	H
	OXIDE	+42 to +37	H	L	L
		+36 to +27	L	H	L
		+26 to +13	L	L	H

SEARCH SWITCH

	TAPE	SPEED	LOW	MID	FLAT
NTSC	METAL	+42 to +13	H	L	L
		+12 to +6	L	H	L
		-6 to -42	L	L	H
	OXIDE	+42 to +13	H	L	L
		+12 to +6	L	H	L
		-6 to -42	L	L	H
PAL	METAL	+42 to +18	H	L	L
		+17 to +6	L	H	L
		-6 to -42	L	L	H
	OXIDE	+42 to +13	H	L	L
		+12 to +6	L	H	L
		-6 to -42	L	L	H

SEARCH TUNE

	TAPE	SPEED	3MHz	6MHz	14MHz
NTSC	METAL	———	—	—	—
		+42 to +6	L	H	L
		-6 to -42	L	L	H
	OXIDE	+42 to +38	H	L	L
		+37 to +6	L	H	L
		-6 to -42	L	L	H
PAL	METAL	+42 to +38	H	L	L
		+37 to +6	L	H	L
		-6 to -42	L	L	H
	OXIDE	+42 to +38	H	L	L
		+37 to +6	L	H	L
		-6 to -42	L	L	H

L123 ON SOME MCB OF LOT NO. 302-311 IS NOT 12μH.
LOT NO 302-304; 22μH OR NO MOUNTED
LOT NO. 305 ; 18μH OR NO MOUNTED
LOT NO 306-310; NO MOUNTED
LOT NO 311 ; NO MOUNTED OR 12μH

R279 ON SOME MCB OF LOT NO. 302-311 IS 2.2kΩ.
LOT NO. 302-310; 2.2k :RN-C
LOT NO 311 ; 2.2k :RN-C OR 1k :RN-C

The Ref.Nos.marked with ** on the schematic diagram in this page are not printed on the printed circuit board (of the following board No.) with silk screen.

DM-89 BOARD: 1-648-541-11

The Ref.Nos.marked with *** are not printed on the printed circuit board (of the following board No.) with silk screen.

DM-89 BOARD: 1-648-541-11, 12

NOTE;
ALL RESISTORS ARE 1/10W UNLESS OTHERWISE NOTED.
ALL CAPACITORS ARE 25V UNLESS OTHERWISE NOTED.

1-90 (a)

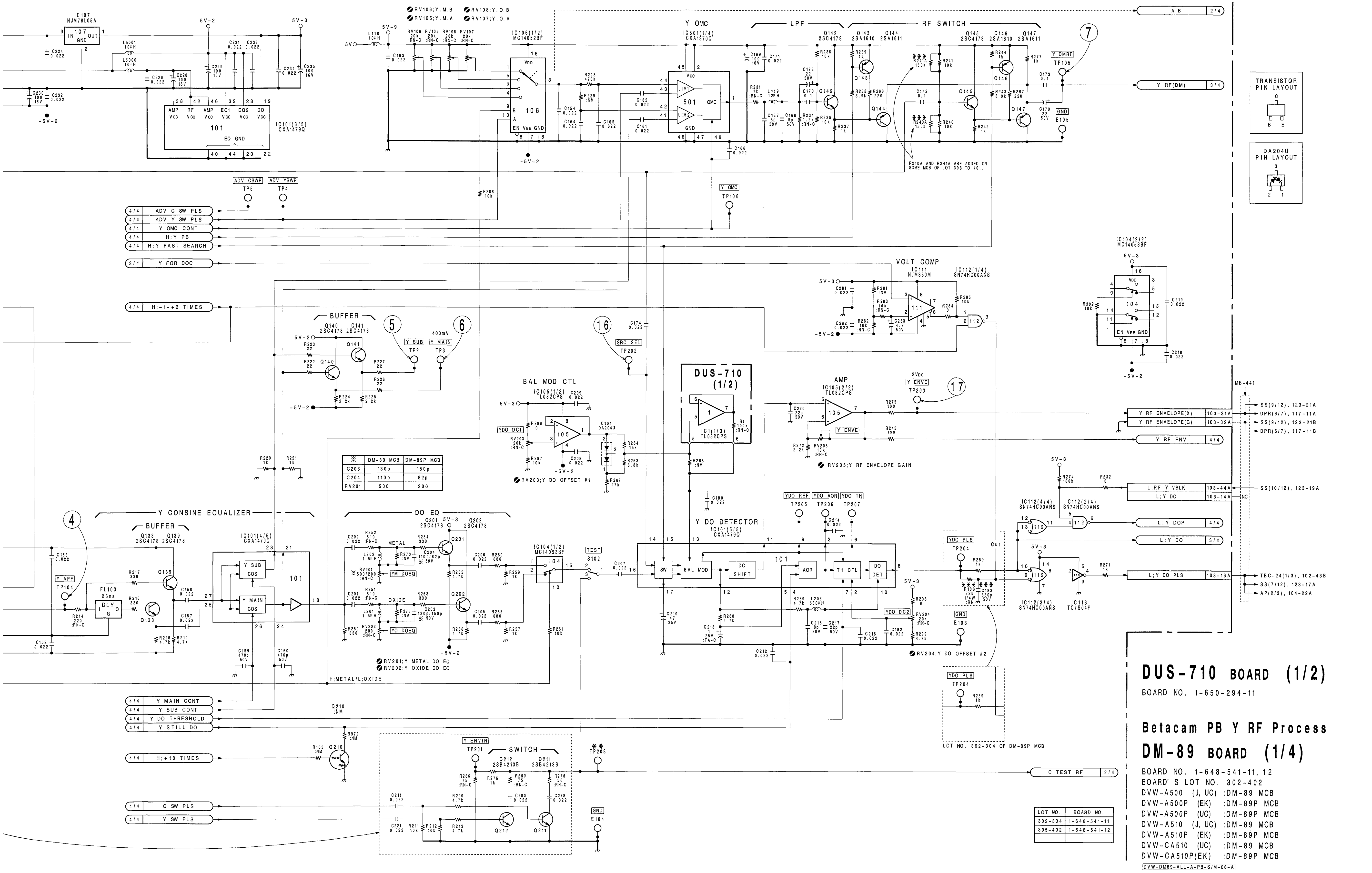

※	DM-89 MCB	DM-89P MCB
C203	130p	150p
C204	110p	82p
RV201	500	200

LOT NO.	BOARD NO.
302-304	1-648-541-11
305-402	1-648-541-12

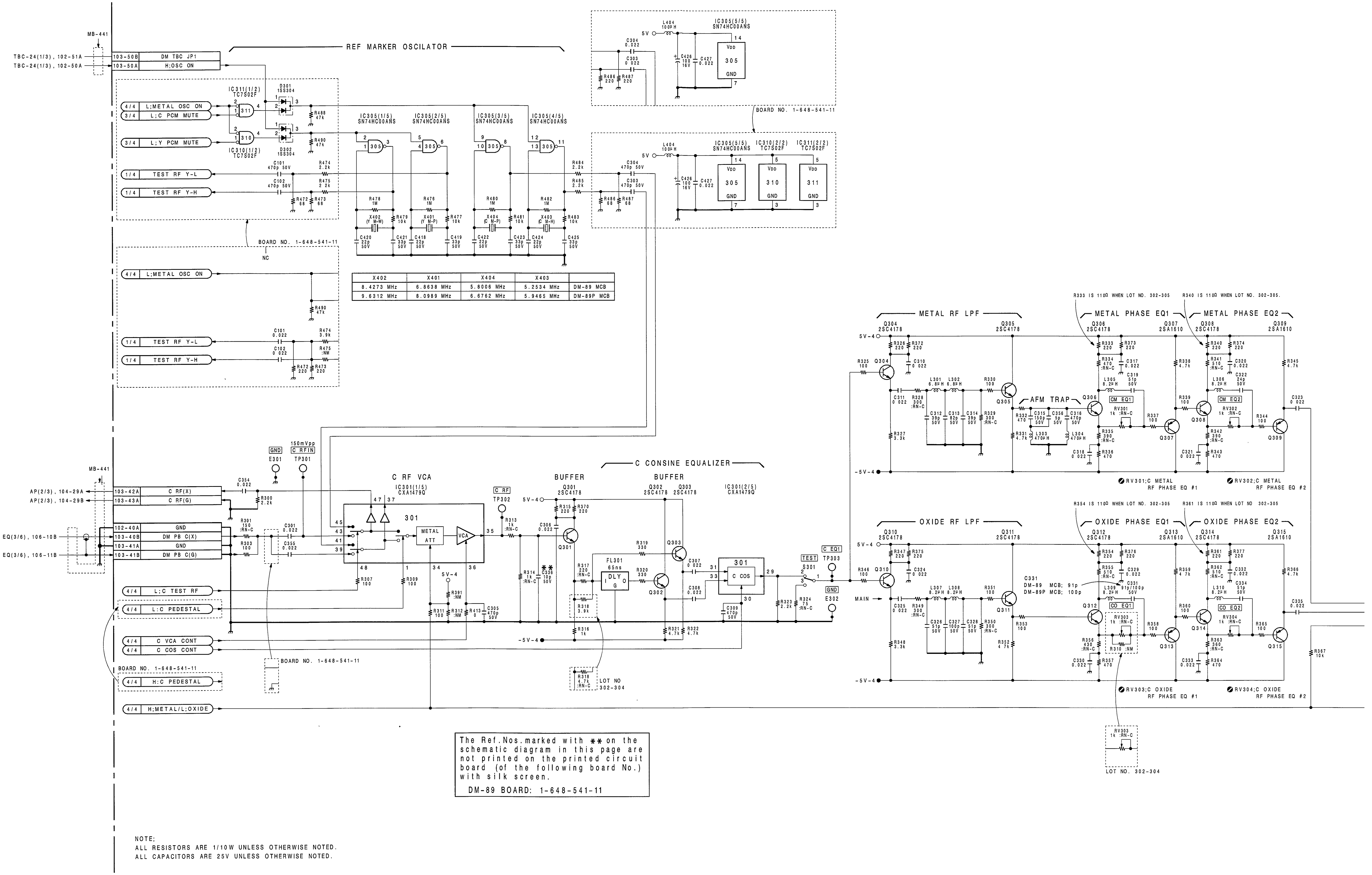

X402	X401	X404	X403	
8.4273 MHz	6.8638 MHz	5.8006 MHz	5.2534 MHz	DM-89 MCB
9.6312 MHz	8.0989 MHz	6.6762 MHz	5.9465 MHz	DM-89P MCB

The Ref.Nos.marked with ** on the schematic diagram in this page are not printed on the printed circuit board (of the following board No.) with silk screen.

DM-89 BOARD: 1-648-541-11

NOTE;
ALL RESISTORS ARE 1/10W UNLESS OTHERWISE NOTED.
ALL CAPACITORS ARE 25V UNLESS OTHERWISE NOTED.

http://getMANUAL.com

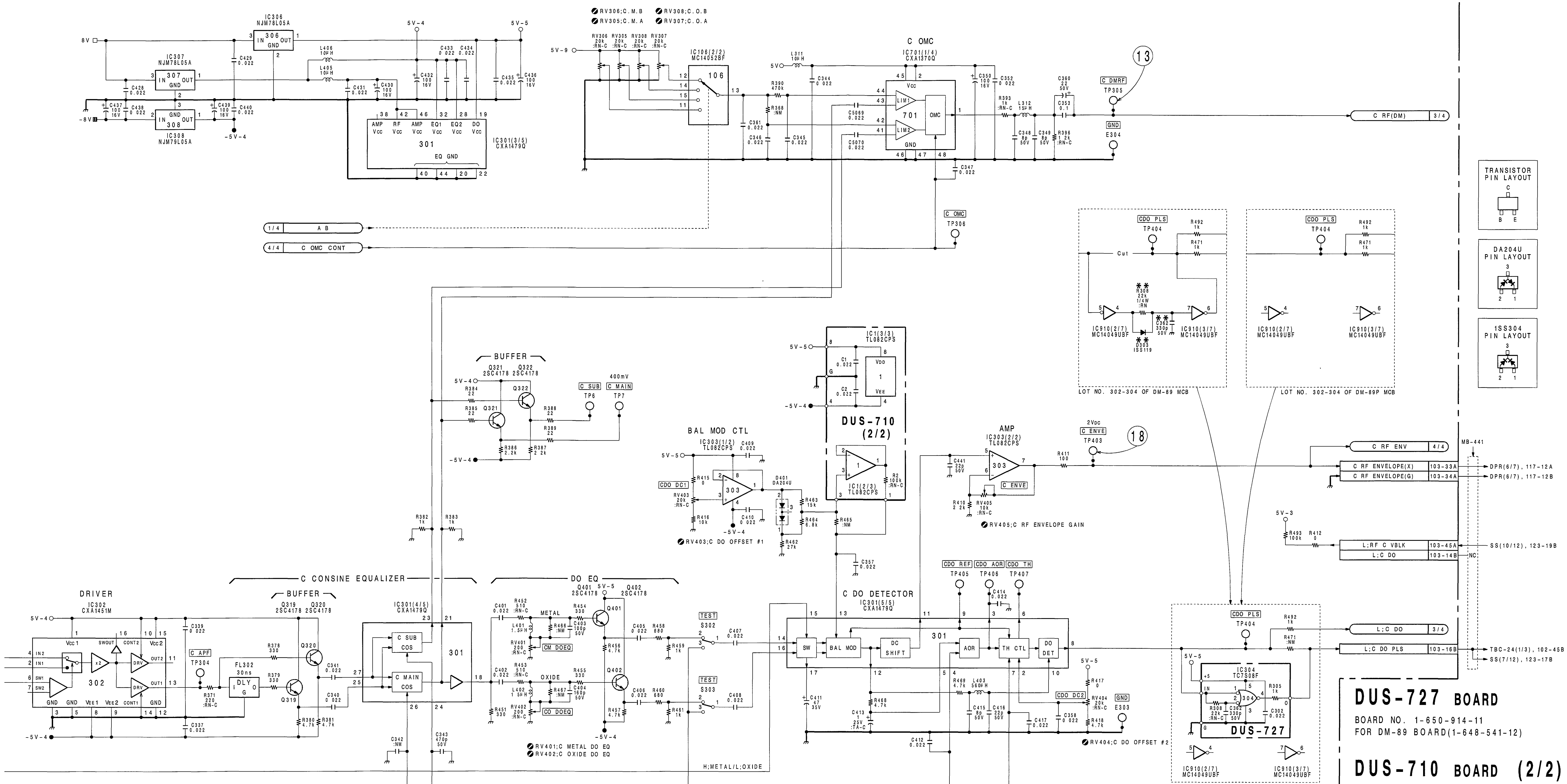

1 2 3 4 5

DUS-727 BOARD

BOARD NO. 1-650-914-11
FOR DM-89 BOARD(1-648-541-12)

DUS-710 BOARD (2/2)

BOARD NO. 1-650-294-11

Betacam PB C RF Process

DM-89 BOARD (2/4)

BOARD NO. 1-648-541-11, 12
BOARD' S LOT NO. 302-402
DVW-A500 (J, UC) :DM-89 MCB
DVW-A500P (EK) :DM-89P MCB
DVW-A500P (UC) :DM-89P MCB
DVW-A510 (J, UC) :DM-89 MCB
DVW-A510P (EK) :DM-89P MCB
DVW-CA510 (UC) :DM-89 MCB
DVW-CA510P(EK) :DM-89P MCB

LOT NO.	BOARD NO.
302-304	1-648-541-11
305-402	1-648-541-12

DVW-DM89-ALL-A-PB-S/M-06-A

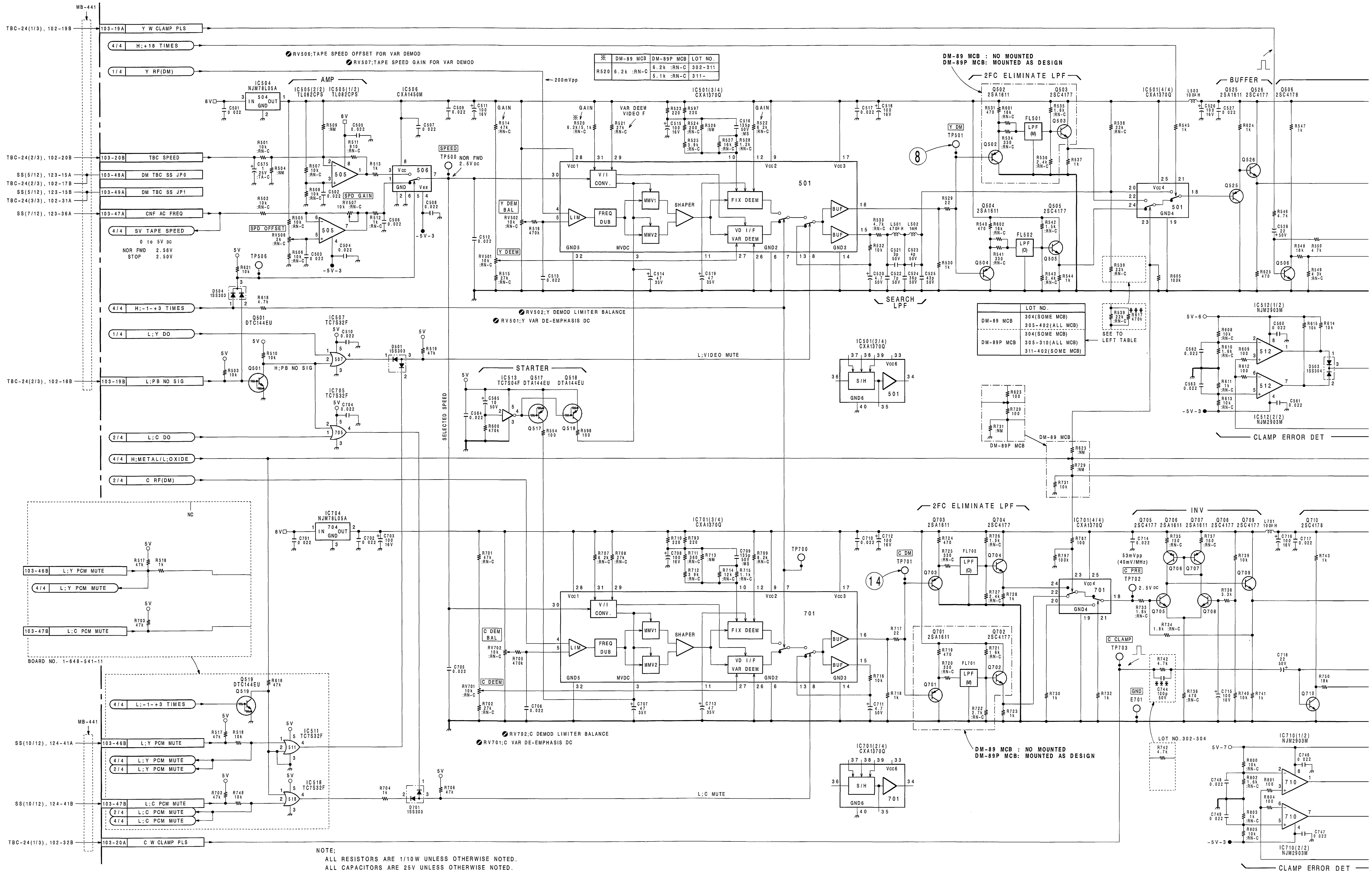

※	DM-89 MCB	DM-89P MCB	LOT NO.
R520	6.2k :RN-C	6.2k :RN-C	302-311
		5.1k :RN-C	311-

	LOT NO.
DM-89 MCB	304(SOME MCB)
	305-402(ALL MCB)
DM-89P MCB	304(SOME MCB)
	305-310(ALL MCB)
	311-402(SOME MCB)

NOTE;
ALL RESISTORS ARE 1/10W UNLESS OTHERWISE NOTED.
ALL CAPACITORS ARE 25V UNLESS OTHERWISE NOTED.

※	DM-89 MCB	DM-89P MCB	LOT NO.
R555	160 :RN-C	160 :RN-C	302-311
		51 :RN-C	311-

※	DM-89 MCB	DM-89P MCB
R557	470 :RN-C	300 :RN-C
R561	470 :RN-C	300 :RN-C

※	DM-89 MCB	DM-89P MCB
Q514	NO MOUNTED	6.8k :RN-C
R586	NO MOUNTED	DTC144EU

FM CARRIER ALLOCATION

	DM-89 MCB		DM-89P MCB	
	METAL	OXIDE	METAL	OXIDE
Y SYNC TIP	6.24MHz	4.82MHz	7.44MHz	4.82MHz
Y PEDESTAL	6.86MHz	5.44MHz	8.10MHz	5.47MHz
Y WHITE PEAK	8.43MHz	7.00MHz	9.63MHz	7.00MHz

REFERENCE SIGNAL IS 100% WHITE SIGNAL.

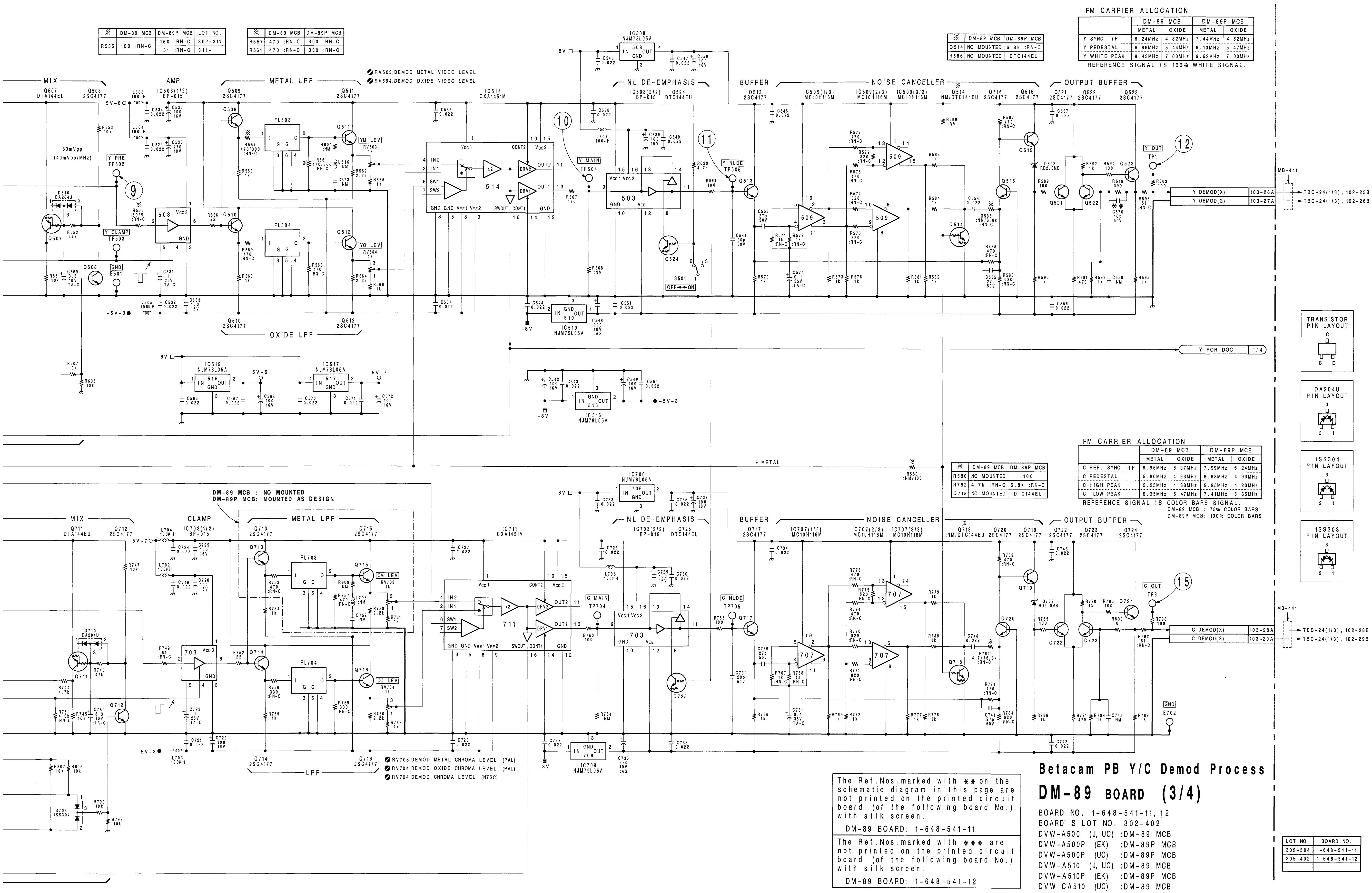

※	DM-89 MCB	DM-89P MCB
R580	NO MOUNTED	100
R782	4.7k :RN-C	6.8k :RN-C
Q718	NO MOUNTED	DTC144EU

FM CARRIER ALLOCATION

	DM-89 MCB		DM-89P MCB	
	METAL	OXIDE	METAL	OXIDE
C REF. SYNC TIP	6.95MHz	6.07MHz	7.99MHz	6.24MHz
C PEDESTAL	5.80MHz	4.93MHz	6.68MHz	4.93MHz
C HIGH PEAK	5.25MHz	4.38MHz	5.95MHz	4.20MHz
C LOW PEAK	6.35MHz	5.47MHz	7.41MHz	5.65MHz

REFERENCE SIGNAL IS COLOR BARS SIGNAL.
DM-89 MCB : 75% COLOR BARS
DM-89P MCB: 100% COLOR BARS

The Ref.Nos.marked with ** on the schematic diagram in this page are not printed on the printed circuit board (of the following board No.) with silk screen.

DM-89 BOARD: 1-648-541-11

The Ref.Nos.marked with *** are not printed on the printed circuit board (of the following board No.) with silk screen.

DM-89 BOARD: 1-648-541-12

Betacam PB Y/C Demod Process

DM-89 BOARD (3/4)

BOARD NO. 1-648-541-11, 12
BOARD' S LOT NO. 302-402
DVW-A500 (J, UC) :DM-89 MCB
DVW-A500P (EK) :DM-89P MCB
DVW-A500P (UC) :DM-89P MCB
DVW-A510 (J, UC) :DM-89 MCB
DVW-A510P (EK) :DM-89P MCB
DVW-CA510 (UC) :DM-89 MCB
DVW-CA510P(EK) :DM-89P MCB

DVW-DM89-ALL-A-PB-S/M-06-A

LOT NO.	BOARD NO.
302-304	1-648-541-11
305-402	1-648-541-12

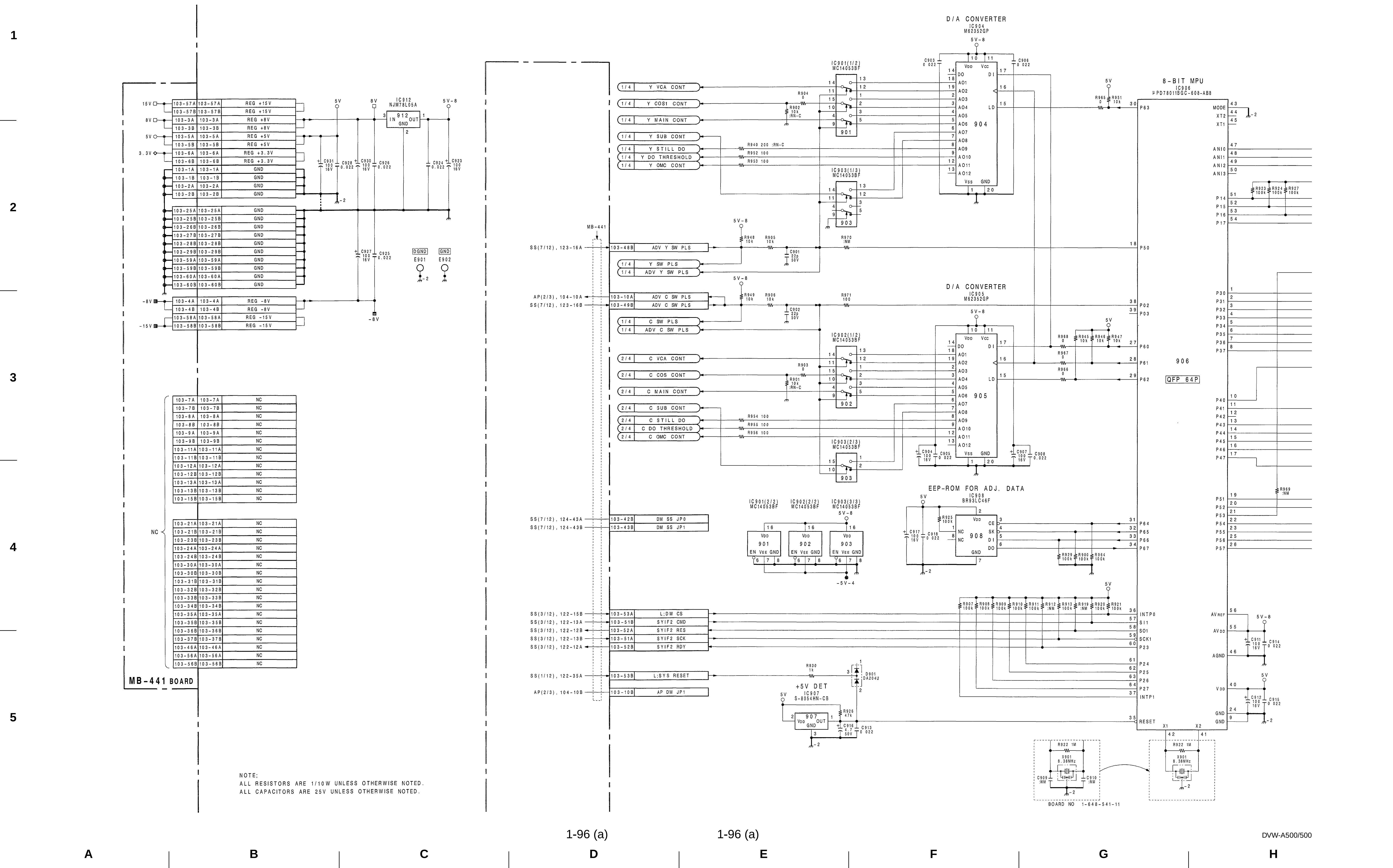
D/A CONVERTER
IC904
M62352GP
8-BIT MPU
IC906
D/A CONVERTER
IC905
M62352GP
EEP-ROM FOR ADJ. DATA
IC908
BR93LC46F
+5V DET
IC907
S-8054HN-CB
IC912
NJM78L05A
MB-441 BOARD
NOTE;
ALL RESISTORS ARE 1/10W UNLESS OTHERWISE NOTED.
ALL CAPACITORS ARE 25V UNLESS OTHERWISE NOTED.
BOARD NO 1-648-541-11

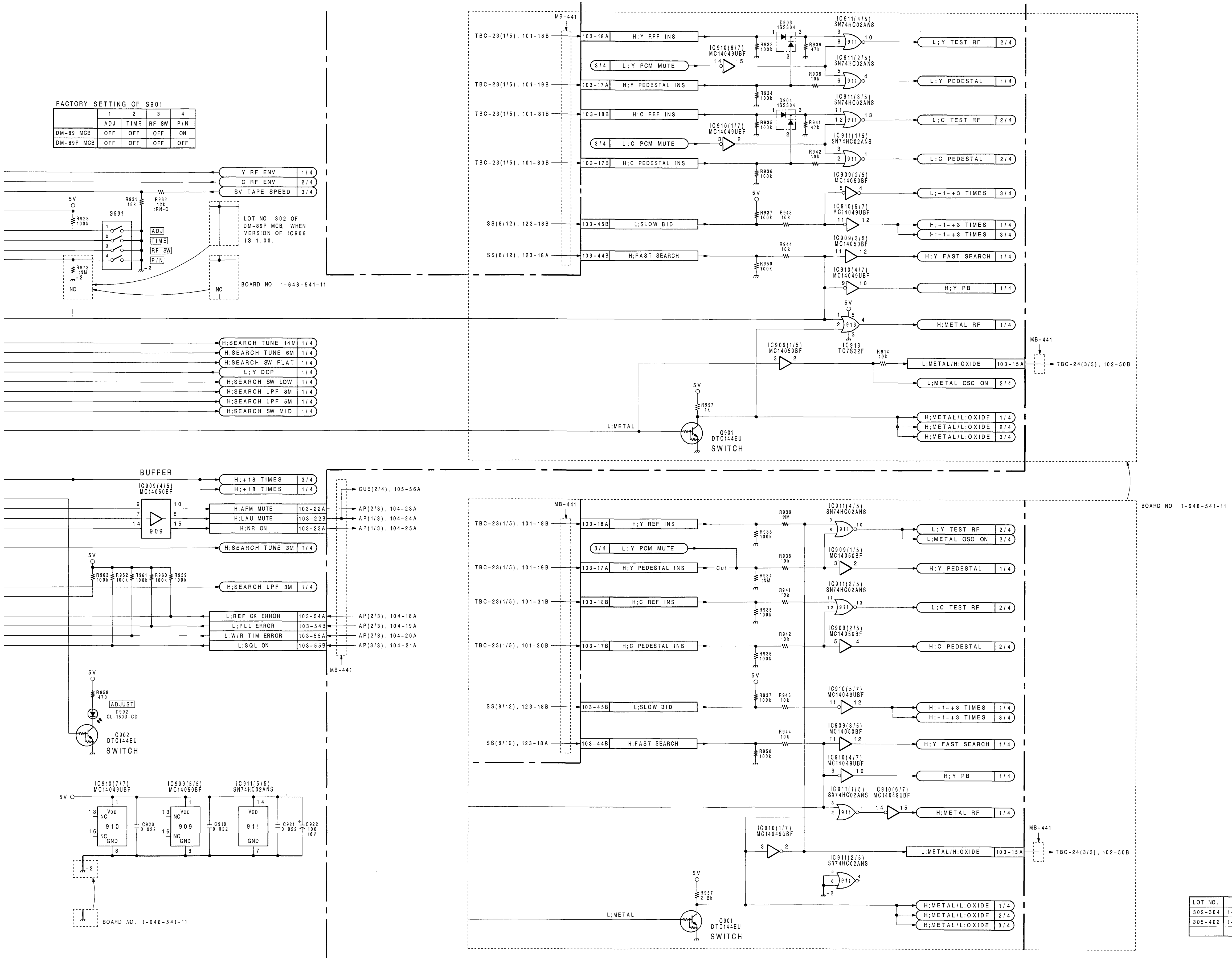

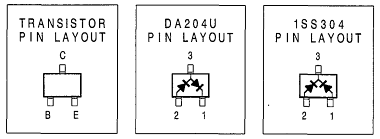

LOT NO.	BOARD NO.
302-304	1-648-541-11
305-402	1-648-541-12

Betacam PB Control
DM-89 BOARD (4/4)

BOARD NO. 1-648-541-11, 12
BOARD' S LOT NO. 302-402
DVW-A500 (J, UC) :DM-89 MCB
DVW-A500P (EK) :DM-89P MCB
DVW-A500P (UC) :DM-89P MCB
DVW-A510 (J, UC) :DM-89 MCB
DVW-A510P (EK) :DM-89P MCB
DVW-CA510 (UC) :DM-89 MCB
DVW-CA510P(EK) :DM-89P MCB

DVW-DM89-ALL-A-PB-S/M-06-A

I J K L M N O P

 TBC-24

TBC-24 Board -A Side-

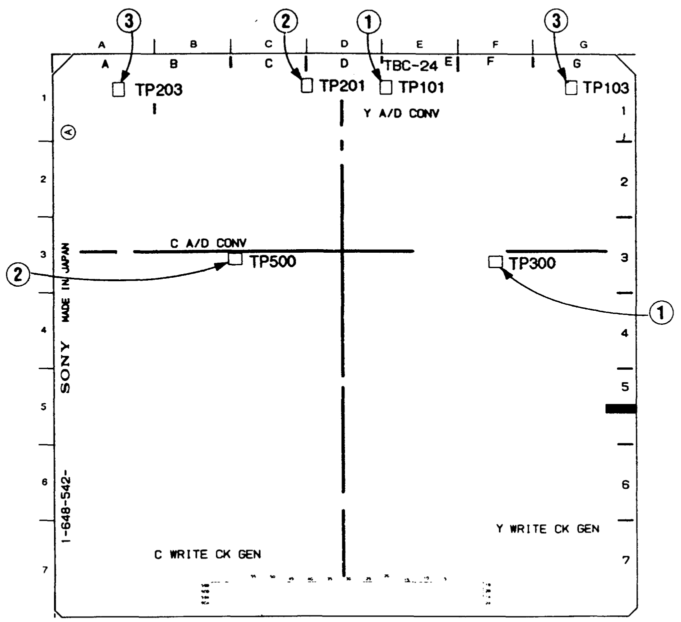

①TP101(E-1) PB mode
TP300(F-3) PB mode

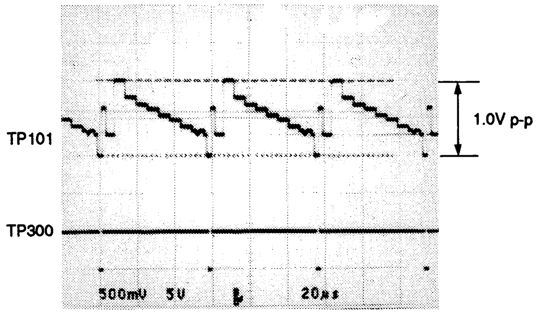

②TP201(C-1) PB mode
TP500(C-3) PB mode

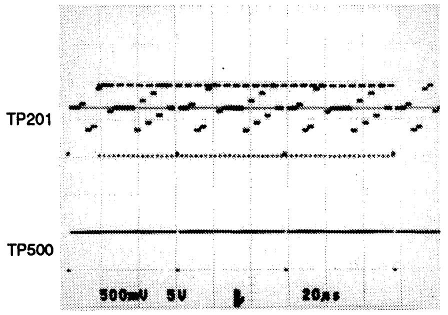

③TP103(G-1) PB mode
TP203(A-1) PB mode

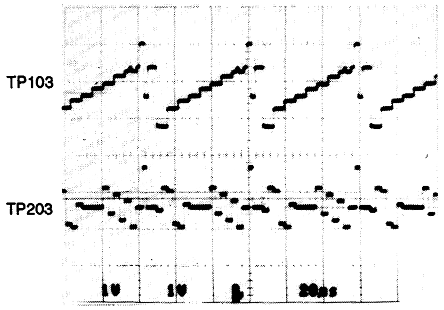

Measurement Condition
MODE : PB mode
TAPE : CR5-1B

For DVW-A500/A510/CA510

①TP101(E-1) PB mode
TP300(F-3) PB mode

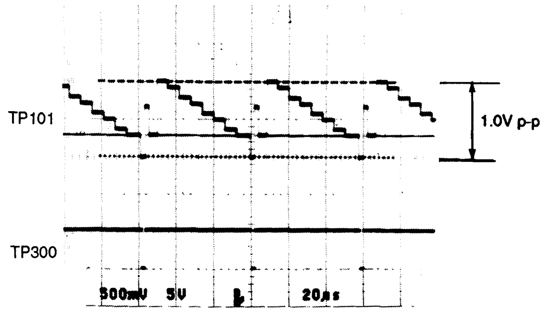

②TP201(C-1) PB mode
TP500(C-3) PB mode

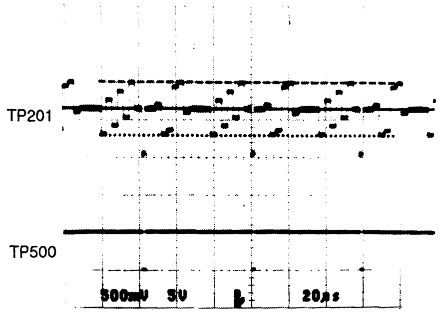

③TP103(G-1) PB mode
TP203(A-1) PB mode

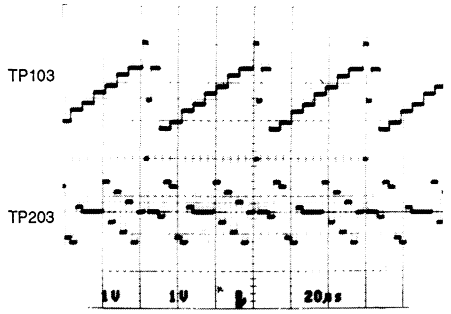

Measurement Condition
MODE : PB mode
TAPE : CR5-1BPS

For DVW-A500P/A510P/CA510P

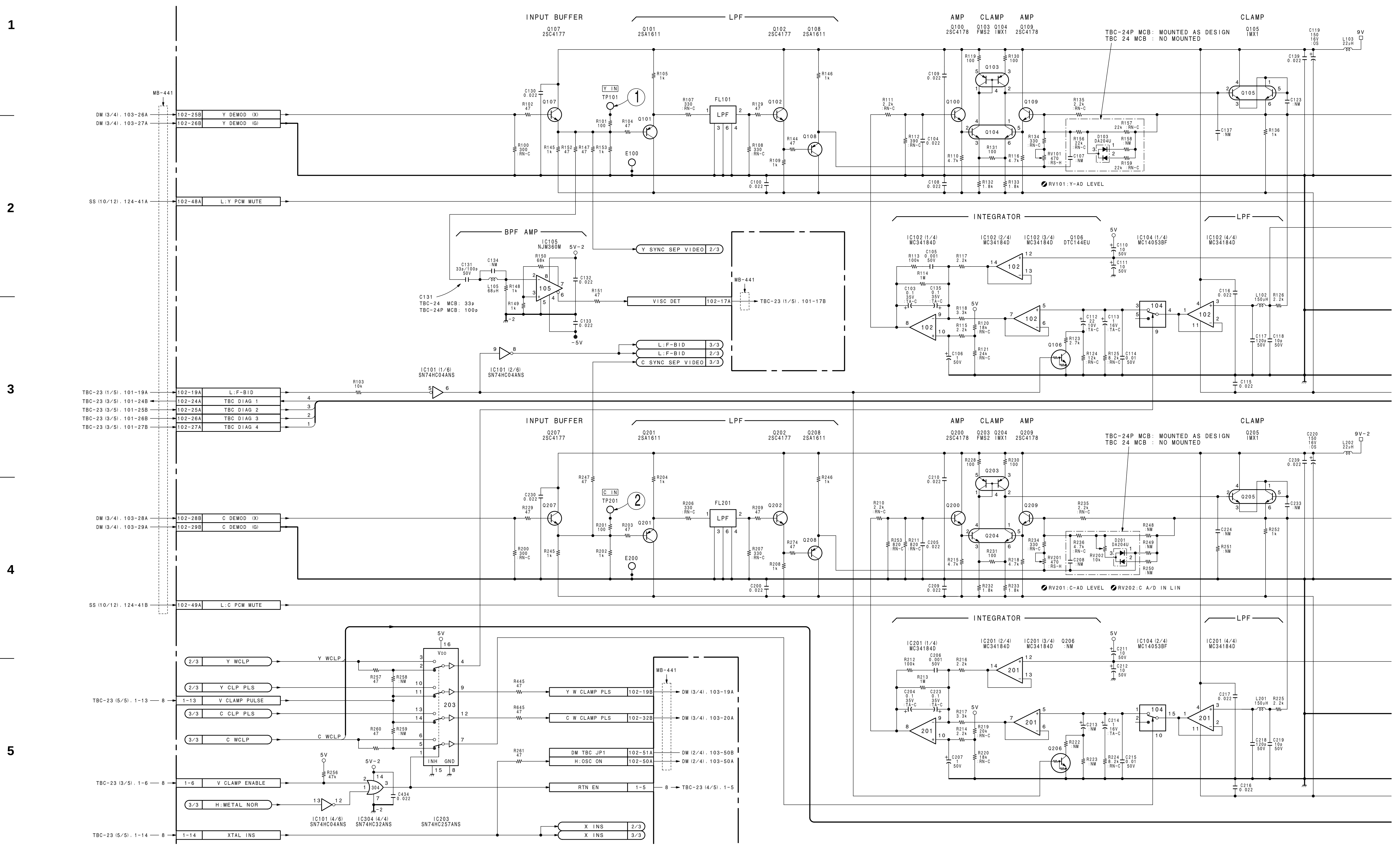
INPUT BUFFER
LPF
AMP
CLAMP
TBC-24P MCB: MOUNTED AS DESIGN
TBC 24 MCB : NO MOUNTED
Y DEMOD (X)
Y DEMOD (G)
L:Y PCM MUTE
BPF AMP
INTEGRATOR
Y SYNC SEP VIDEO
VISC DET
L:F-BID
C SYNC SEP VIDEO
TBC DIAG 1
TBC DIAG 2
TBC DIAG 3
TBC DIAG 4
C DEMOD (X)
C DEMOD (G)
L:C PCM MUTE
Y WCLP
Y CLP PLS
V CLAMP PULSE
C CLP PLS
C WCLP
V CLAMP ENABLE
H:METAL NOR
XTAL INS
Y W CLAMP PLS
C W CLAMP PLS
DM TBC JP1
H:OSC ON
RTN EN
X INS
RV101:Y-AD LEVEL
RV201:C-AD LEVEL
RV202:C A/D IN LIN
MB-441

A B C D E F G H

 TBC-24 (1/3)

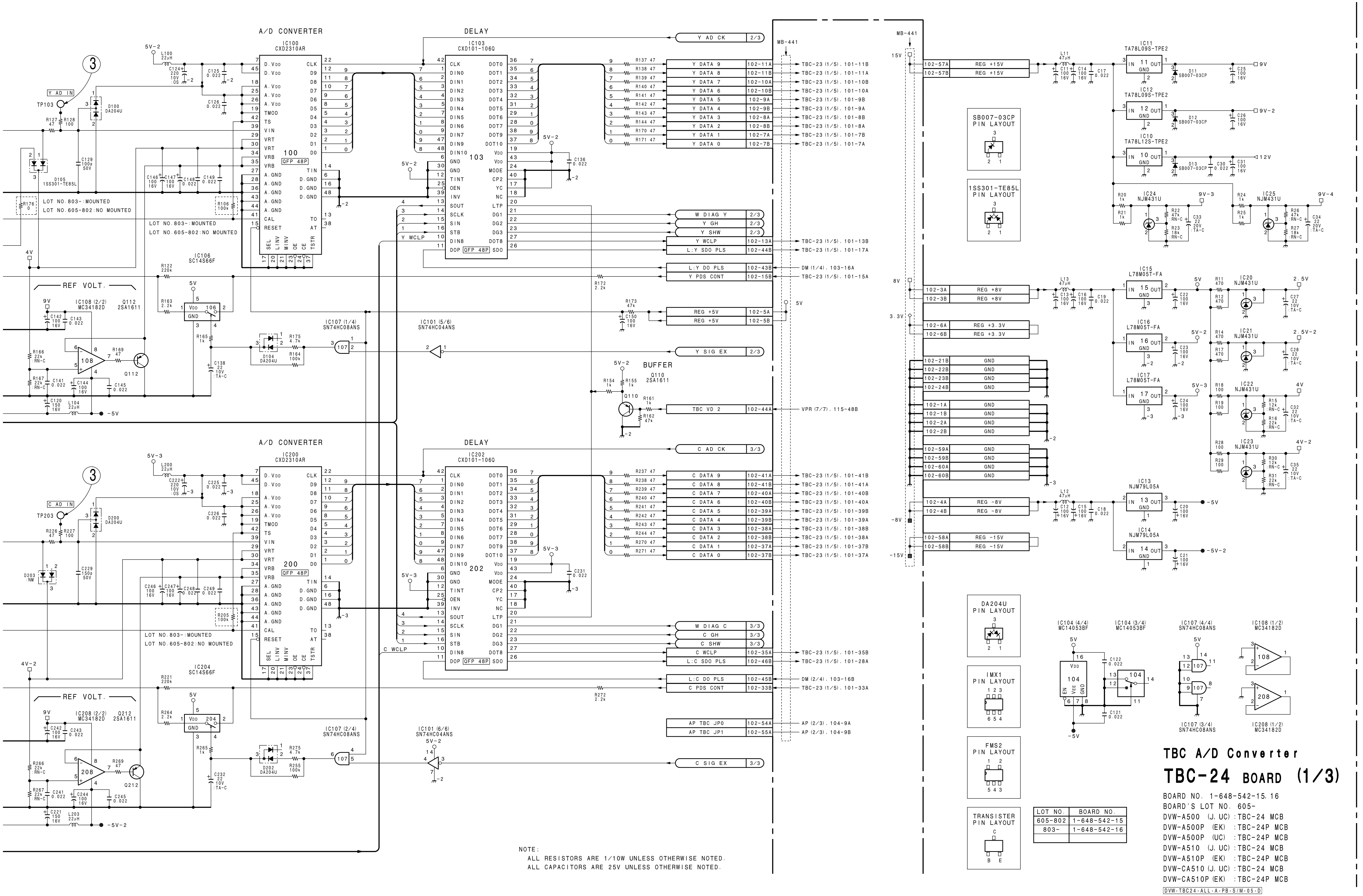

 1-101 (d)

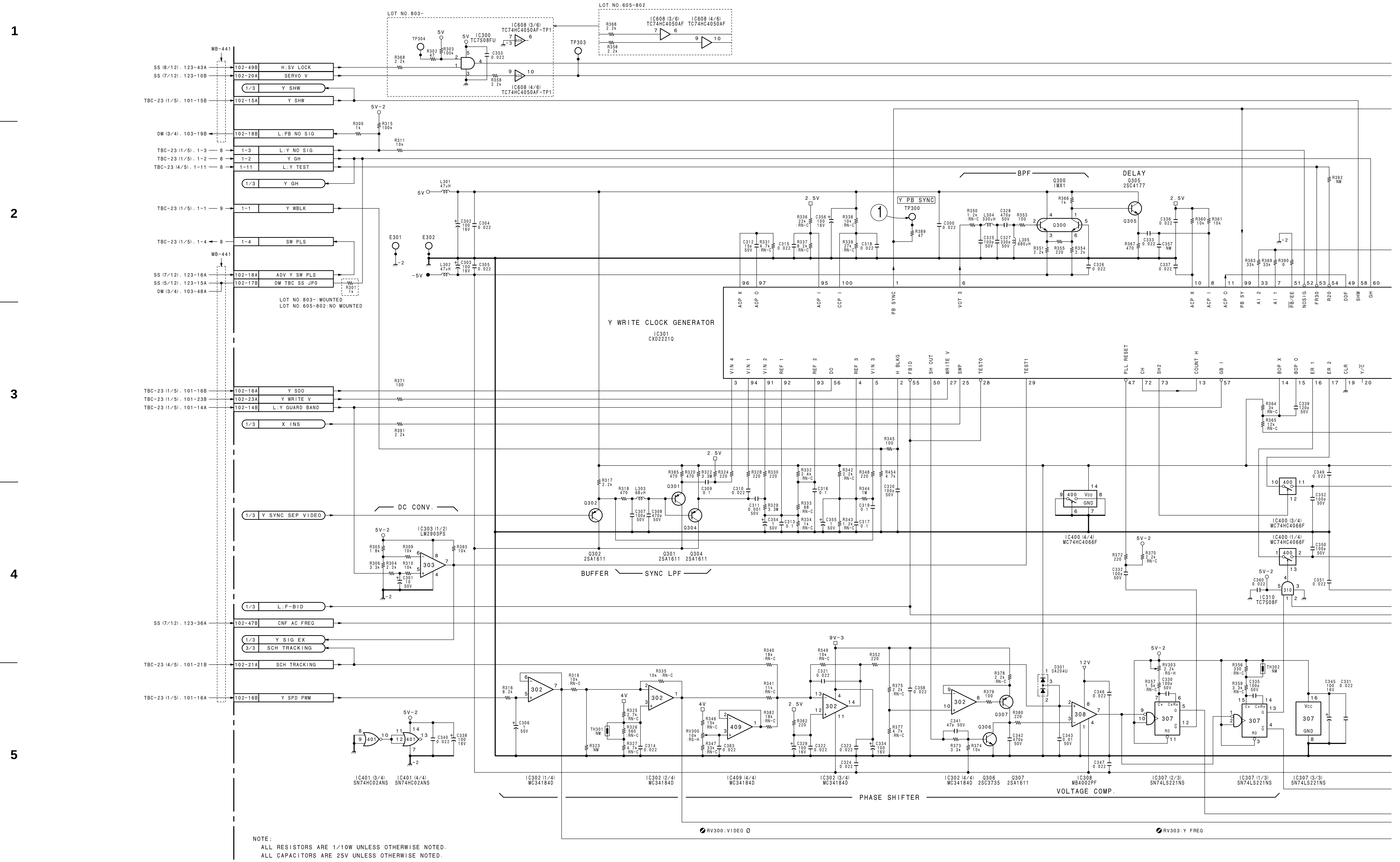

DVW-A500/500

A B C D E F G H

http://getMANUAL.com

TBC-24 (2/3)

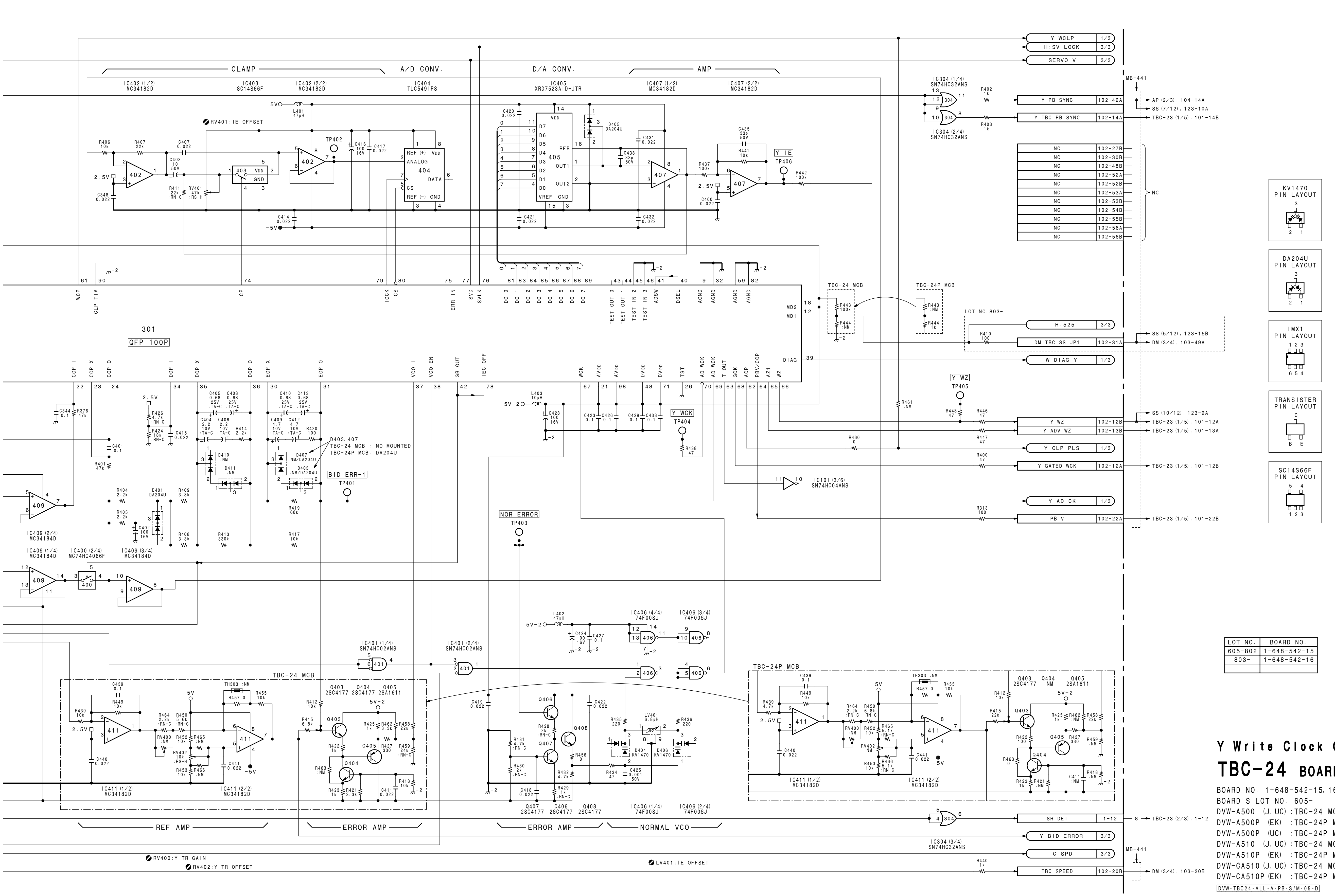

LOT NO.	BOARD NO.
605-802	1-648-542-15
803-	1-648-542-16

Y Write Clock Generator
TBC-24 BOARD (2/3)

BOARD NO. 1-648-542-15, 16
BOARD'S LOT NO. 605-
DVW-A500 (J, UC) :TBC-24 MCB
DVW-A500P (EK) :TBC-24P MCB
DVW-A500P (UC) :TBC-24P MCB
DVW-A510 (J, UC) :TBC-24 MCB
DVW-A510P (EK) :TBC-24P MCB
DVW-CA510 (J, UC) :TBC-24 MCB
DVW-CA510P (EK) :TBC-24P MCB

DVW-TBC24-ALL-A-PB-S/M-05-D

 TBC-24 (3/3)

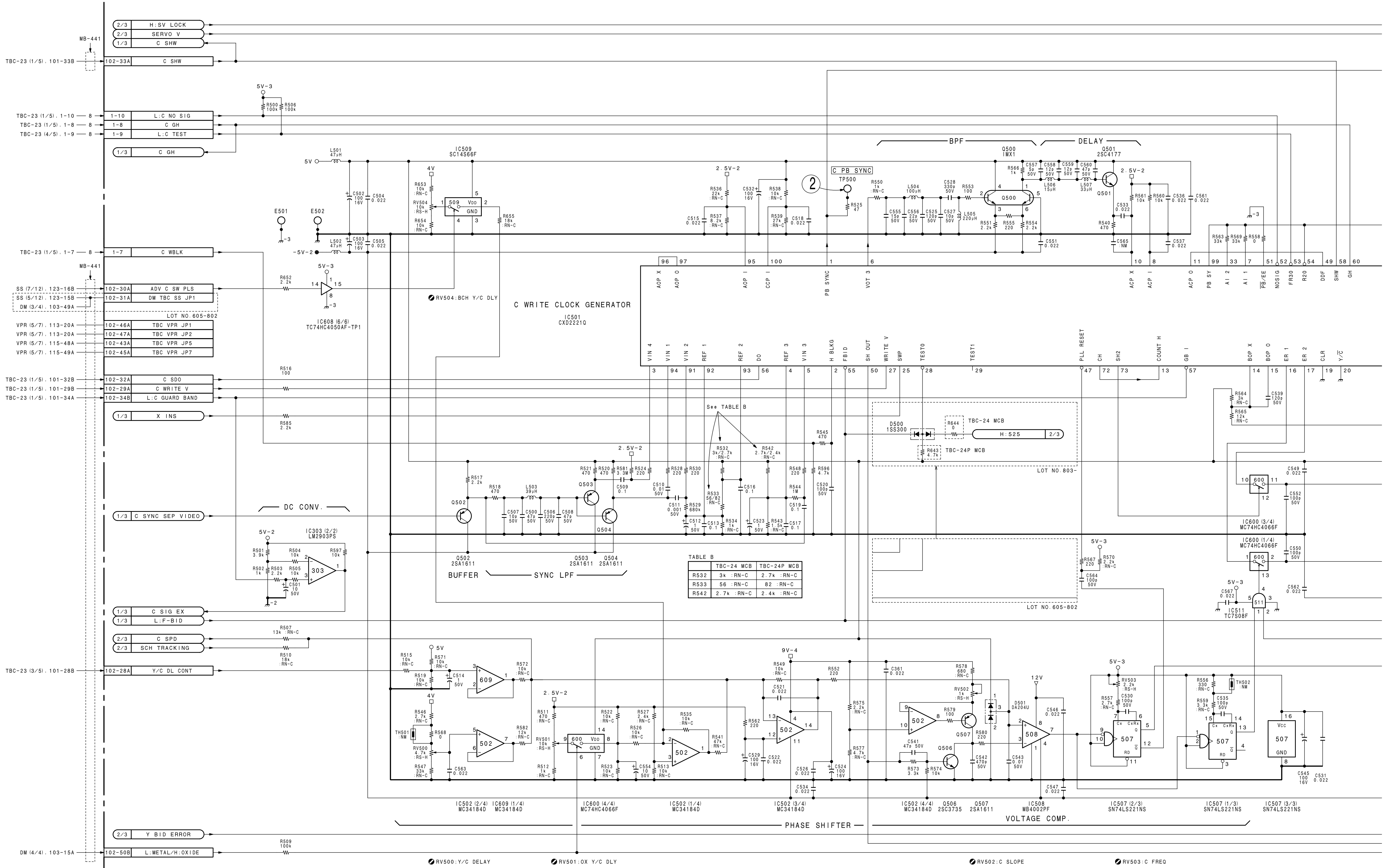

TABLE B

	TBC-24 MCB	TBC-24P MCB
R532	3k :RN-C	2.7k :RN-C
R533	56 :RN-C	82 :RN-C
R542	2.7k :RN-C	2.4k :RN-C

NOTE:
ALL RESISTORS ARE 1/10W UNLESS OTHERWISE NOTED.
ALL CAPACITORS ARE 25V UNLESS OTHERWISE NOTED.

 1-104 (d)

A B C D E F G H

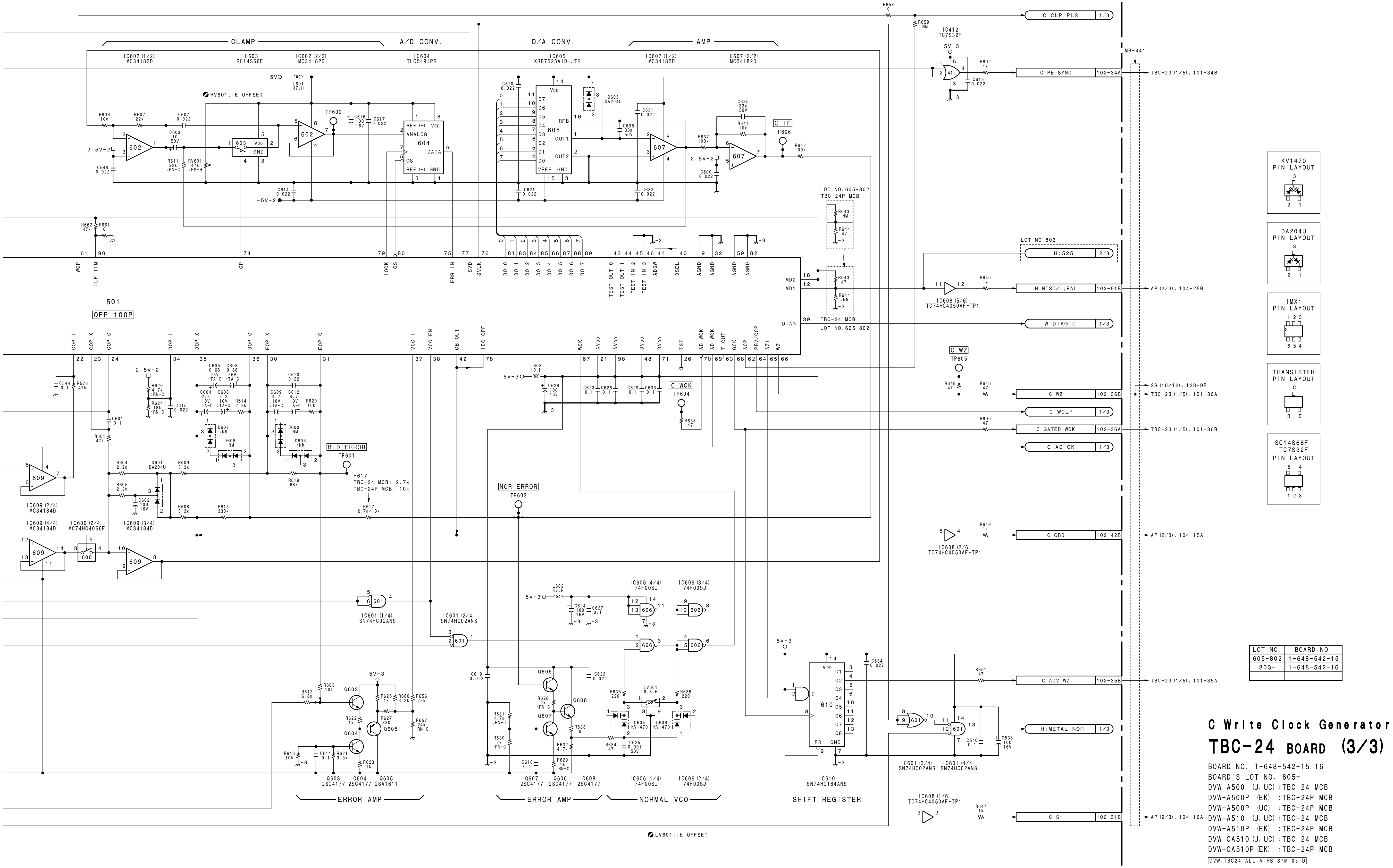

LOT NO.	BOARD NO.
605-802	1-648-542-15
803-	1-648-542-16

C Write Clock Generator
TBC-24 BOARD (3/3)

BOARD NO. 1-648-542-15,16
BOARD'S LOT NO. 605-
DVW-A500 (J,UC) :TBC-24 MCB
DVW-A500P (EK) :TBC-24P MCB
DVW-A500P (UC) :TBC-24P MCB
DVW-A510 (J,UC) :TBC-24 MCB
DVW-A510P (EK) :TBC-24P MCB
DVW-CA510 (J,UC) :TBC-24 MCB
DVW-CA510P (EK) :TBC-24P MCB

DVW-TBC24-ALL-A-PB-S/M-05-D

 TBC-24 (1/3)

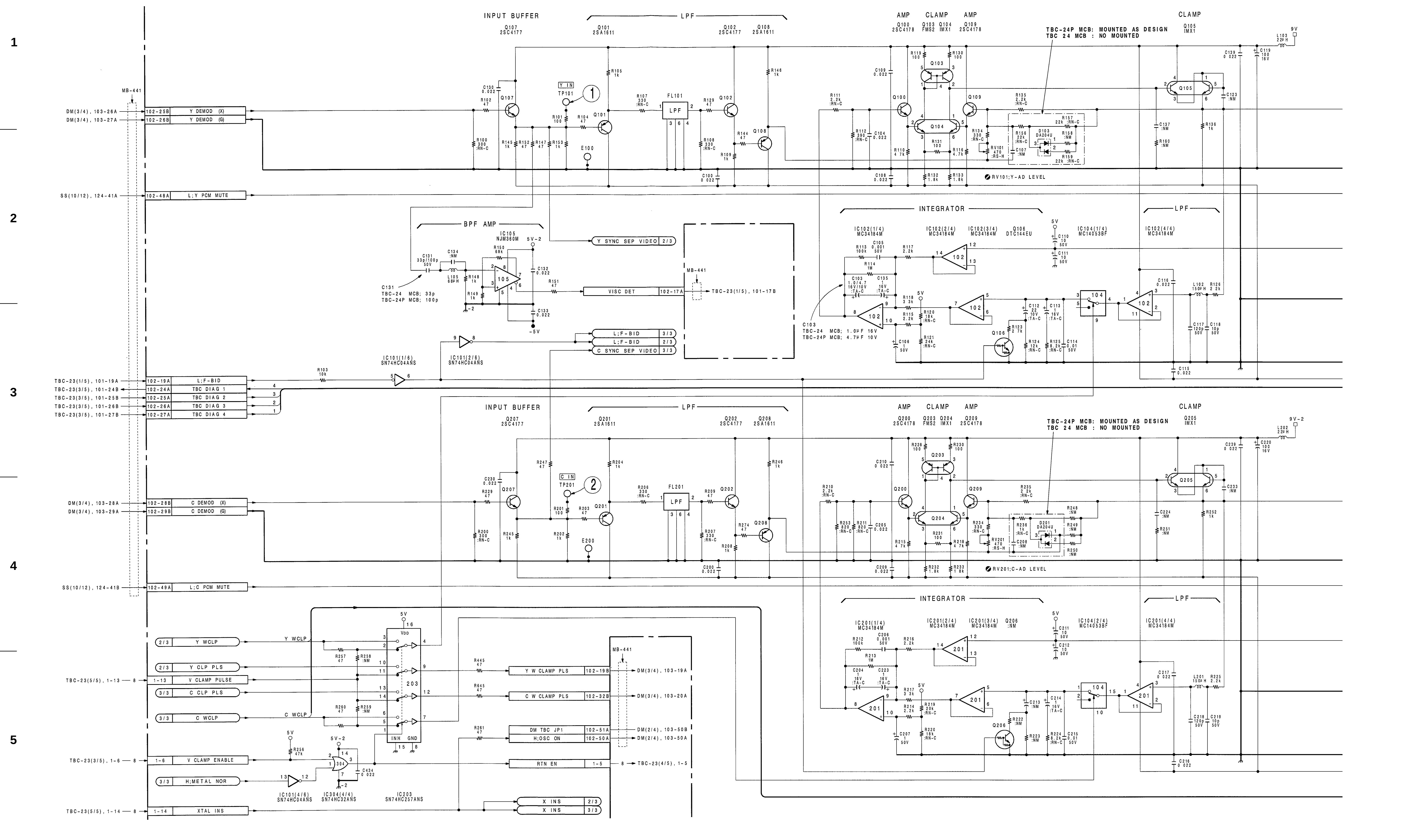

 1-100 (c)

TBC-24 (1/3)

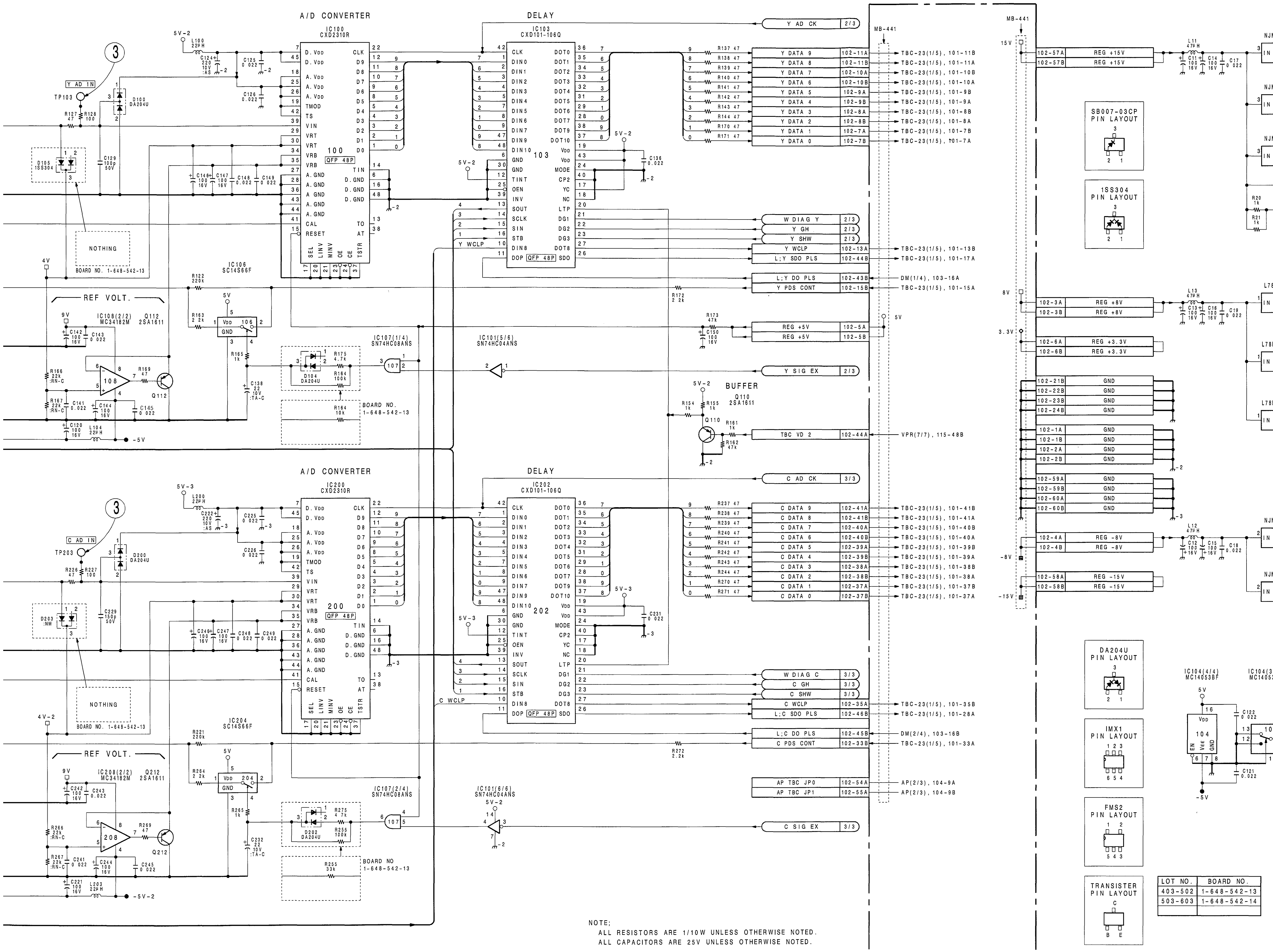

LOT NO.	BOARD NO.
403-502	1-648-542-13
503-603	1-648-542-14

TBC A/D Converter
TBC-24 BOARD (1/3)

BOARD NO. 1-648-542-13, 14
BOARD'S LOT NO. 403-603
DVW-A500 (J, UC) :TBC-24 MCB
DVW-A500P (EK) :TBC-24P MCB
DVW-A500P (UC) :TBC-24P MCB
DVW-A510 (J, UC) :TBC-24 MCB
DVW-A510P (EK) :TBC-24P MCB
DVW-CA510(J, UC) :TBC-24 MCB
DVW-CA510P(EK) :TBC-24P MCB

DVW-TBC24-ALL-A-PB-S/M-05-C

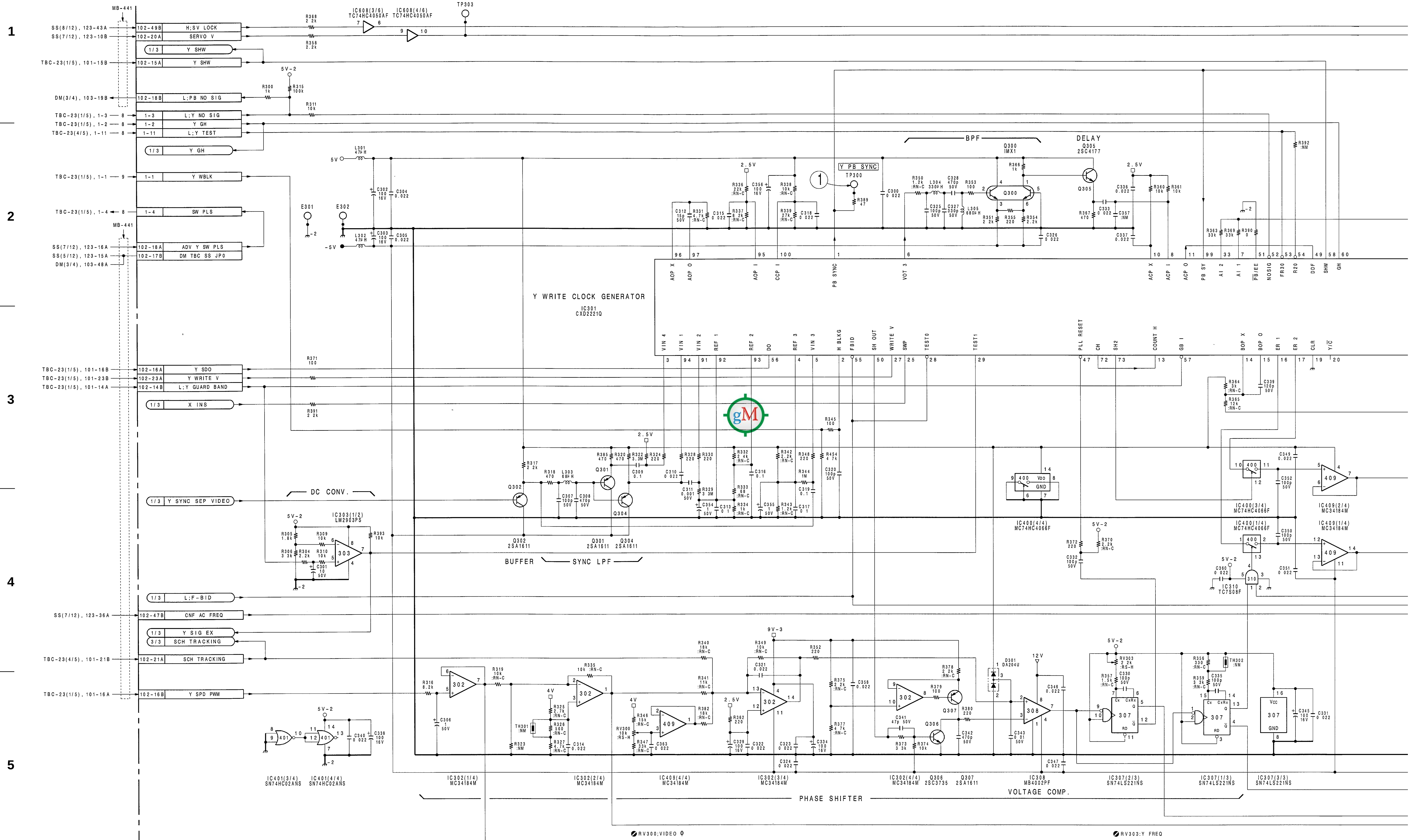

NOTE;
ALL RESISTORS ARE 1/10W UNLESS OTHERWISE NOTED.
ALL CAPACITORS ARE 25V UNLESS OTHERWISE NOTED.

A B C D E F G H

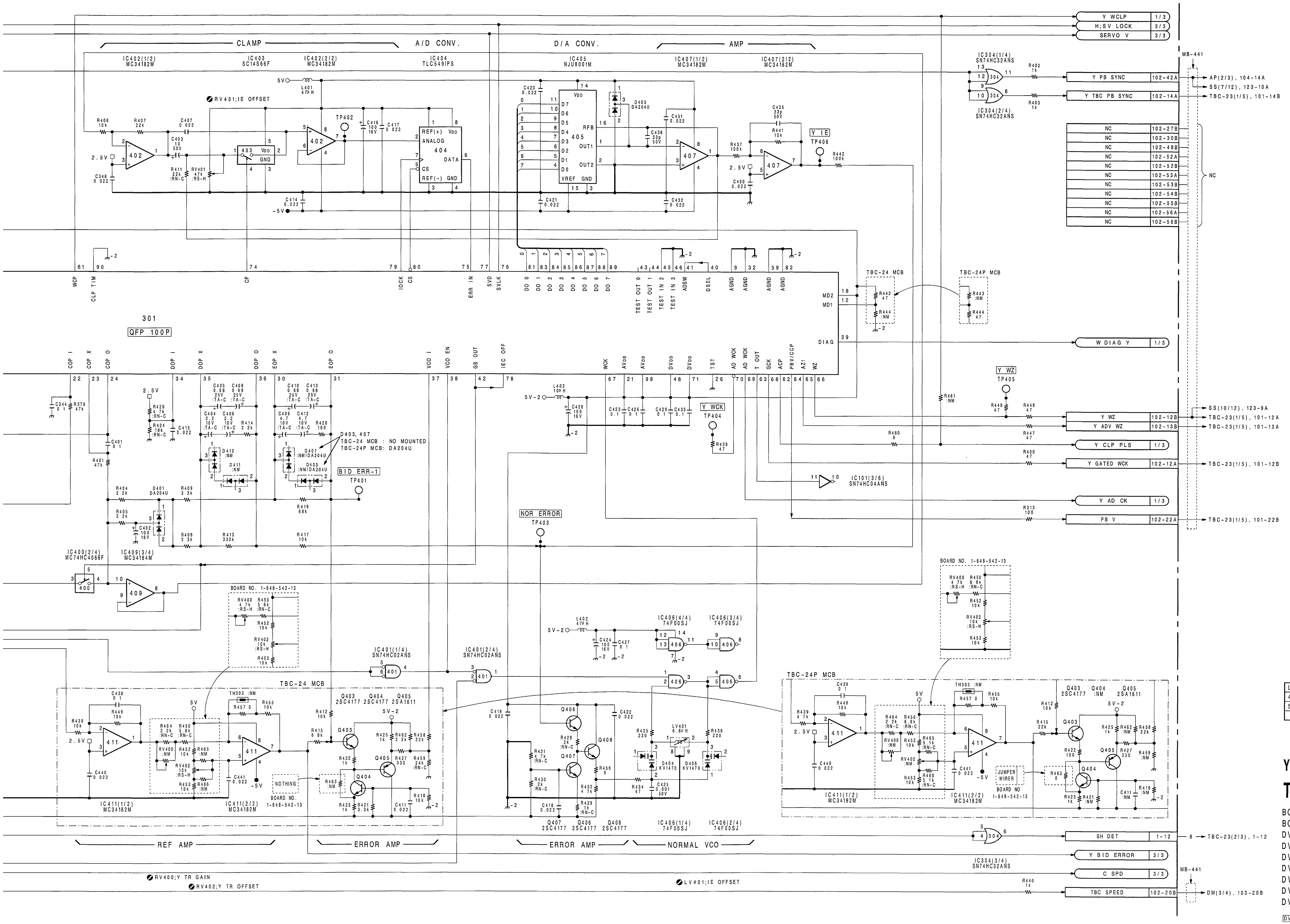

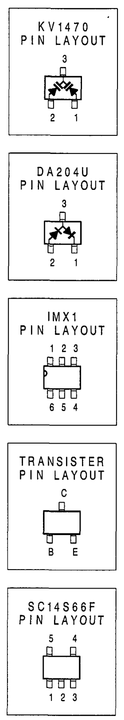

LOT NO.	BOARD NO.
403-502	1-648-542-13
503-603	1-648-542-14

Y Write Clock Generator

TBC-24 BOARD (2/3)

BOARD NO. 1-648-542-13, 14
BOARD' S LOT NO. 403-603
DVW-A500 (J, UC) :TBC-24 MCB
DVW-A500P (EK) :TBC-24P MCB
DVW-A500P (UC) :TBC-24P MCB
DVW-A510 (J, UC) :TBC-24 MCB
DVW-A510P (EK) :TBC-24P MCB
DVW-CA510(J, UC) :TBC-24 MCB
DVW-CA510P(EK) :TBC-24P MCB

DVW-TBC24-ALL-A-PB-S/M-05-C

 TBC-24 (3/3)

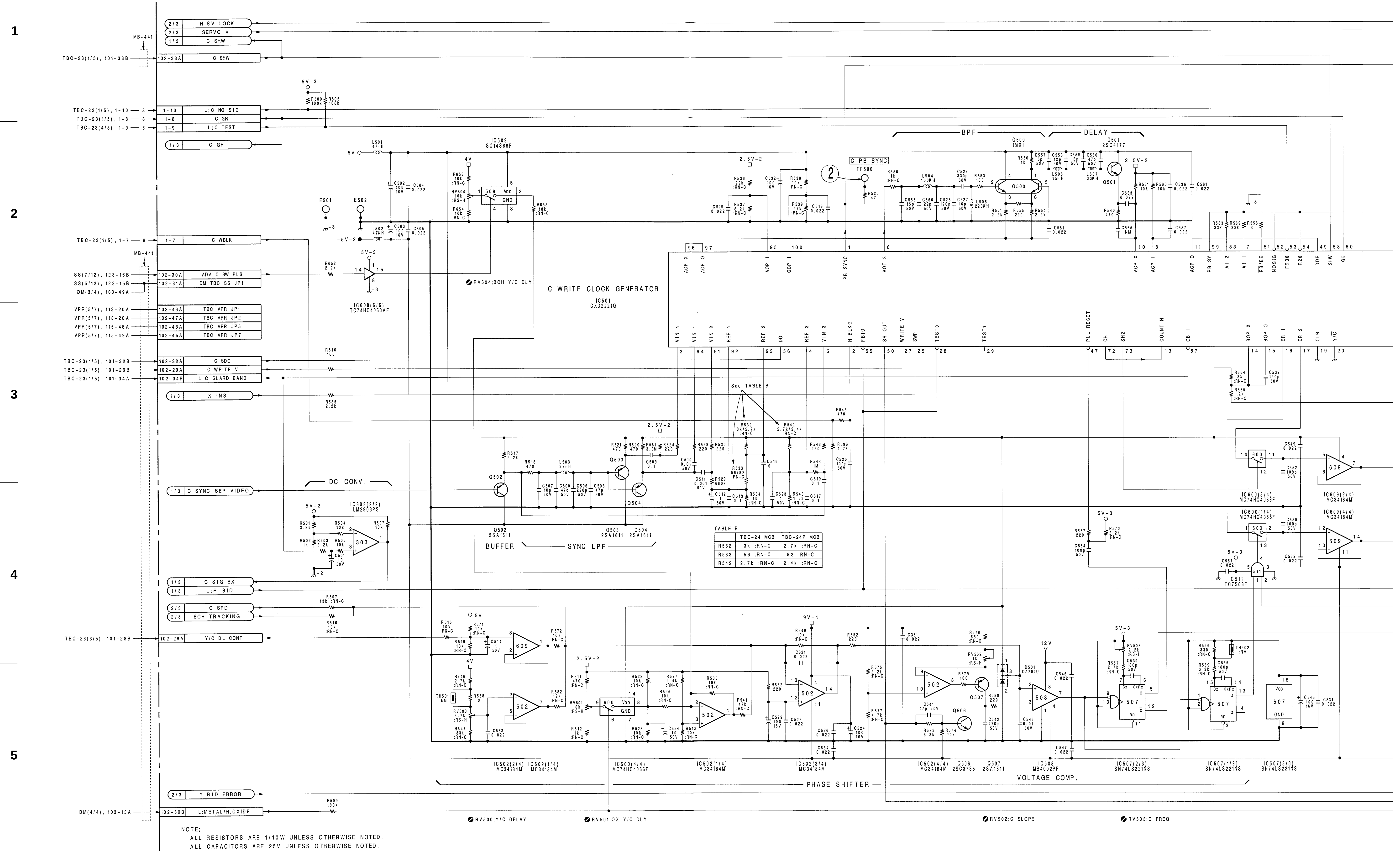

TABLE B

	TBC-24 MCB	TBC-24P MCB
R532	3k :RN-C	2.7k :RN-C
R533	56 :RN-C	82 :RN-C
R542	2.7k :RN-C	2.4k :RN-C

NOTE;
ALL RESISTORS ARE 1/10W UNLESS OTHERWISE NOTED.
ALL CAPACITORS ARE 25V UNLESS OTHERWISE NOTED.

A | B | C | D | E | F | G | H

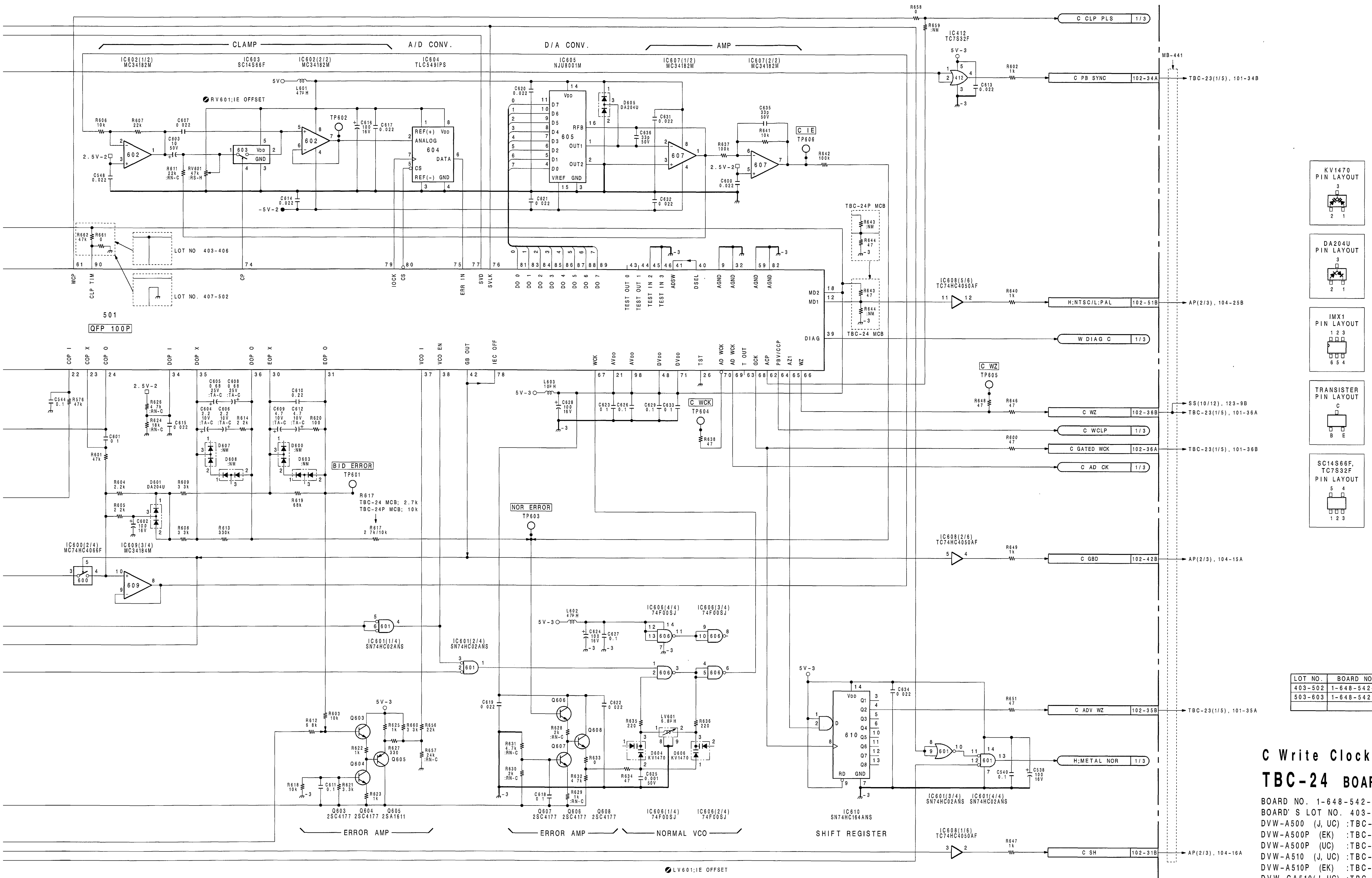

LOT NO.	BOARD NO.
403-502	1-648-542-13
503-603	1-648-542-14

C Write Clock Generator

TBC-24 BOARD (3/3)

BOARD NO. 1-648-542-13, 14
BOARD' S LOT NO. 403-603
DVW-A500 (J, UC) :TBC-24 MCB
DVW-A500P (EK) :TBC-24P MCB
DVW-A500P (UC) :TBC-24P MCB
DVW-A510 (J, UC) :TBC-24 MCB
DVW-A510P (EK) :TBC-24P MCB
DVW-CA510(J, UC) :TBC-24 MCB
DVW-CA510P(EK) :TBC-24P MCB

DVW-TBC24-ALL-A-PB-S/M-05-C

TBC-24 (1/3)

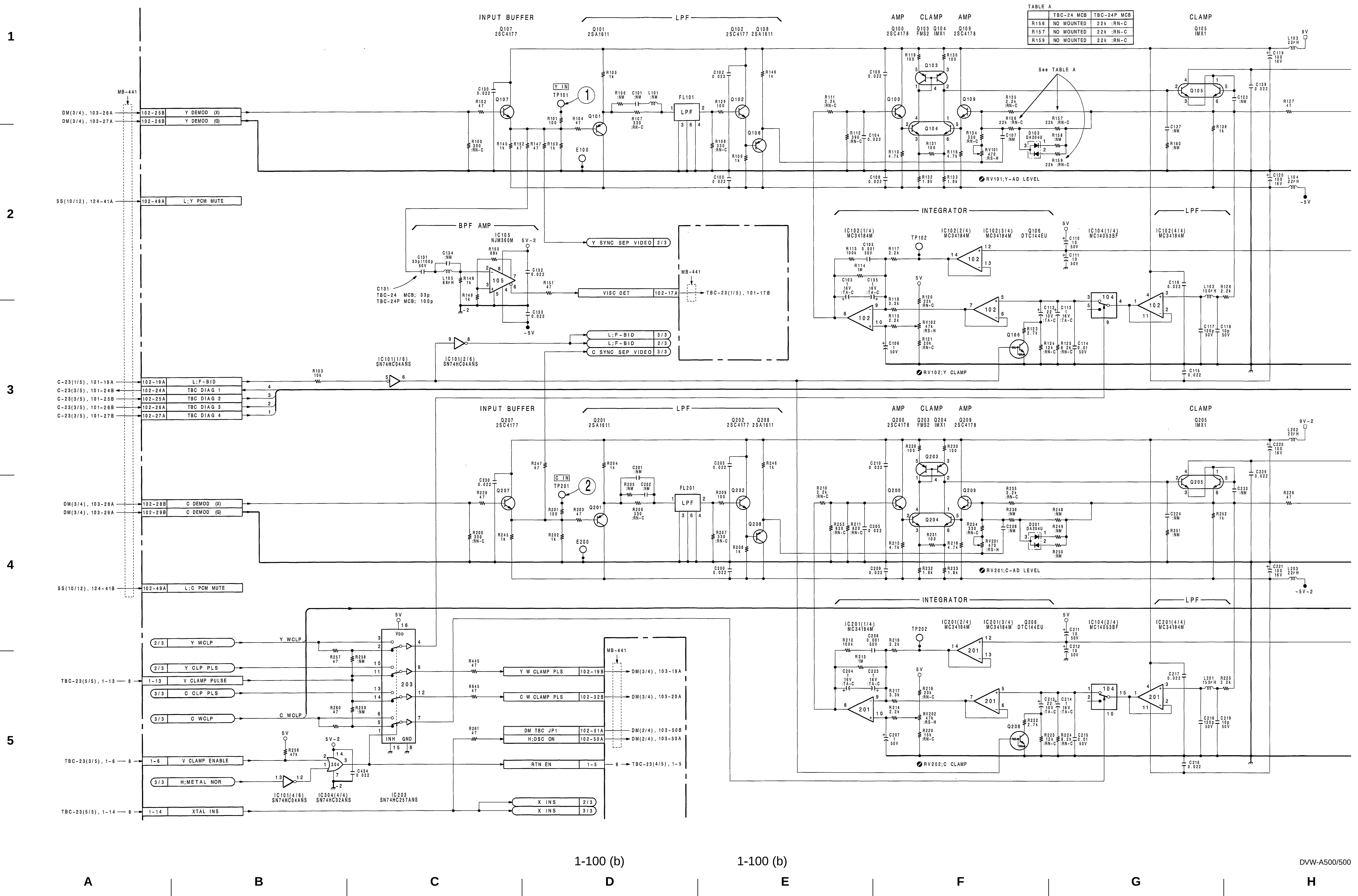

1-100 (b)

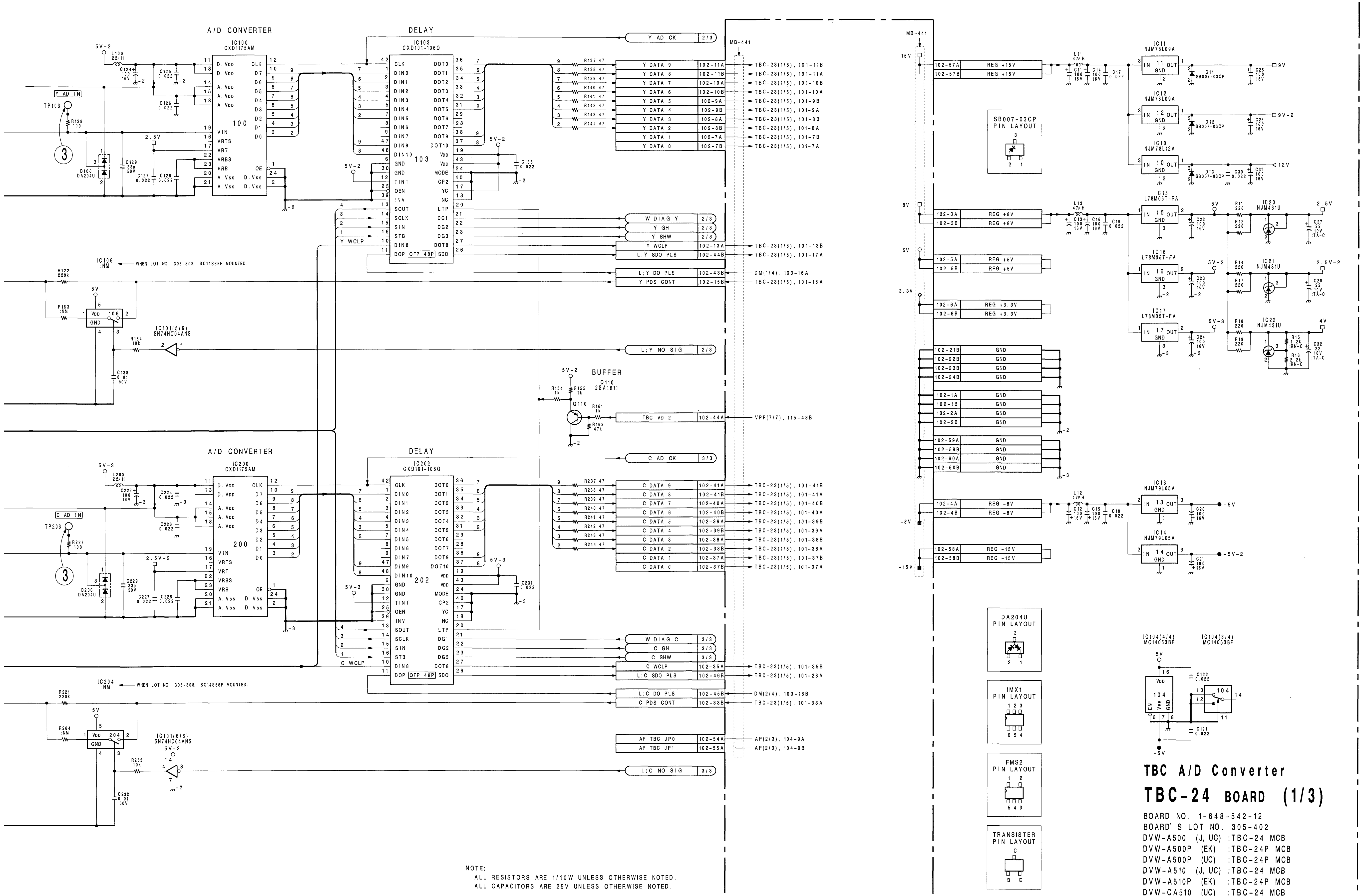

NOTE;
ALL RESISTORS ARE 1/10W UNLESS OTHERWISE NOTED.
ALL CAPACITORS ARE 25V UNLESS OTHERWISE NOTED.

TBC A/D Converter

TBC-24 BOARD (1/3)

BOARD NO. 1-648-542-12
BOARD' S LOT NO. 305-402
DVW-A500 (J, UC) :TBC-24 MCB
DVW-A500P (EK) :TBC-24P MCB
DVW-A500P (UC) :TBC-24P MCB
DVW-A510 (J, UC) :TBC-24 MCB
DVW-A510P (EK) :TBC-24P MCB
DVW-CA510 (UC) :TBC-24 MCB
DVW-CA510P(EK) :TBC-24P MCB

DVW-TBC24-ALL-A-PB-S/M-05-B

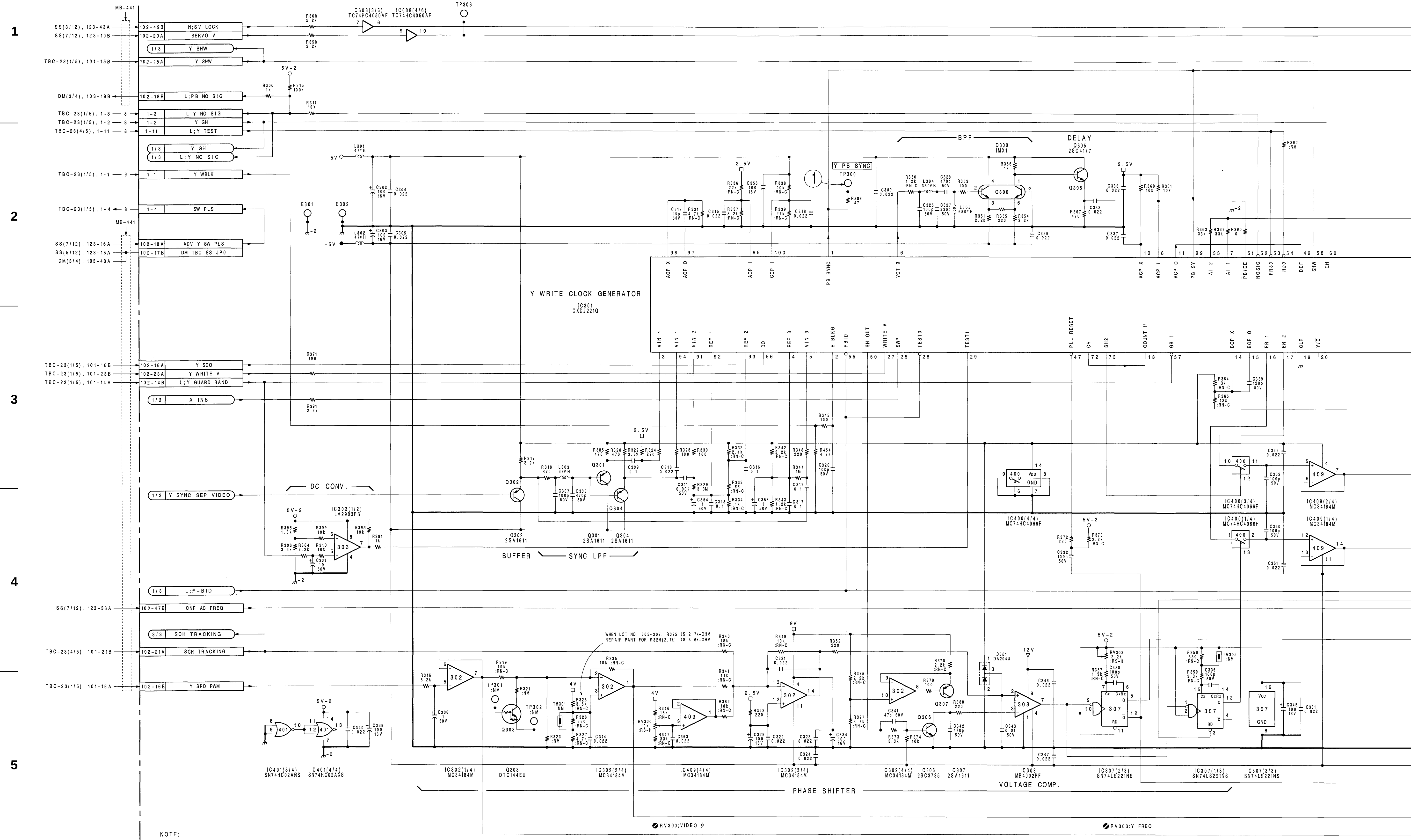

NOTE;
ALL RESISTORS ARE 1/10W UNLESS OTHERWISE NOTED.
ALL CAPACITORS ARE 25V UNLESS OTHERWISE NOTED.

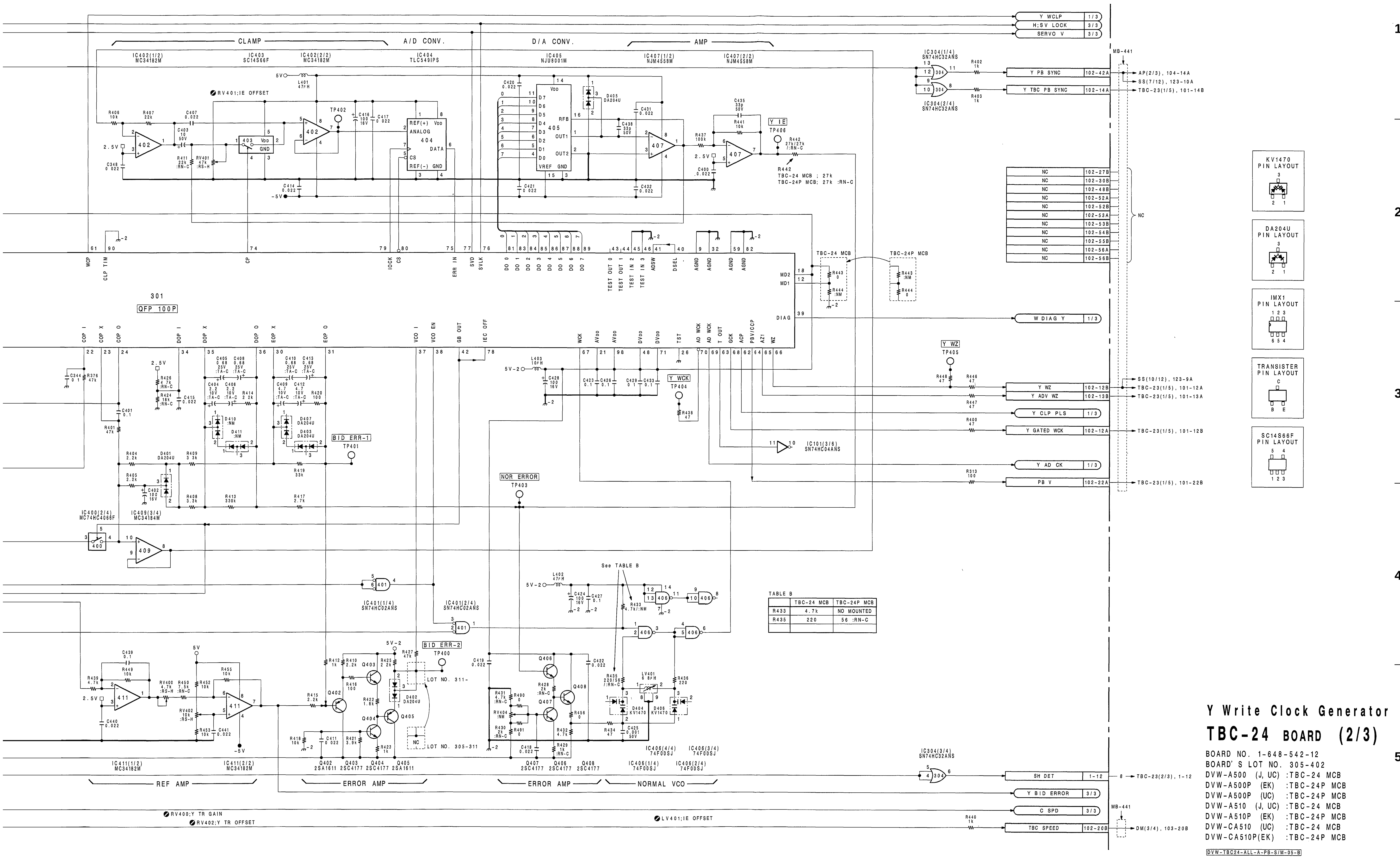

	TBC-24 MCB	TBC-24P MCB
R433	4.7k	NO MOUNTED
R435	220	56 :RN-C

 TBC-24 (3/3)

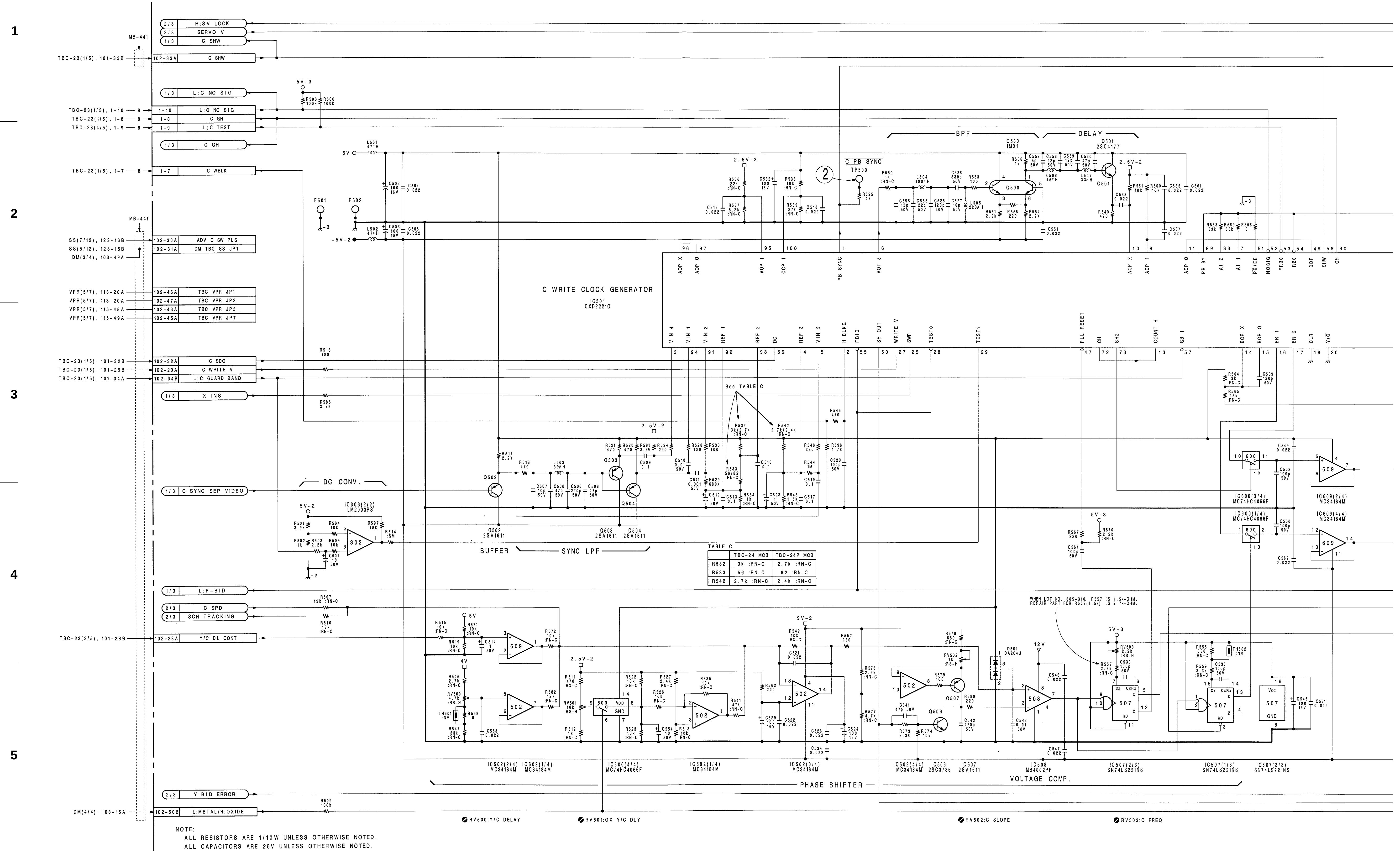

TABLE C

	TBC-24 MCB	TBC-24P MCB
R532	3k :RN-C	2.7k :RN-C
R533	56 :RN-C	82 :RN-C
R542	2.7k :RN-C	2.4k :RN-C

NOTE;
ALL RESISTORS ARE 1/10W UNLESS OTHERWISE NOTED.
ALL CAPACITORS ARE 25V UNLESS OTHERWISE NOTED.

 1-104 (b)

A B C D E F G H

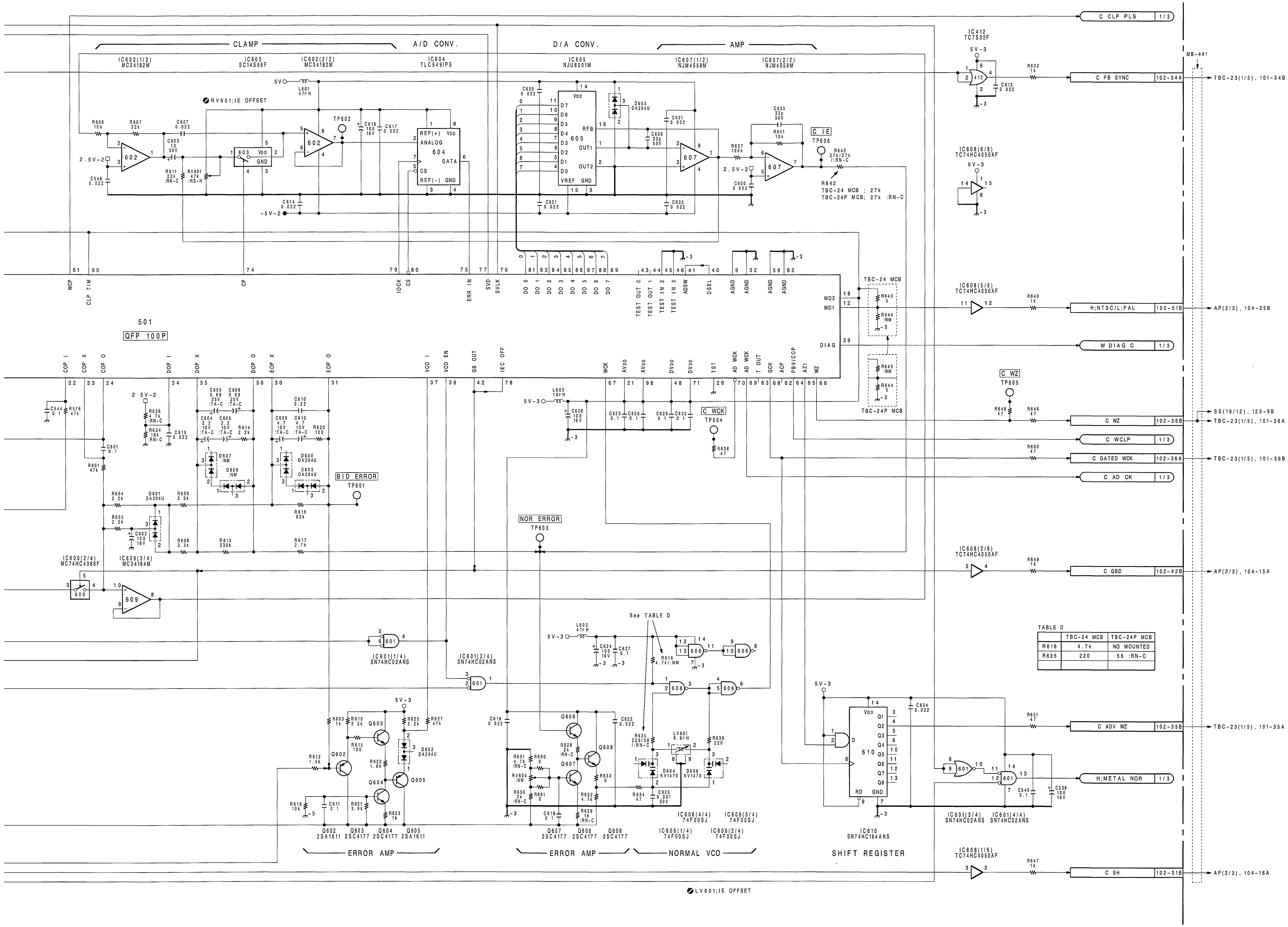

TABLE D

	TBC-24 MCB	TBC-24P MCB
R616	4.7k	NO MOUNTED
R635	220	56 :RN-C

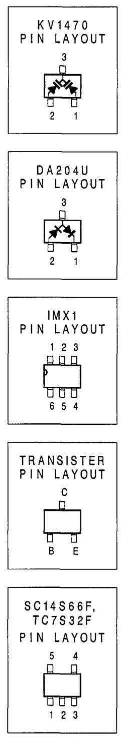

C Write Clock Generator

TBC-24 BOARD (3/3)

BOARD NO. 1-648-542-12
BOARD'S LOT NO. 305-402
DVW-A500 (J, UC) :TBC-24 MCB
DVW-A500P (EK) :TBC-24P MCB
DVW-A500P (UC) :TBC-24P MCB
DVW-A510 (J, UC) :TBC-24 MCB
DVW-A510P (EK) :TBC-24P MCB
DVW-CA510 (UC) :TBC-24 MCB
DVW-CA510P(EK) :TBC-24P MCB

DVW-TBC24-ALL-A-PB-S/M-05-B

 TBC-24 (1/3)

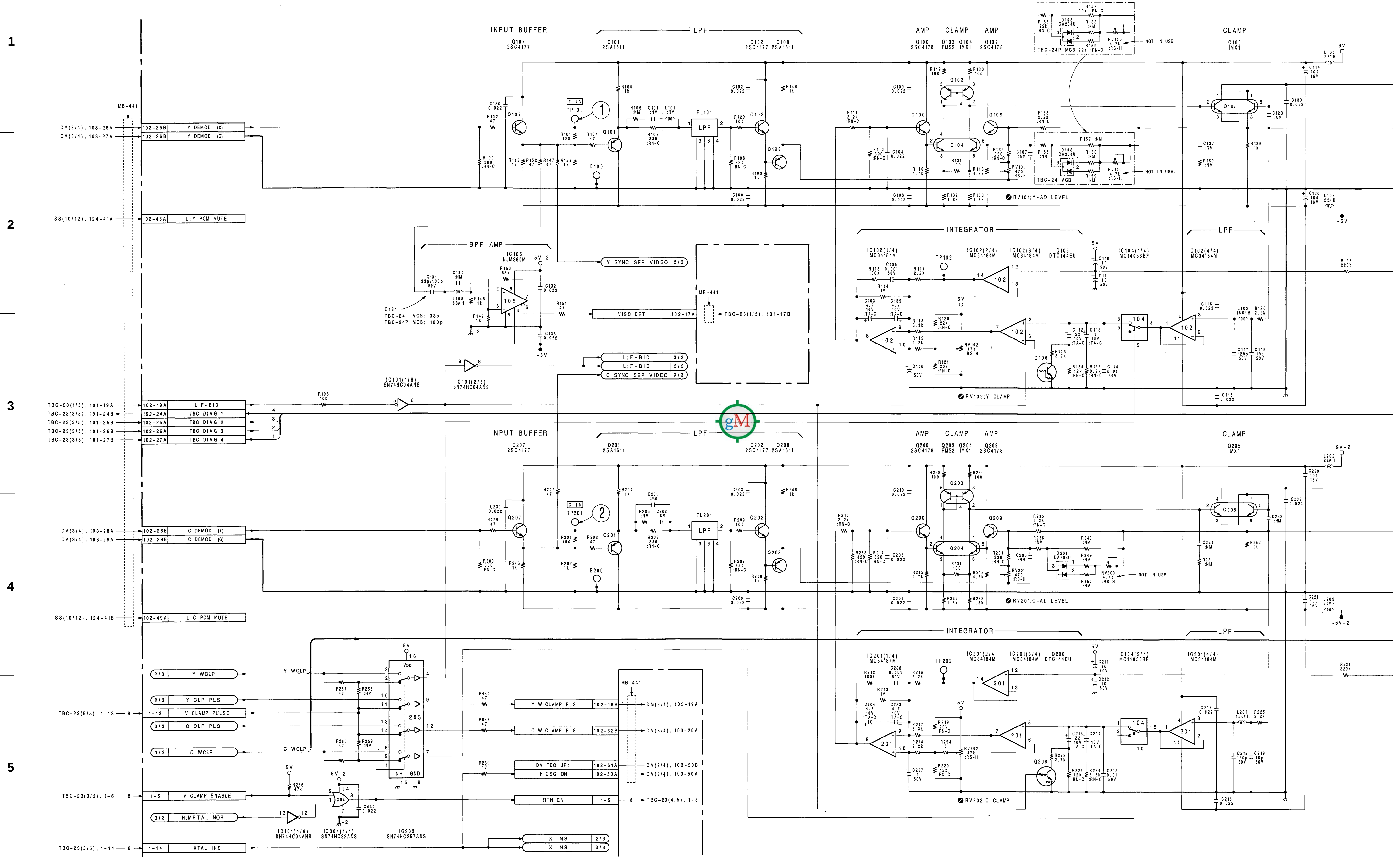

 1-100 (a)

A B C D E F G H

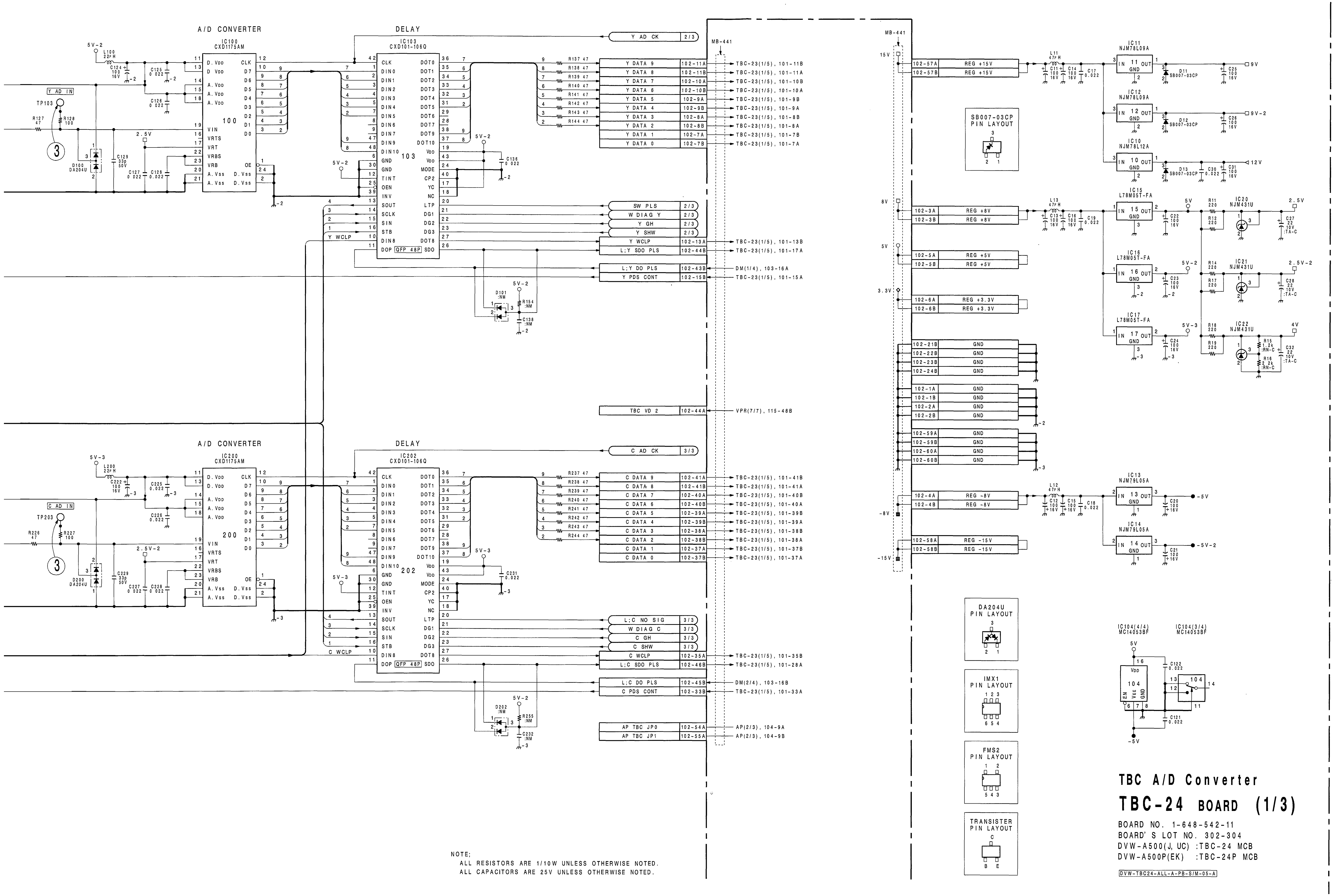
A/D CONVERTER
IC100
CXD1175AM
DELAY
IC103
CXD101-106Q
A/D CONVERTER
IC200
CXD1175AM
DELAY
IC202
CXD101-106Q
SB007-03CP
PIN LAYOUT
DA204U
PIN LAYOUT
IMX1
PIN LAYOUT
FMS2
PIN LAYOUT
TRANSISTER
PIN LAYOUT
IC104(4/4)
MC14053BF
IC104(3/4)
MC14053BF
NOTE;
ALL RESISTORS ARE 1/10W UNLESS OTHERWISE NOTED.
ALL CAPACITORS ARE 25V UNLESS OTHERWISE NOTED.
TBC A/D Converter
TBC-24 BOARD (1/3)
BOARD NO. 1-648-542-11
BOARD'S LOT NO. 302-304
DVW-A500(J, UC) :TBC-24 MCB
DVW-A500P(EK) :TBC-24P MCB
DVW-TBC24-ALL-A-PB-S/M-05-A

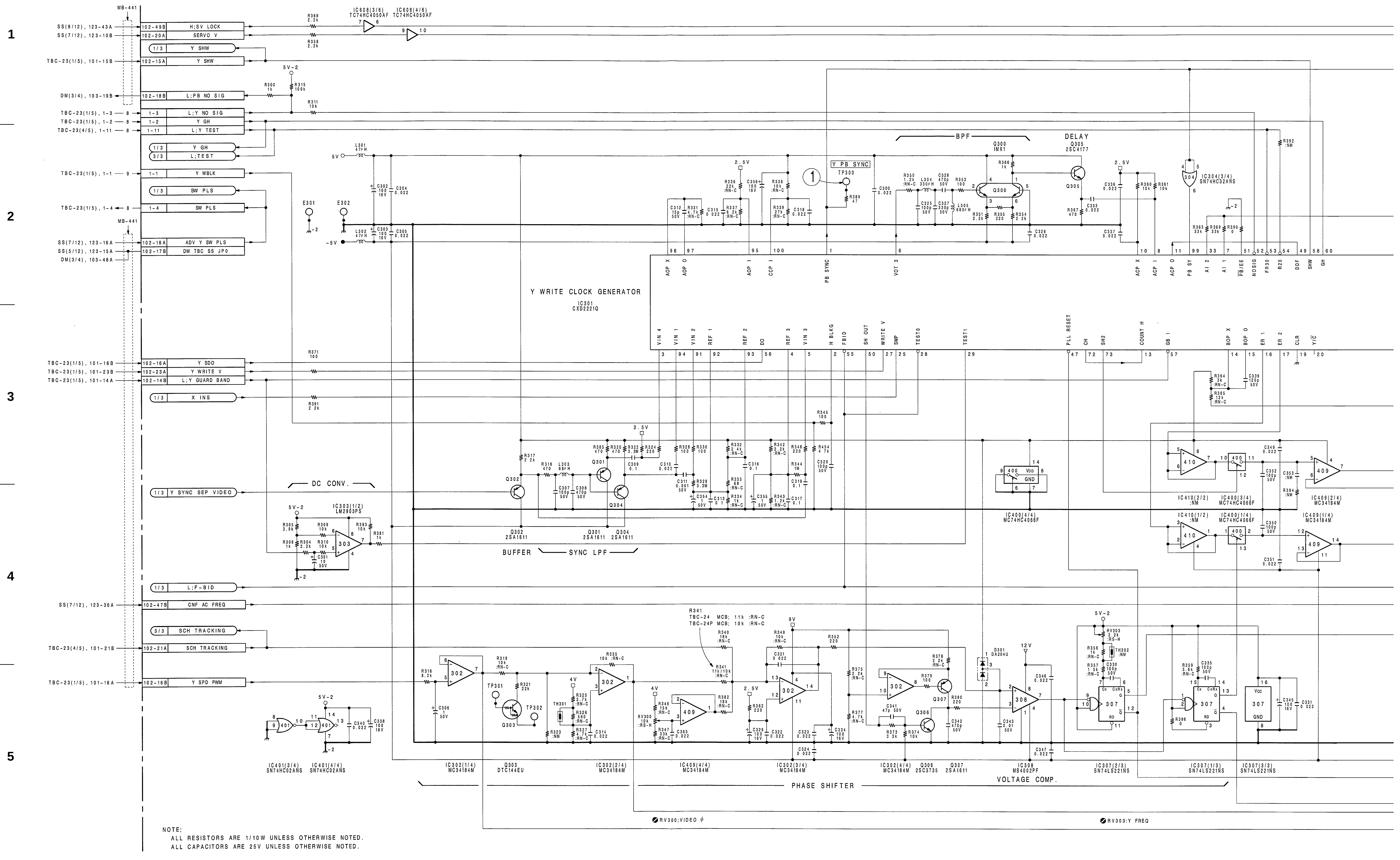
Y WRITE CLOCK GENERATOR
IC301
CXD2221Q
BPF
DELAY
Y PB SYNC
DC CONV.
BUFFER
SYNC LPF
PHASE SHIFTER
VOLTAGE COMP.
RV300:VIDEO φ
RV303:Y FREQ
H;SV LOCK
SERVO V
Y SHW
L;PB NO SIG
L;Y NO SIG
Y GH
L;Y TEST
L;TEST
Y WBLK
SW PLS
ADV Y SW PLS
DM TBC SS JPO
Y SDO
Y WRITE V
L;Y GUARD BAND
X INS
Y SYNC SEP VIDEO
L;F-BID
CNF AC FREQ
SCH TRACKING
Y SPD PWM
NOTE;
ALL RESISTORS ARE 1/10W UNLESS OTHERWISE NOTED.
ALL CAPACITORS ARE 25V UNLESS OTHERWISE NOTED.

A | B | C | D | E | F | G | H

The Ref.Nos.marked with ** on the schematic diagram in this page are not printed on the printed circuit board (of the following board No.) with silk screen.

TBC-24 BOARD: 1-648-542-11

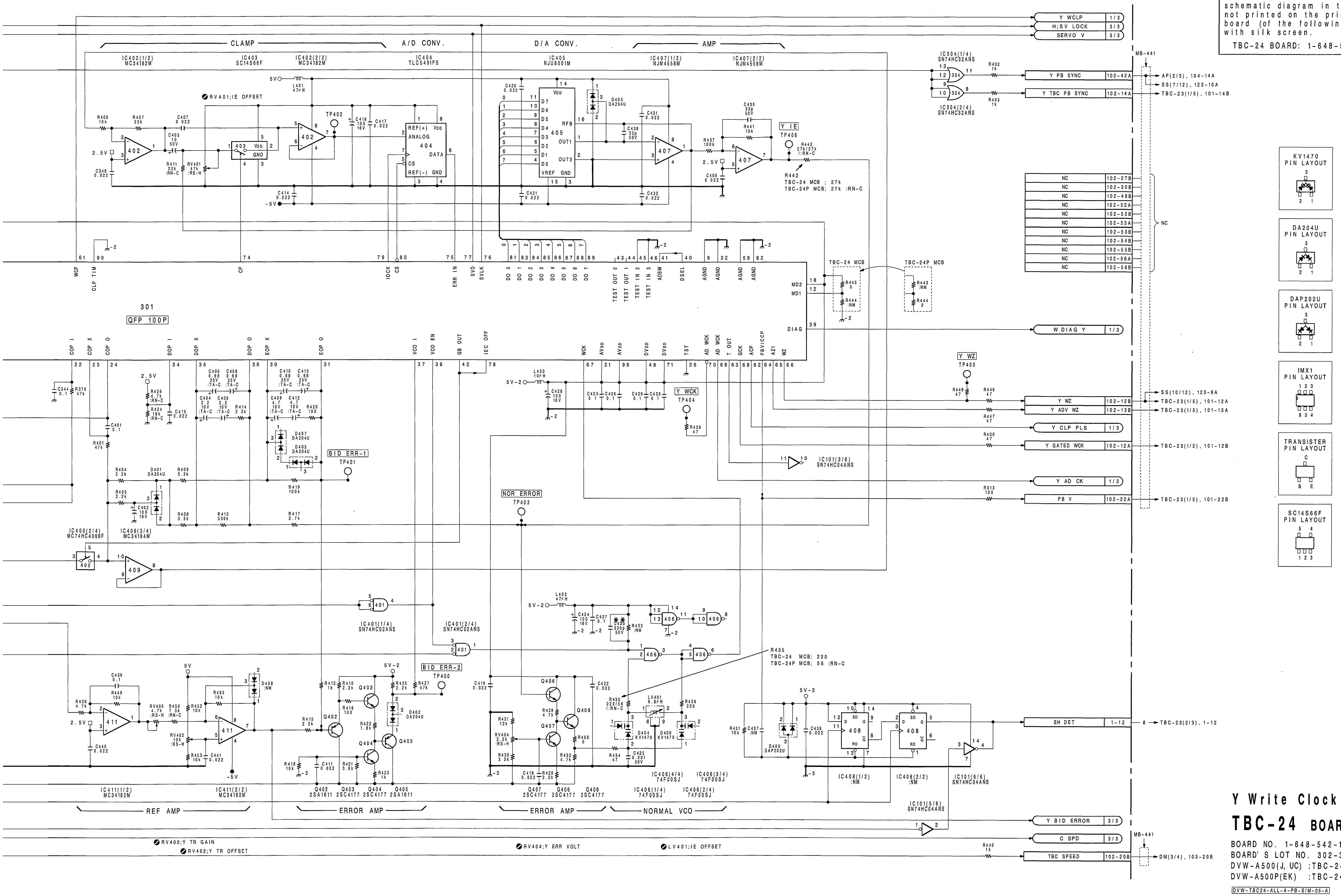

Y Write Clock Generator

TBC-24 BOARD (2/3)

BOARD NO. 1-648-542-11
BOARD' S LOT NO. 302-304
DVW-A500(J, UC) :TBC-24 MCB
DVW-A500P(EK) :TBC-24P MCB

DVW-TBC24-ALL-A-PB-S/M-05-A

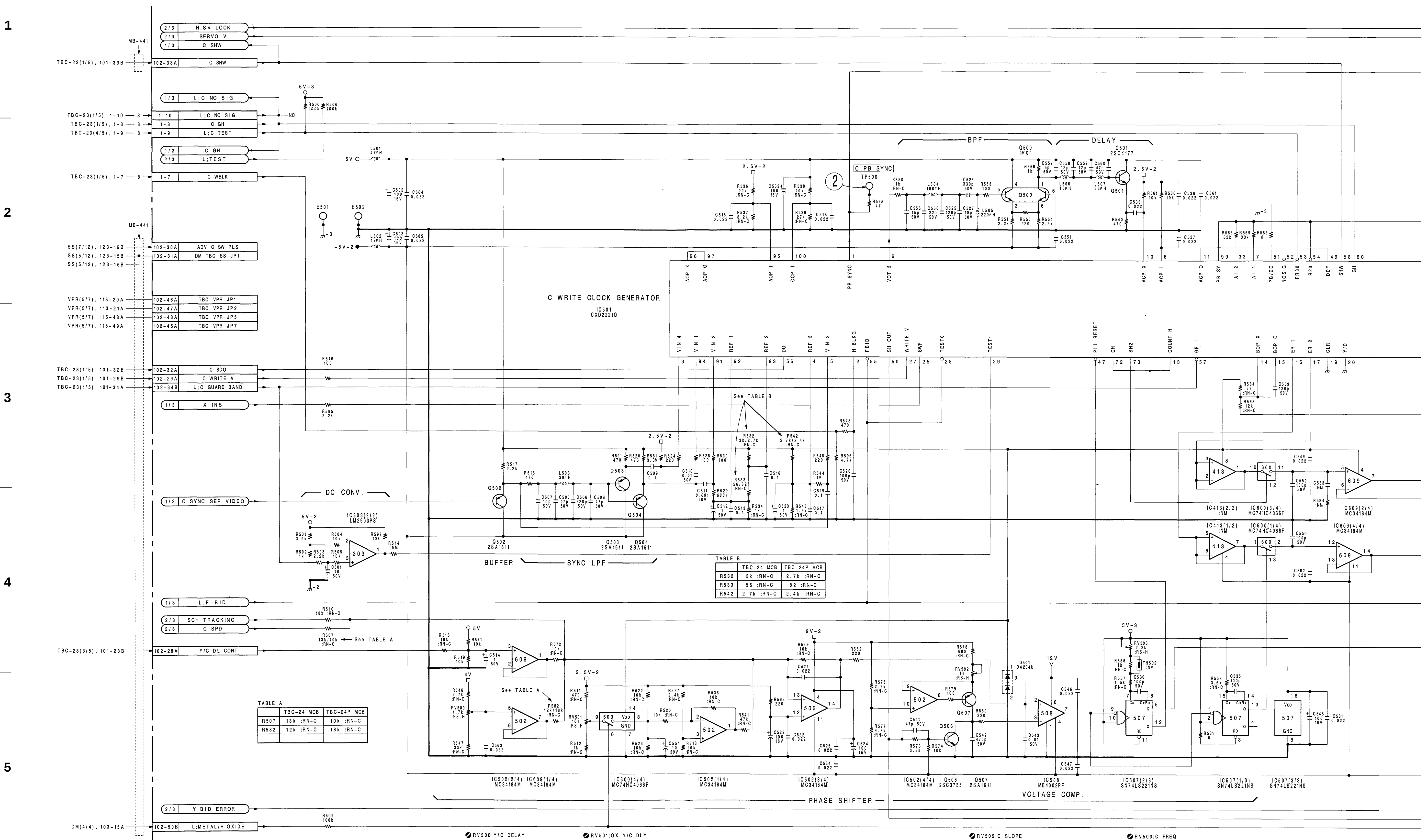

TABLE A

	TBC-24 MCB	TBC-24P MCB
R507	13k :RN-C	10k :RN-C
R582	12k :RN-C	18k :RN-C

TABLE B

	TBC-24 MCB	TBC-24P MCB
R532	3k :RN-C	2.7k :RN-C
R533	56 :RN-C	82 :RN-C
R542	2.7k :RN-C	2.4k :RN-C

NOTE;
ALL RESISTORS ARE 1/10W UNLESS OTHERWISE NOTED.
ALL CAPACITORS ARE 25V UNLESS OTHERWISE NOTED.

http://getMANUAL.com

The Ref.Nos.marked with ** on the schematic diagram in this page are not printed on the printed circuit board (of the following board No.) with silk screen.

TBC-24 BOARD: 1-648-542-11

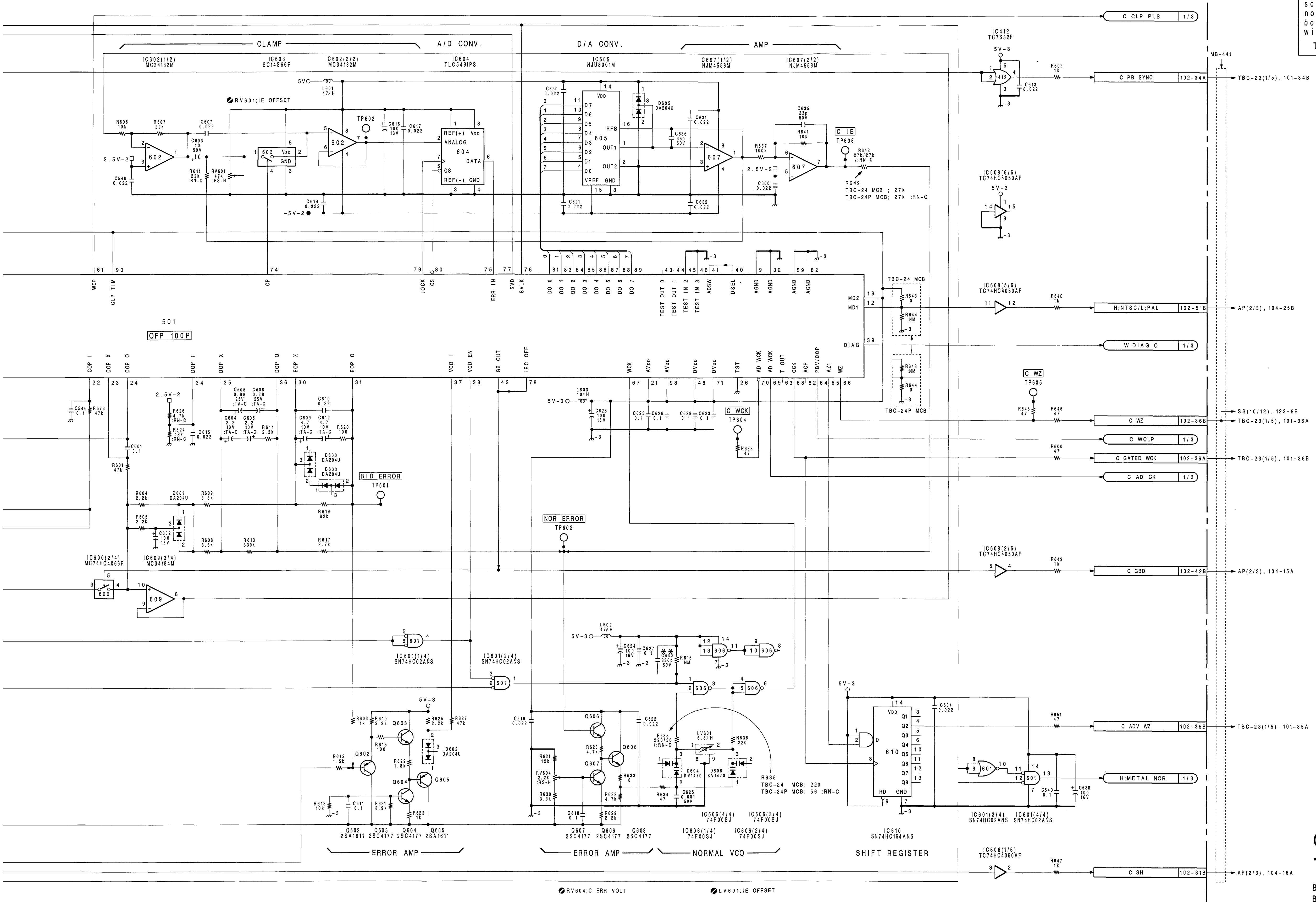

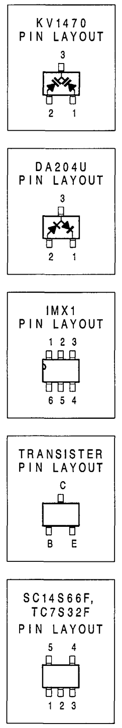

C Write Clock Generator

TBC-24 BOARD (3/3)

BOARD NO. 1-648-542-11
BOARD' S LOT NO. 302-304
DVW-A500(J, UC) :TBC-24 MCB
DVW-A500P(EK) :TBC-24P MCB

DVW-TBC24-ALL-A-PB-S/M-05-A

 TBC-23 (1/5)

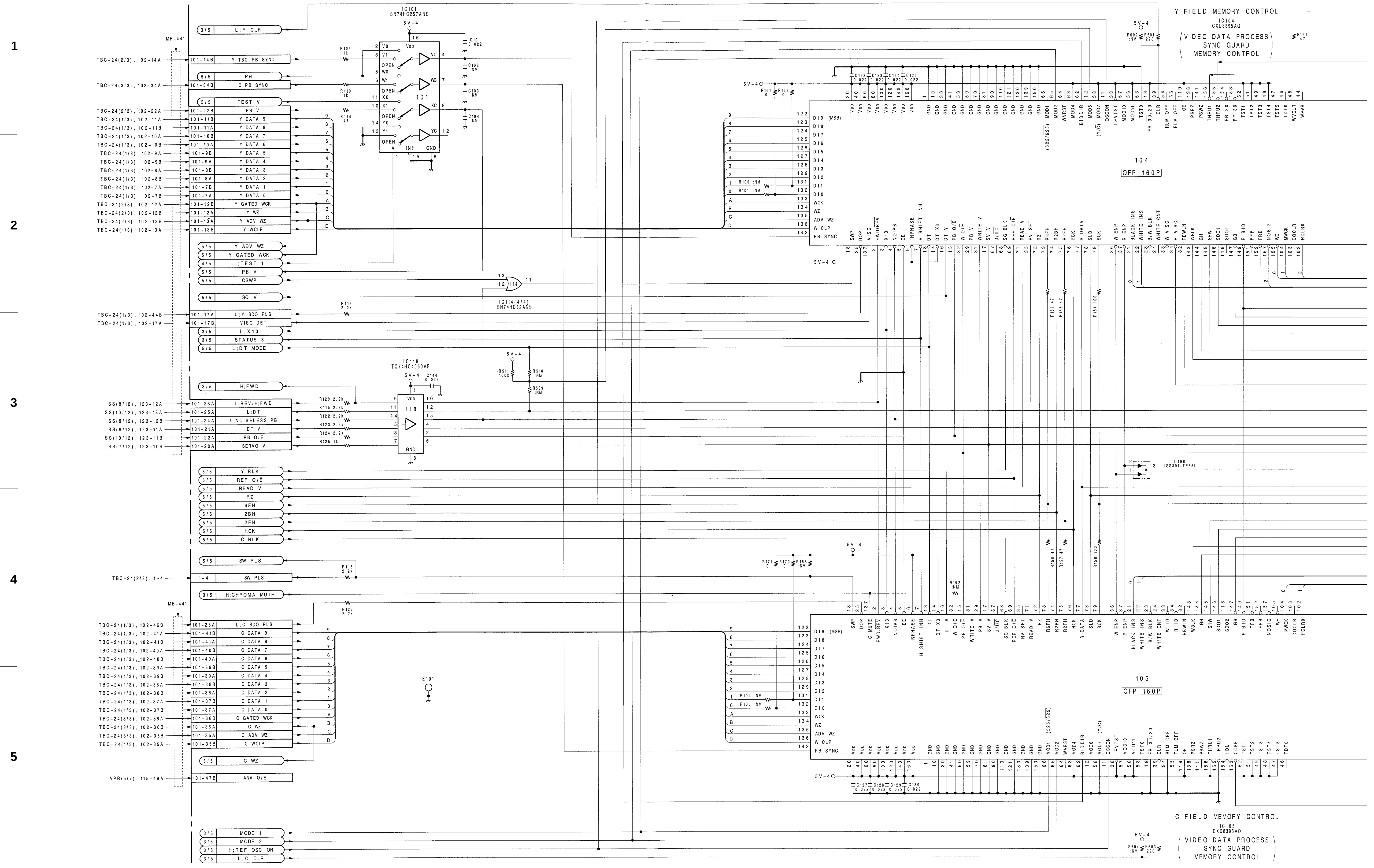

 1-106 (c)

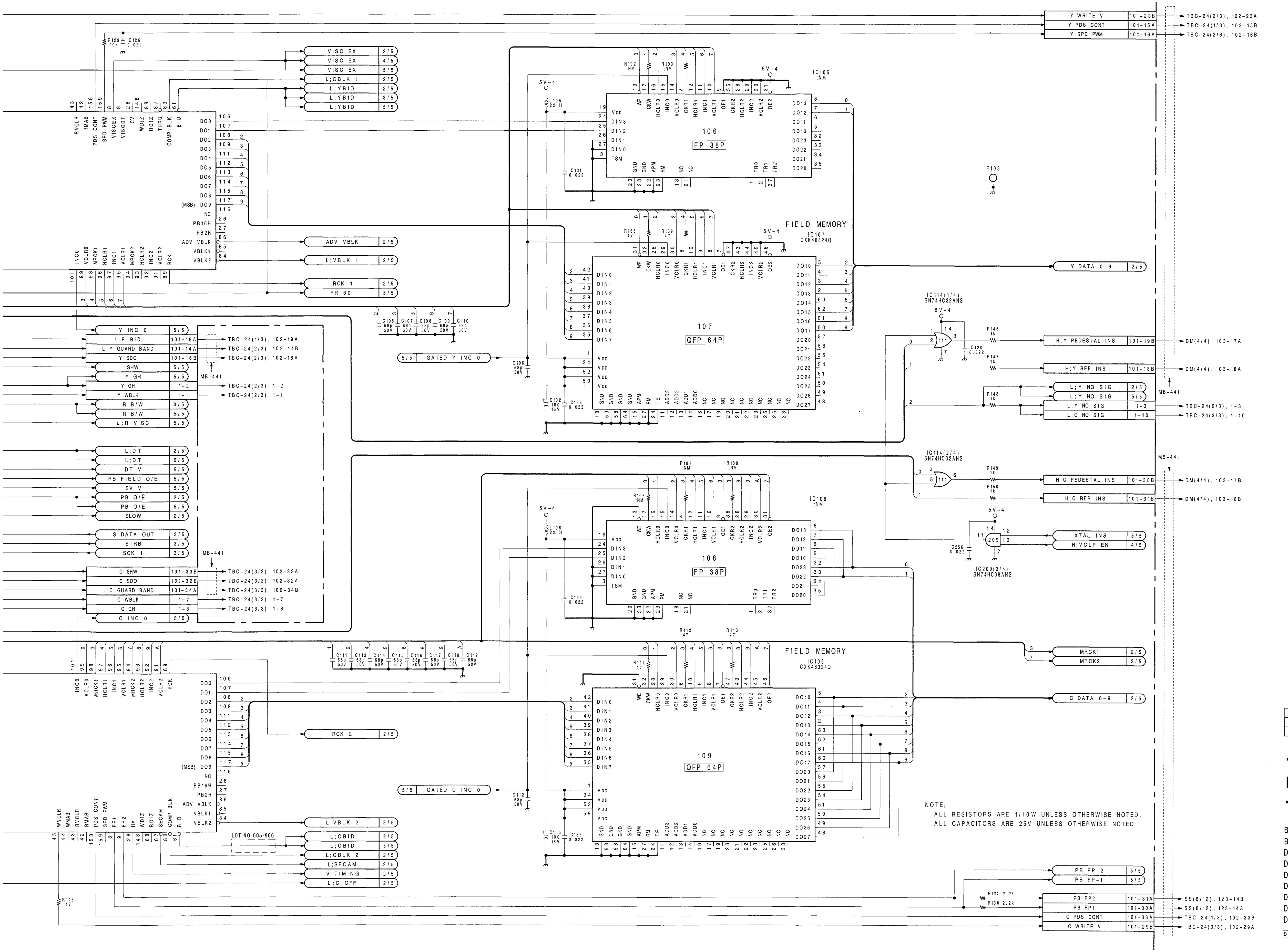

LOT NO.	BOARD NO.
605-802	1-648-543-15
803-	1-648-543-16

Y/C Data Memory Control, Field Memory

TBC-23 BOARD (1/5)

BOARD NO. 1-648-543-15,16
BOARD'S LOT NO. 605-
DVW-A500 (J, UC) :TBC-23 MCB
DVW-A500P (EK) :TBC-23P MCB
DVW-A500P (UC) :TBC-23PG MCB
DVW-A510 (J, UC) :TBC-23 MCB
DVW-A510P (EK) :TBC-23P MCB
DVW-CA510(J, UC) :TBC-23 MCB
DVW-CA510P(EK) :TBC-23P MCB

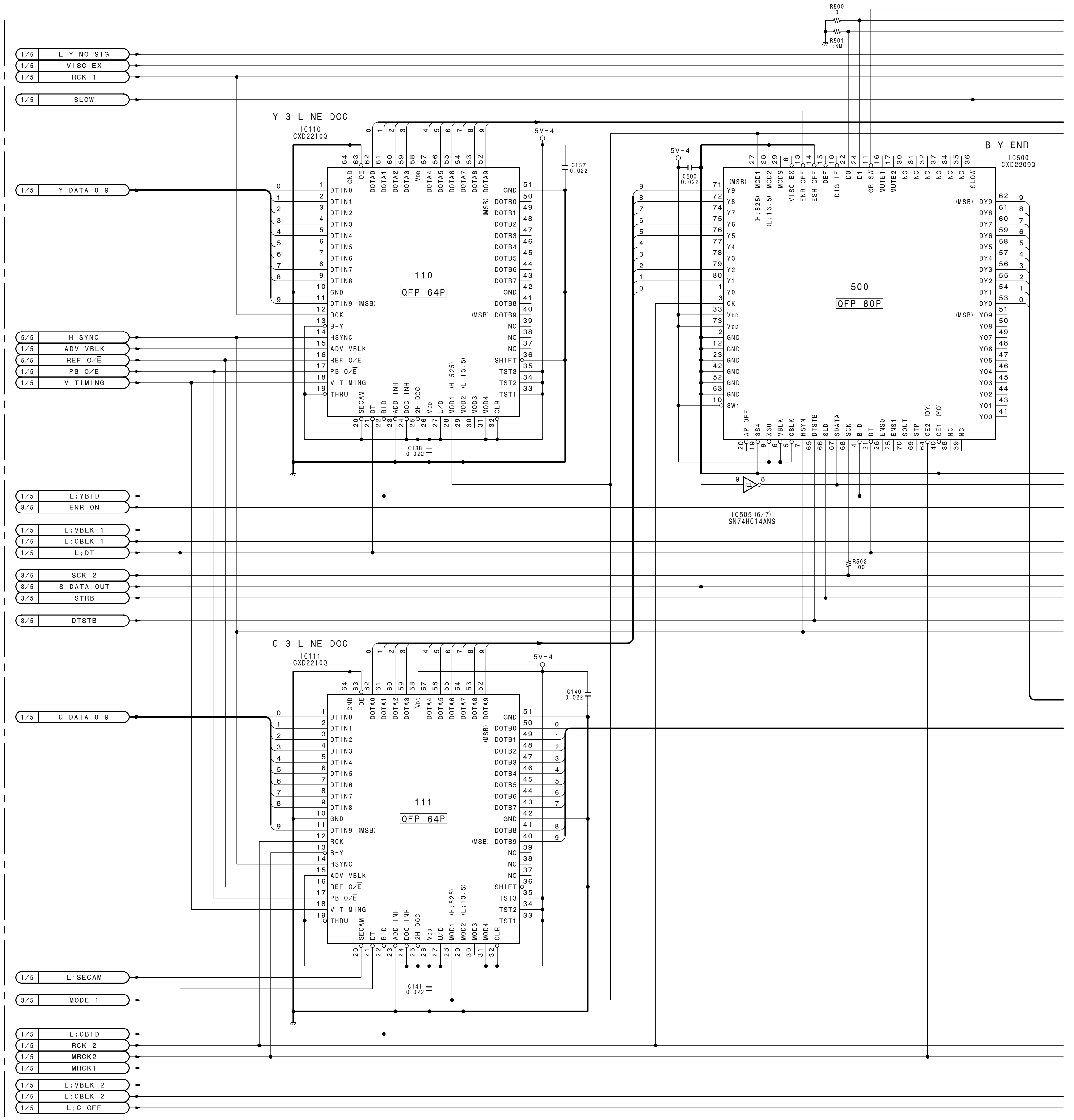
Y 3 LINE DOC
IC110
CXD2210Q
110
QFP 64P
C 3 LINE DOC
IC111
CXD2210Q
111
QFP 64P
B-Y ENR
IC500
CXD2209Q
500
QFP 80P
IC505 (6/7)
SN74HC14ANS
5V-4
R500
R501
R502
C137
C138
C140
C141
C500
L:Y NO SIG
VISC EX
RCK 1
SLOW
Y DATA 0-9
H SYNC
ADV VBLK
REF O/E
PB O/E
V TIMING
L:YBID
ENR ON
L:VBLK 1
L:CBLK 1
L:DT
SCK 2
S DATA OUT
STRB
DTSTB
C DATA 0-9
L:SECAM
MODE 1
L:CBID
RCK 2
MRCK2
MRCK1
L:VBLK 2
L:CBLK 2
L:C OFF

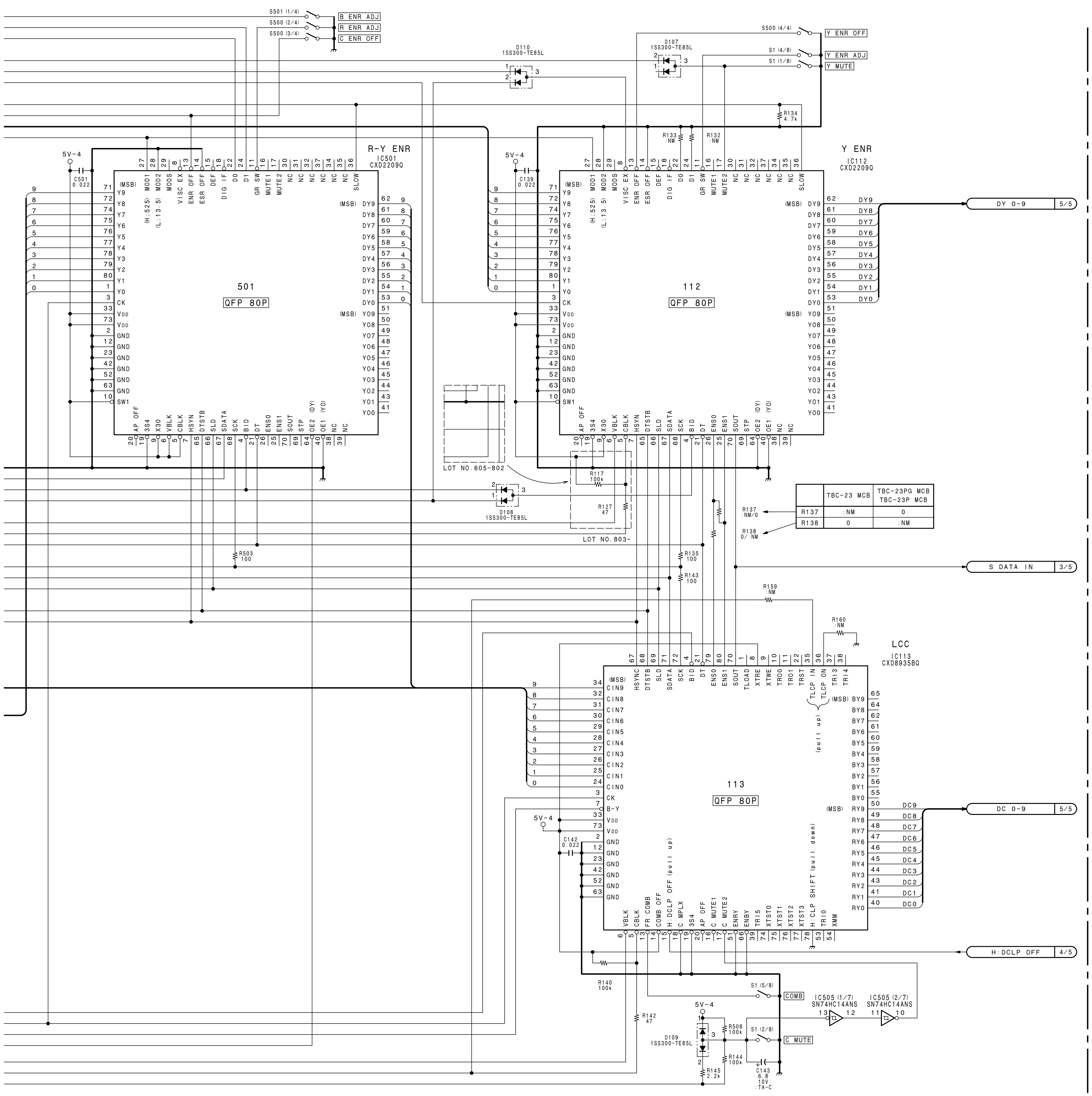

	TBC-23 MCB	TBC-23PG MCB TBC-23P MCB
R137	:NM	0
R138	0	:NM

NOTE:
ALL RESISTORS ARE 1/10W UNLESS OTHERWISE NOTED.
ALL CAPACITORS ARE 25V UNLESS OTHERWISE NOTED.

1SS300-TE85L
PIN LAYOUT

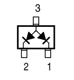

LOT NO.	BOARD NO.
605-802	1-648-543-15
803-	1-648-543-16

TBC Sequence

TBC-23 BOARD (2/5)

BOARD NO. 1-648-543-15, 16
BOARD'S LOT NO. 605-
DVW-A500 (J, UC) : TBC-23 MCB
DVW-A500P (EK) : TBC-23P MCB
DVW-A500P (UC) : TBC-23PG MCB
DVW-500 (J, UC) : TBC-23 MCB
DVW-500P (EK) : TBC-23P MCB
DVW-500P (UC) : TBC-23PG MCB

DVW-TBC23-ALL-A-PB-S/M-04-C

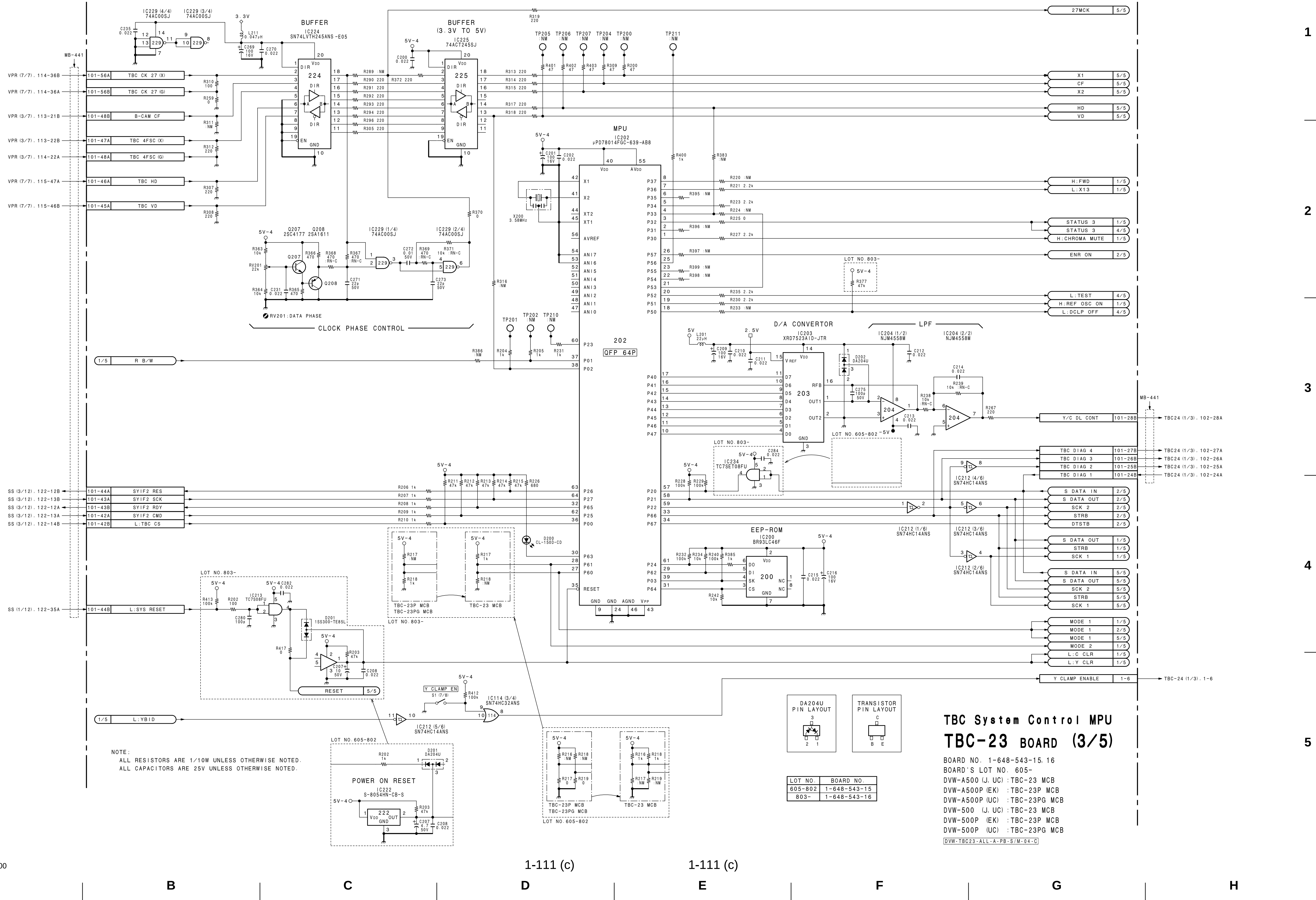
BUFFER
IC224
SN74LVTH245ANS-E05
BUFFER
(3.3V TO 5V)
IC225
74ACT245SJ
MPU
IC202
μPD78014FGC-639-AB8
202
QFP 64P
CLOCK PHASE CONTROL
RV201:DATA PHASE
D/A CONVERTOR
IC203
XRD7523AID-JTR
LPF
IC204 (1/2)
NJM4558M
IC204 (2/2)
NJM4558M
EEP-ROM
IC200
BR93LC46F
POWER ON RESET
IC222
S-8054HN-CB-S
NOTE:
ALL RESISTORS ARE 1/10W UNLESS OTHERWISE NOTED.
ALL CAPACITORS ARE 25V UNLESS OTHERWISE NOTED.
DA204U PIN LAYOUT
TRANSISTOR PIN LAYOUT
LOT NO. | BOARD NO.
605-802 | 1-648-543-15
803- | 1-648-543-16
TBC System Control MPU
TBC-23 BOARD (3/5)
BOARD NO. 1-648-543-15.16
BOARD'S LOT NO. 605-
DVW-A500 (J. UC) :TBC-23 MCB
DVW-A500P (EK) :TBC-23P MCB
DVW-A500P (UC) :TBC-23PG MCB
DVW-500 (J. UC) :TBC-23 MCB
DVW-500P (EK) :TBC-23P MCB
DVW-500P (UC) :TBC-23PG MCB
DVW-TBC23-ALL-A-PB-S/M-04-C

1

2

3

4

5

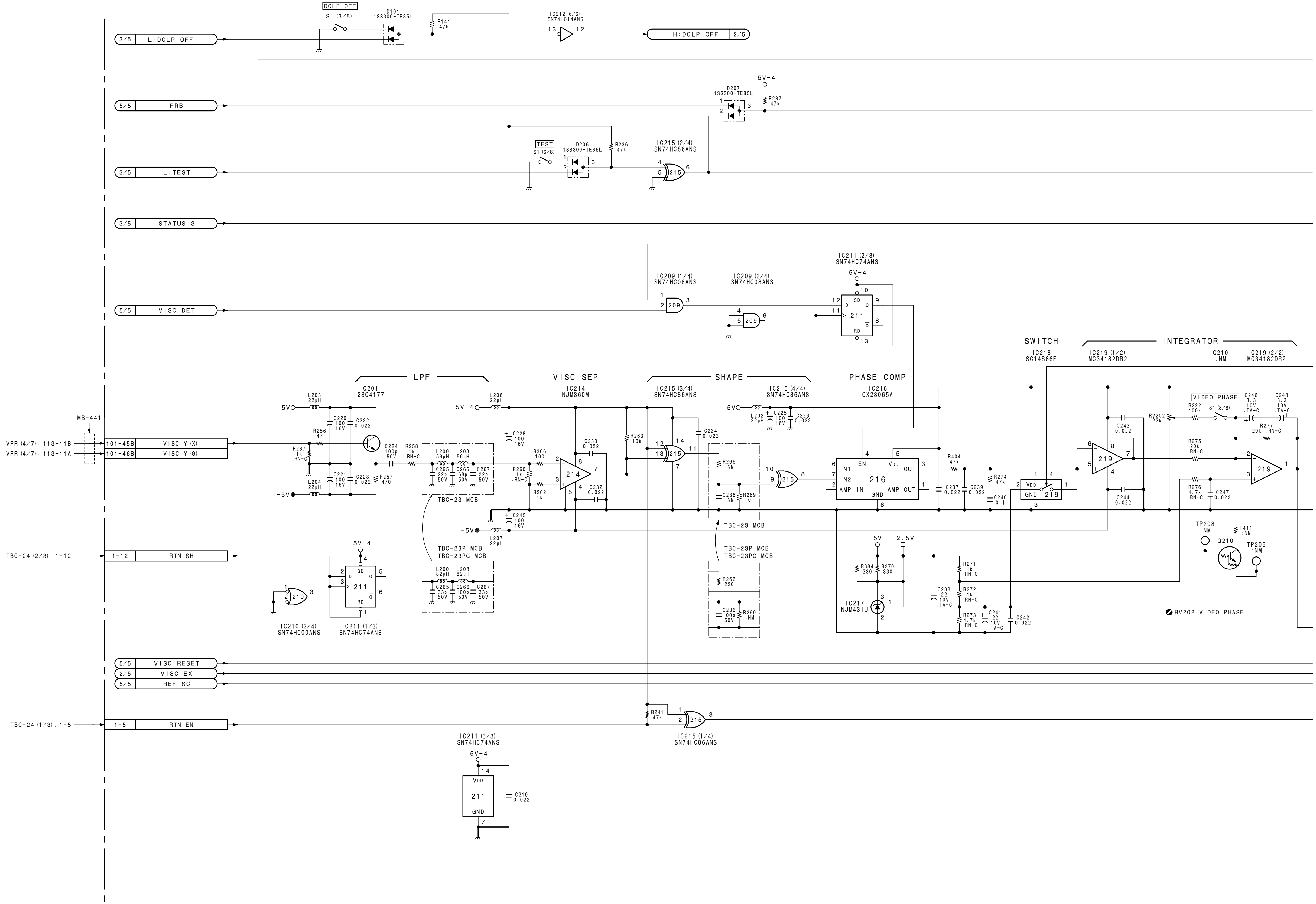

NOTE:
ALL RESISTORS ARE 1/10W UNLESS OTHERWISE NOTED.
ALL CAPACITORS ARE 25V UNLESS OTHERWISE NOTED.

A B C D E F G H

 TBC-23 (4/5)

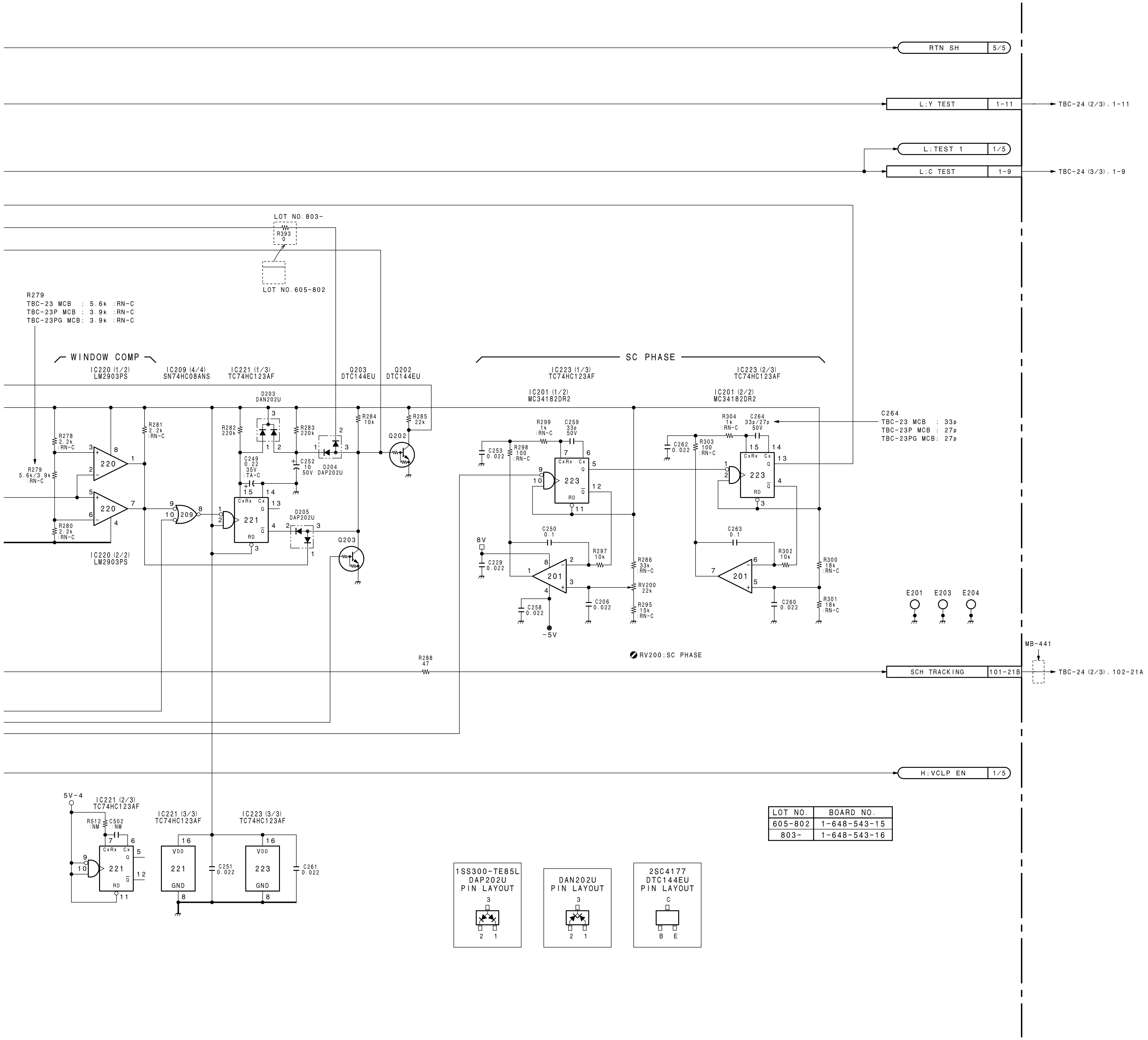

LOT NO.	BOARD NO.
605-802	1-648-543-15
803-	1-648-543-16

VISC Phase Detector

TBC-23 BOARD (4/5)

BOARD NO. 1-648-543-15, 16
BOARD'S LOT NO. 605-
DVW-A500 (J, UC) : TBC-23 MCB
DVW-A500P (EK) : TBC-23P MCB
DVW-A500P (UC) : TBC-23PG MCB
DVW-500 (J, UC) : TBC-23 MCB
DVW-500P (EK) : TBC-23P MCB
DVW-500P (UC) : TBC-23PG MCB

DVW-TBC23-ALL-A-PB-S/M-04-C

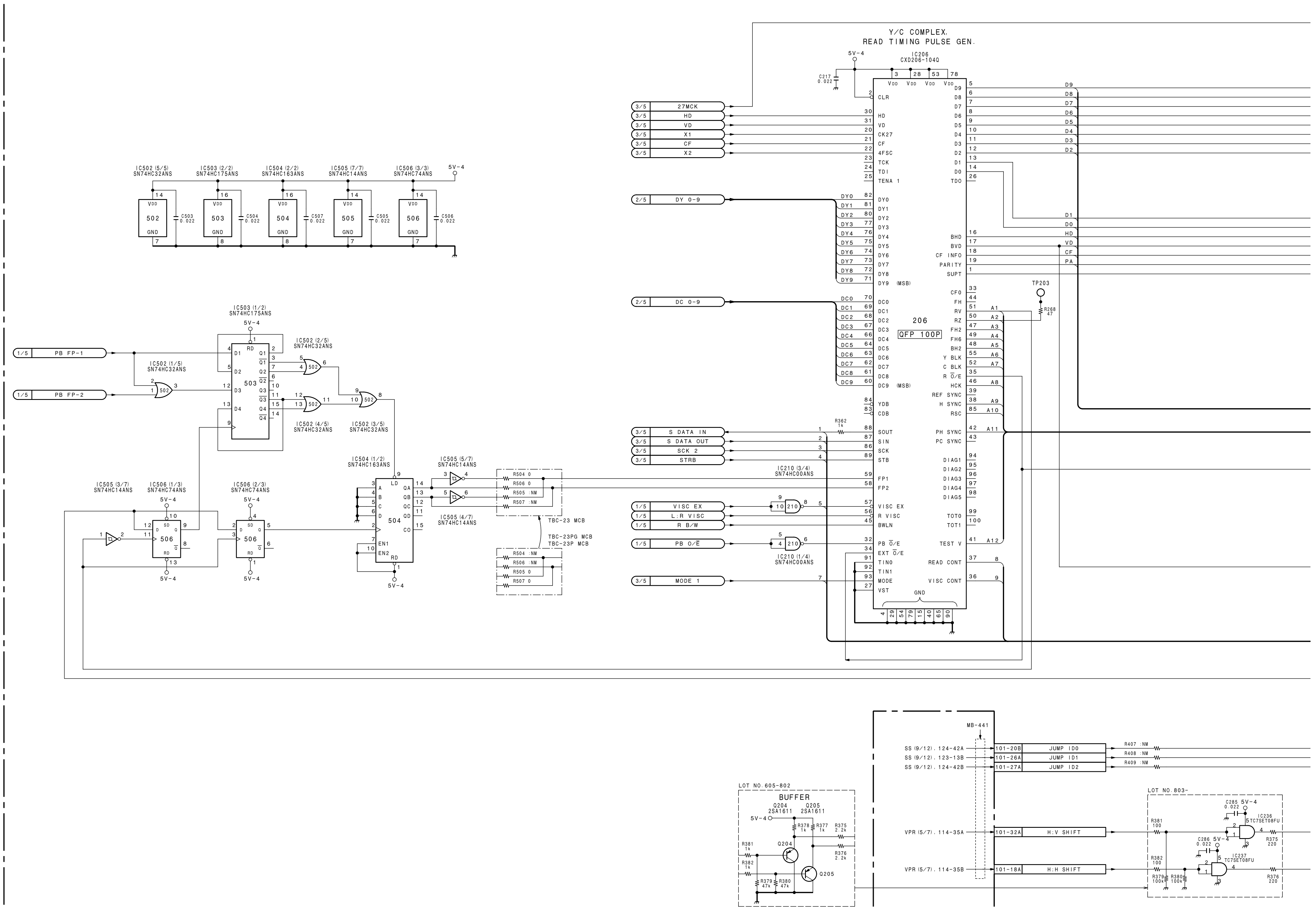
Y/C COMPLEX,
READ TIMING PULSE GEN.
IC206
CXD206-104Q
206
QFP 100P
5V-4
C217 0.022
27MCK
HD
VD
X1
CF
X2
DY 0-9
DC 0-9
S DATA IN
S DATA OUT
SCK 2
STRB
VISC EX
L:R VISC
R B/W
PB O/E
MODE 1
PB FP-1
PB FP-2
TP203
R268 47
R362 1k
IC210 (3/4)
SN74HC00ANS
IC210 (1/4)
SN74HC00ANS
IC502 (5/5)
SN74HC32ANS
IC503 (2/2)
SN74HC175ANS
IC504 (2/2)
SN74HC163ANS
IC505 (7/7)
SN74HC14ANS
IC506 (3/3)
SN74HC74ANS
IC503 (1/2)
SN74HC175ANS
IC502 (2/5)
SN74HC32ANS
IC502 (1/5)
SN74HC32ANS
IC502 (4/5)
SN74HC32ANS
IC502 (3/5)
SN74HC32ANS
IC504 (1/2)
SN74HC163ANS
IC505 (5/7)
SN74HC14ANS
IC505 (4/7)
SN74HC14ANS
IC505 (3/7)
SN74HC14ANS
IC506 (1/3)
SN74HC74ANS
IC506 (2/3)
SN74HC74ANS
TBC-23 MCB
TBC-23PG MCB
TBC-23P MCB
MB-441
SS (9/12) : 124-42A
SS (9/12) : 123-13B
SS (9/12) : 124-42B
JUMP ID0
JUMP ID1
JUMP ID2
R407 :NM
R408 :NM
R409 :NM
VPR (5/7) : 114-35A
VPR (5/7) : 114-35B
H:V SHIFT
H:H SHIFT
LOT NO.605-802
BUFFER
Q204 2SA1611
Q205 2SA1611
LOT NO.803-
IC236 TC7SET08FU
IC237 TC7SET08FU

http://getMANUAL.com

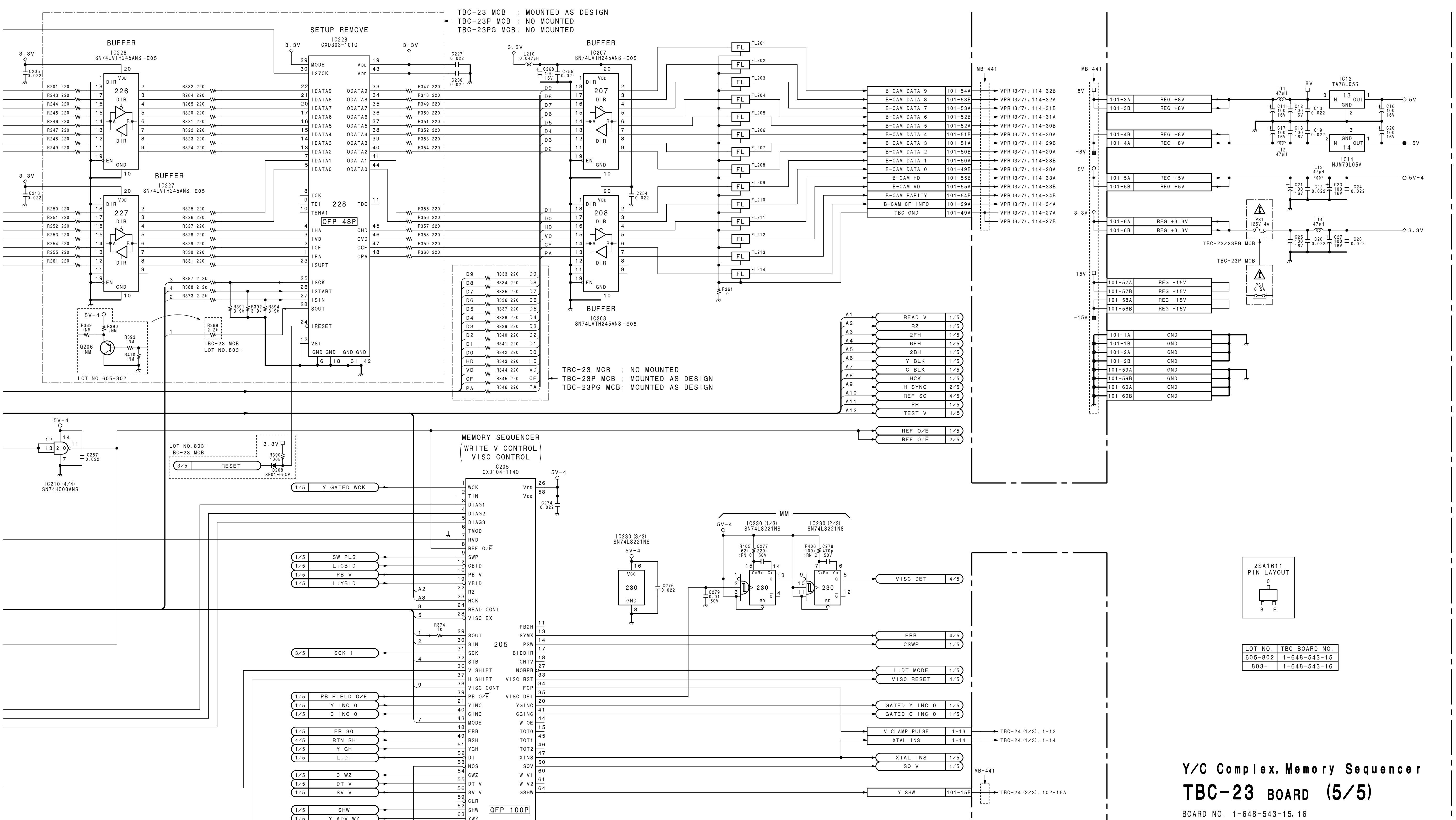

NOTE:
ALL RESISTORS ARE 1/10W UNLESS OTHERWISE NOTED.
ALL CAPACITORS ARE 25V UNLESS OTHERWISE NOTED.

Y/C Complex, Memory Sequencer

TBC-23 BOARD (5/5)

BOARD NO. 1-648-543-15, 16
BOARD'S LOT NO. 605-
DVW-A500 (J, UC) : TBC-23 MCB
DVW-A500P (EK) : TBC-23P MCB
DVW-A500P (UC) : TBC-23PG MCB
DVW-500 (J, UC) : TBC-23 MCB
DVW-500P (EK) : TBC-23P MCB
DVW-500P (UC) : TBC-23PG MCB
DVW-TBC23-ALL-A-PB-S/M-04-C

TBC-23 (1/5)

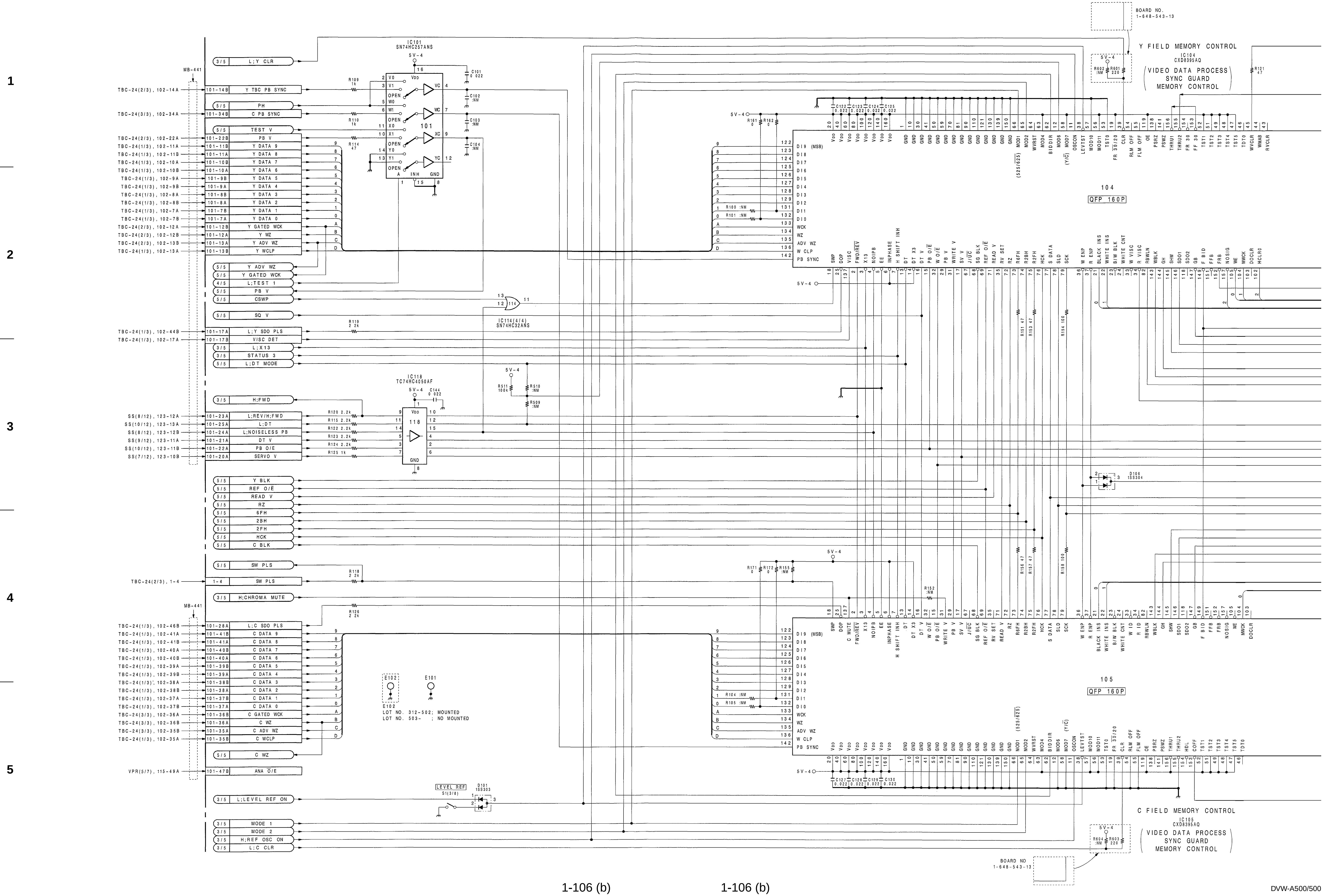

1-106 (b)

A | B | C | D | E | F | G | H

TBC-23 (1/5)

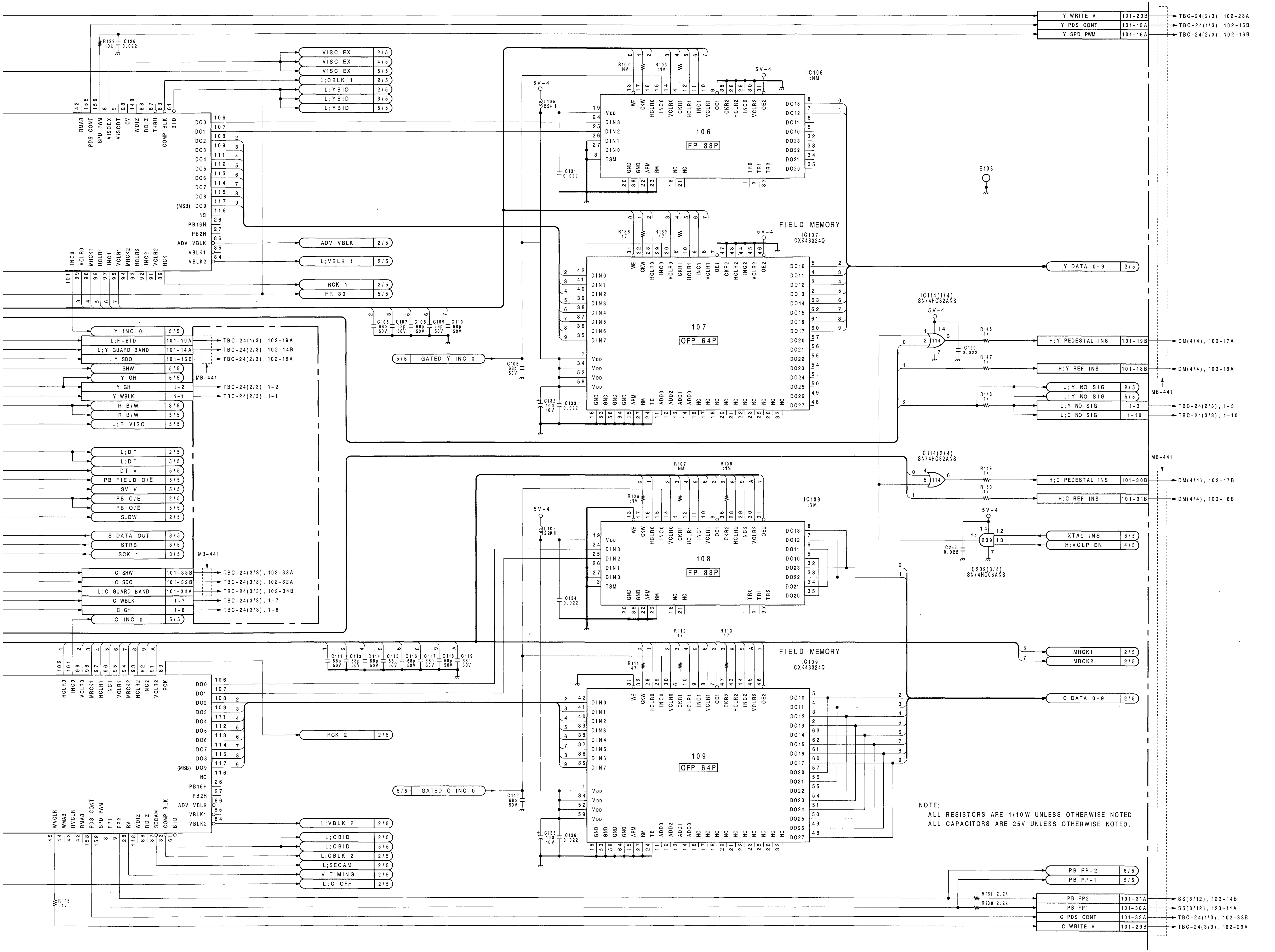

NOTE;
ALL RESISTORS ARE 1/10W UNLESS OTHERWISE NOTED.
ALL CAPACITORS ARE 25V UNLESS OTHERWISE NOTED.

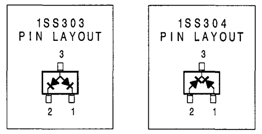

LOT NO.	BOARD NO.
312-412	1-648-543-13
501-603	1-648-543-14

Y/C Data Memory Control, Field Memory

TBC-23 BOARD (1/5)

BOARD NO. 1-648-543-13, 14
BOARD' S LOT NO. 312-603
DVW-A500 (J, UC) :TBC-23 MCB
DVW-A500P (EK) :TBC-23P MCB
DVW-A500P (UC) :TBC-23PG MCB
DVW-A510 (J, UC) :TBC-23 MCB
DVW-A510P (EK) :TBC-23P MCB
DVW-CA510(J, UC) :TBC-23 MCB
DVW-CA510P(EK) :TBC-23P MCB

DVW-TBC23-ALL-A-PB-S/M-04-B

I J K L M N O P

 TBC-23 (2/5)

1
2
3
4
5

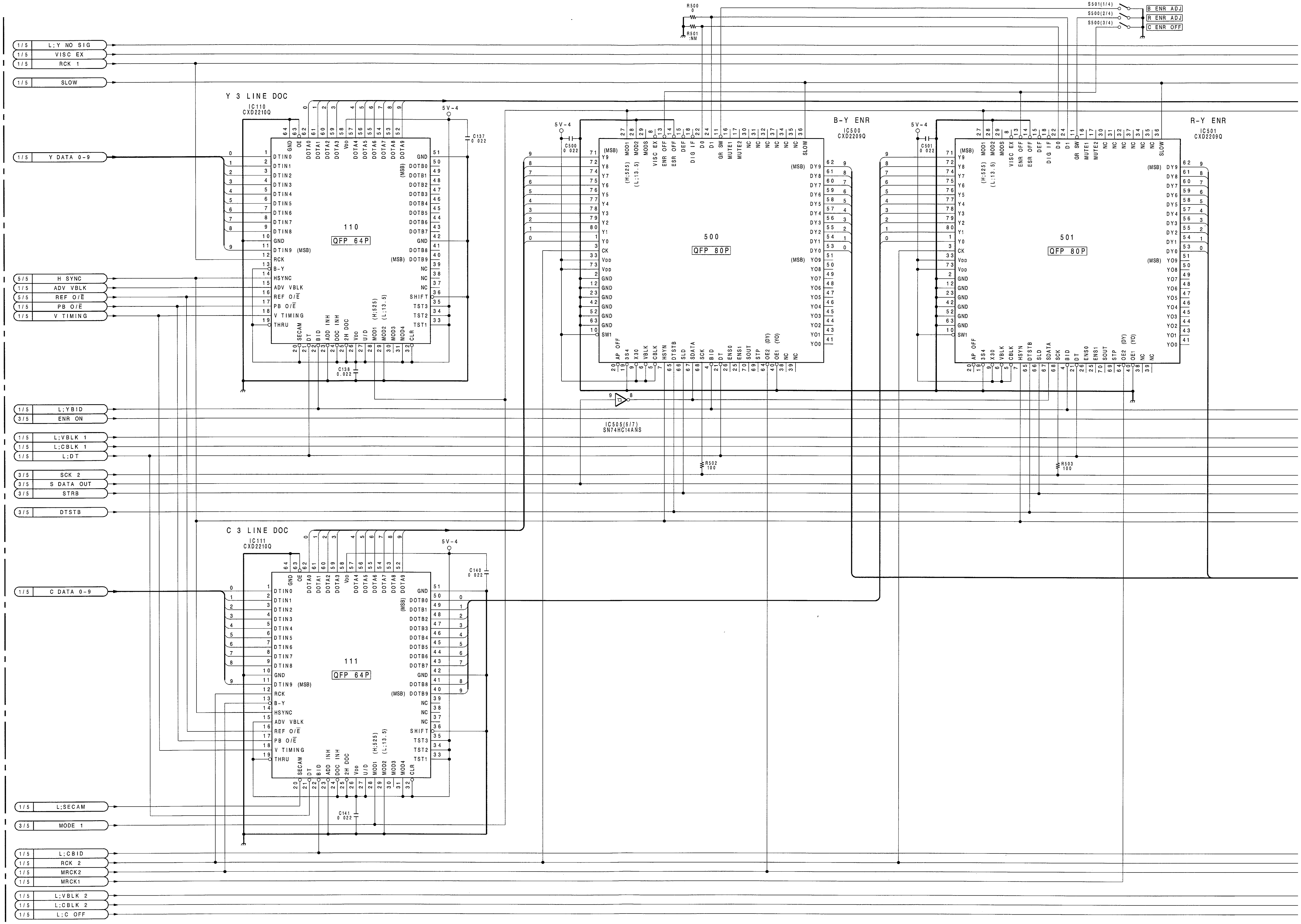

 1-108 (b)

A B C D E F G H

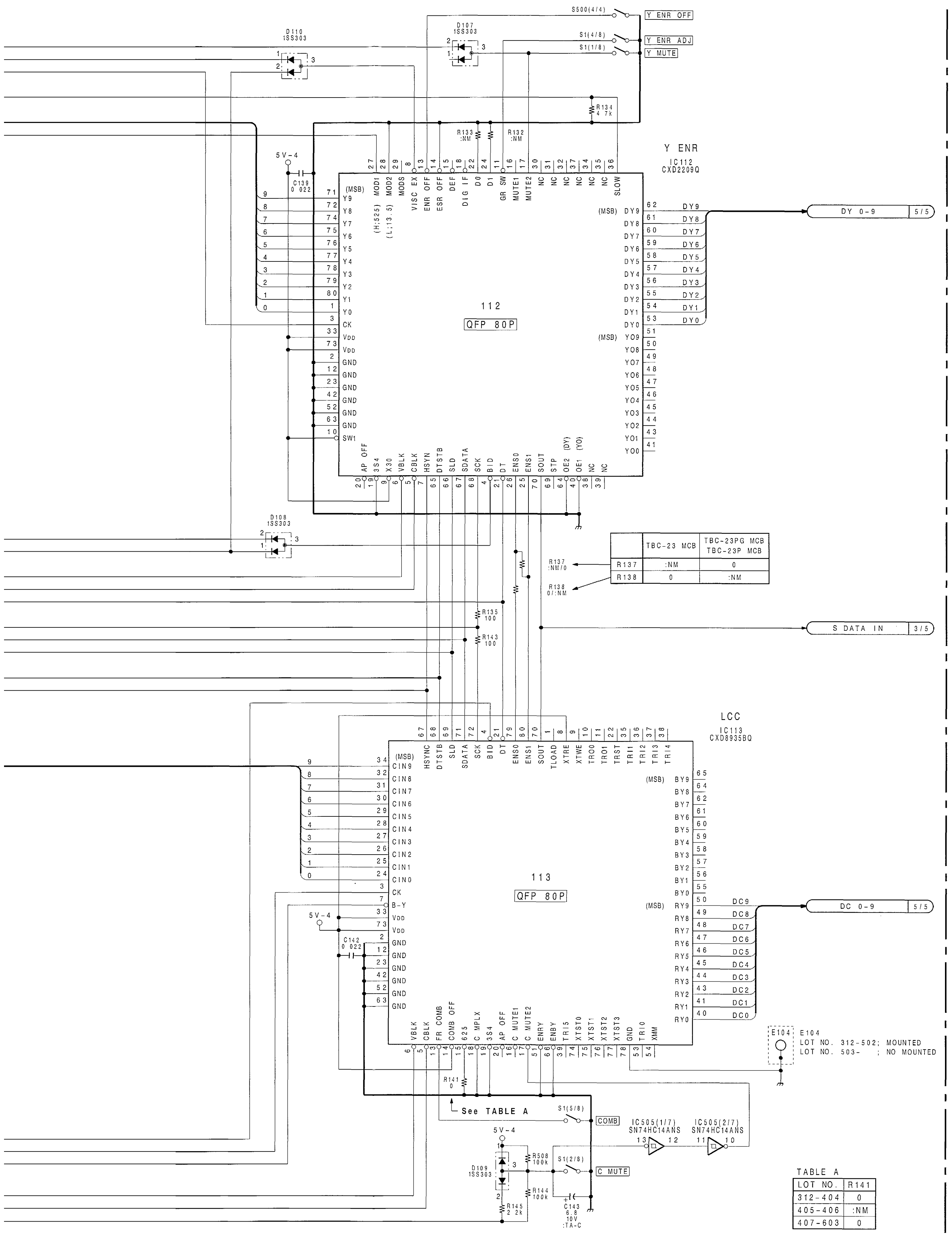

	TBC-23 MCB	TBC-23PG MCB TBC-23P MCB
R137	:NM	0
R138	0	:NM

TABLE A

LOT NO.	R141
312-404	0
405-406	:NM
407-603	0

NOTE;
ALL RESISTORS ARE 1/10W UNLESS OTHERWISE NOTED
ALL CAPACITORS ARE 25V UNLESS OTHERWISE NOTED

1SS303
PIN LAYOUT

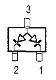

LOT NO.	BOARD NO.
312-412	1-648-543-13
501-603	1-648-543-14

TBC Sequence

TBC-23 BOARD (2/5)

BOARD NO. 1-648-543-13, 14
BOARD' S LOT NO. 312-603
DVW-A500 (J, UC) :TBC-23 MCB
DVW-A500P (EK) :TBC-23P MCB
DVW-A500P (UC) :TBC-23PG MCB
DVW-A510 (J, UC) :TBC-23 MCB
DVW-A510P (EK) :TBC-23P MCB
DVW-CA510(J, UC) :TBC-23 MCB
DVW-CA510P(EK) :TBC-23P MCB

DVW-TBC23-ALL-A-PB-S/M-04-B

I | J | K | L | M | N | O | P

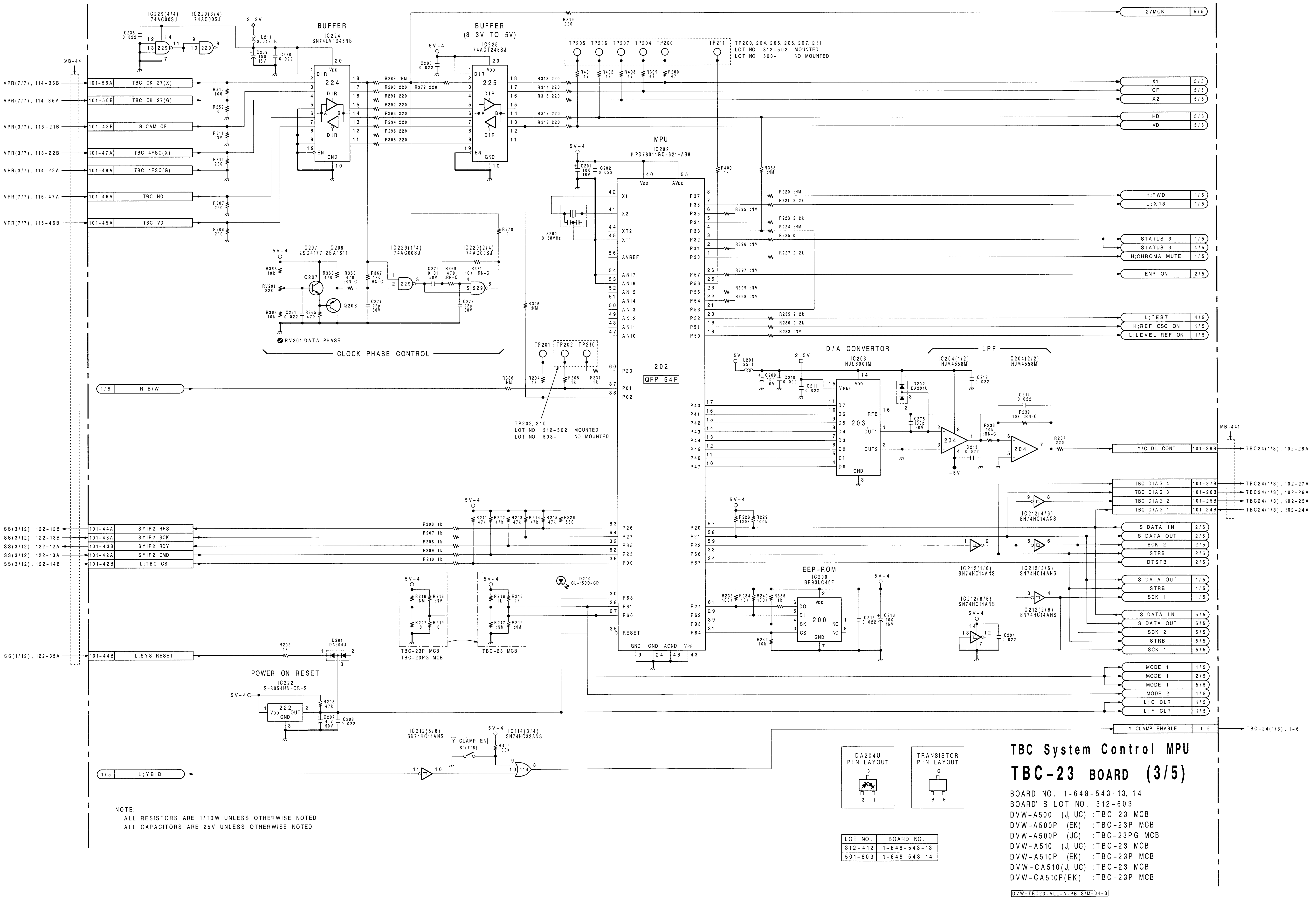
BUFFER
IC224
SN74LVT245NS
BUFFER
(3.3V TO 5V)
IC225
74ACT245SJ
MPU
IC202
μPD78014GC-621-AB8
202
QFP 64P
CLOCK PHASE CONTROL
RV201;DATA PHASE
D/A CONVERTOR
IC203
NJU8001M
LPF
IC204(1/2)
NJM4558M
IC204(2/2)
NJM4558M
EEP-ROM
IC200
BR93LC46F
POWER ON RESET
IC222
S-8054HN-CB-S
TP200, 204, 205, 206, 207, 211
LOT NO. 312-502; MOUNTED
LOT NO. 503- ; NO MOUNTED
TP202, 210
LOT NO. 312-502; MOUNTED
LOT NO. 503- ; NO MOUNTED
TBC-23P MCB
TBC-23PG MCB
TBC-23 MCB
27MCK
X1
CF
X2
HD
VD
H;FWD
L;X13
STATUS 3
H;CHROMA MUTE
ENR ON
L;TEST
H;REF OSC ON
L;LEVEL REF ON
Y/C DL CONT
TBC DIAG 4
TBC DIAG 3
TBC DIAG 2
TBC DIAG 1
S DATA IN
S DATA OUT
SCK 2
STRB
DTSTB
SCK 1
MODE 1
MODE 2
L;C CLR
L;Y CLR
Y CLAMP ENABLE
TBC CK 27(X)
TBC CK 27(G)
B-CAM CF
TBC 4FSC(X)
TBC 4FSC(G)
TBC HD
TBC VD
R B/W
SYIF2 RES
SYIF2 SCK
SYIF2 RDY
SYIF2 CMD
L;TBC CS
L;SYS RESET
L;YBID
Y CLAMP EN
NOTE;
ALL RESISTORS ARE 1/10W UNLESS OTHERWISE NOTED
ALL CAPACITORS ARE 25V UNLESS OTHERWISE NOTED
DA204U
PIN LAYOUT
TRANSISTOR
PIN LAYOUT
LOT NO. | BOARD NO.
312-412 | 1-648-543-13
501-603 | 1-648-543-14
TBC System Control MPU
TBC-23 BOARD (3/5)
BOARD NO. 1-648-543-13, 14
BOARD' S LOT NO. 312-603
DVW-A500 (J, UC) :TBC-23 MCB
DVW-A500P (EK) :TBC-23P MCB
DVW-A500P (UC) :TBC-23PG MCB
DVW-A510 (J, UC) :TBC-23 MCB
DVW-A510P (EK) :TBC-23P MCB
DVW-CA510(J, UC) :TBC-23 MCB
DVW-CA510P(EK) :TBC-23P MCB
DVW-TBC23-ALL-A-PB-S/M-04-B

TBC-23 (4/5)

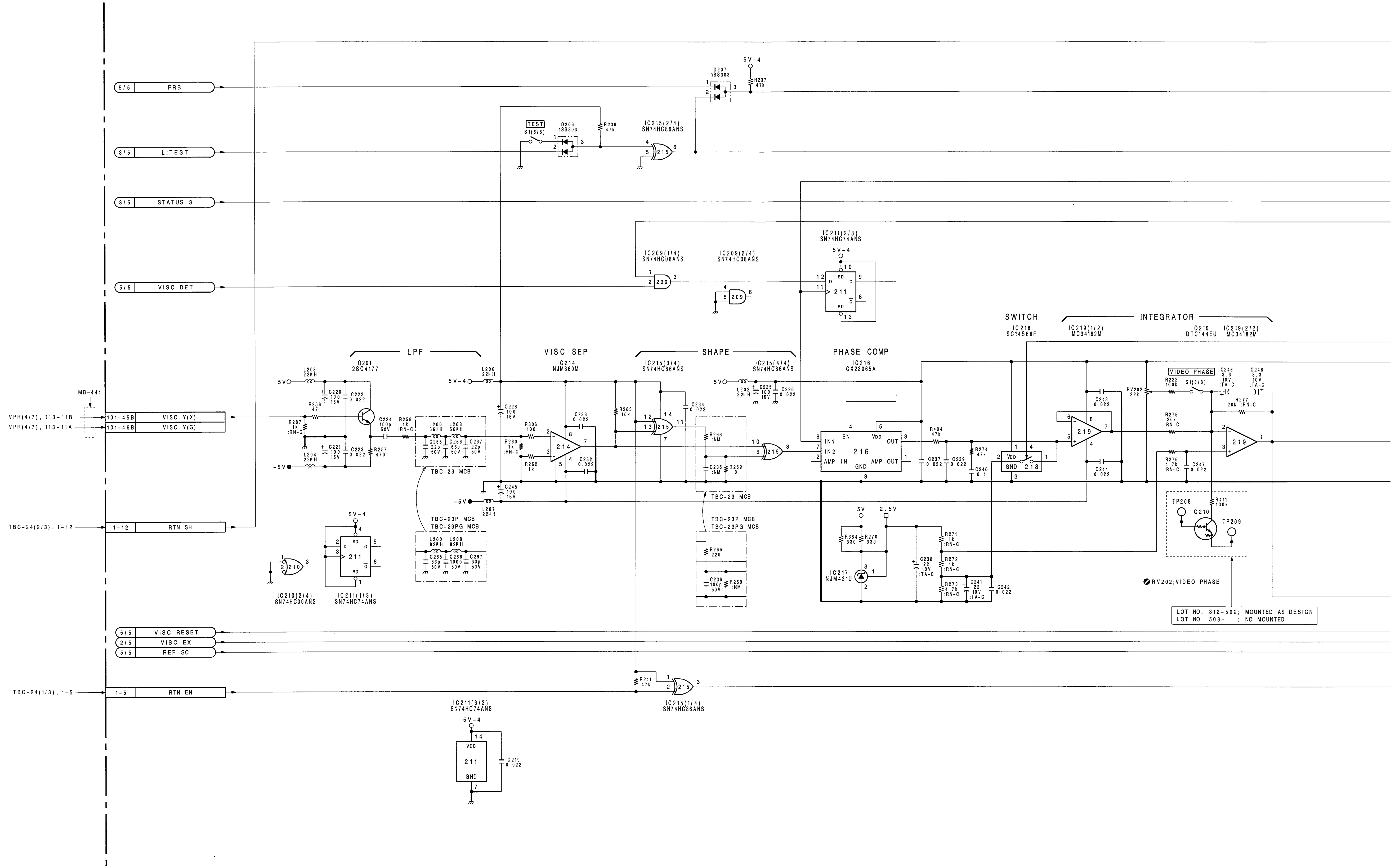

NOTE;
ALL RESISTORS ARE 1/10W UNLESS OTHERWISE NOTED.
ALL CAPACITORS ARE 25V UNLESS OTHERWISE NOTED.

1-112 (b)

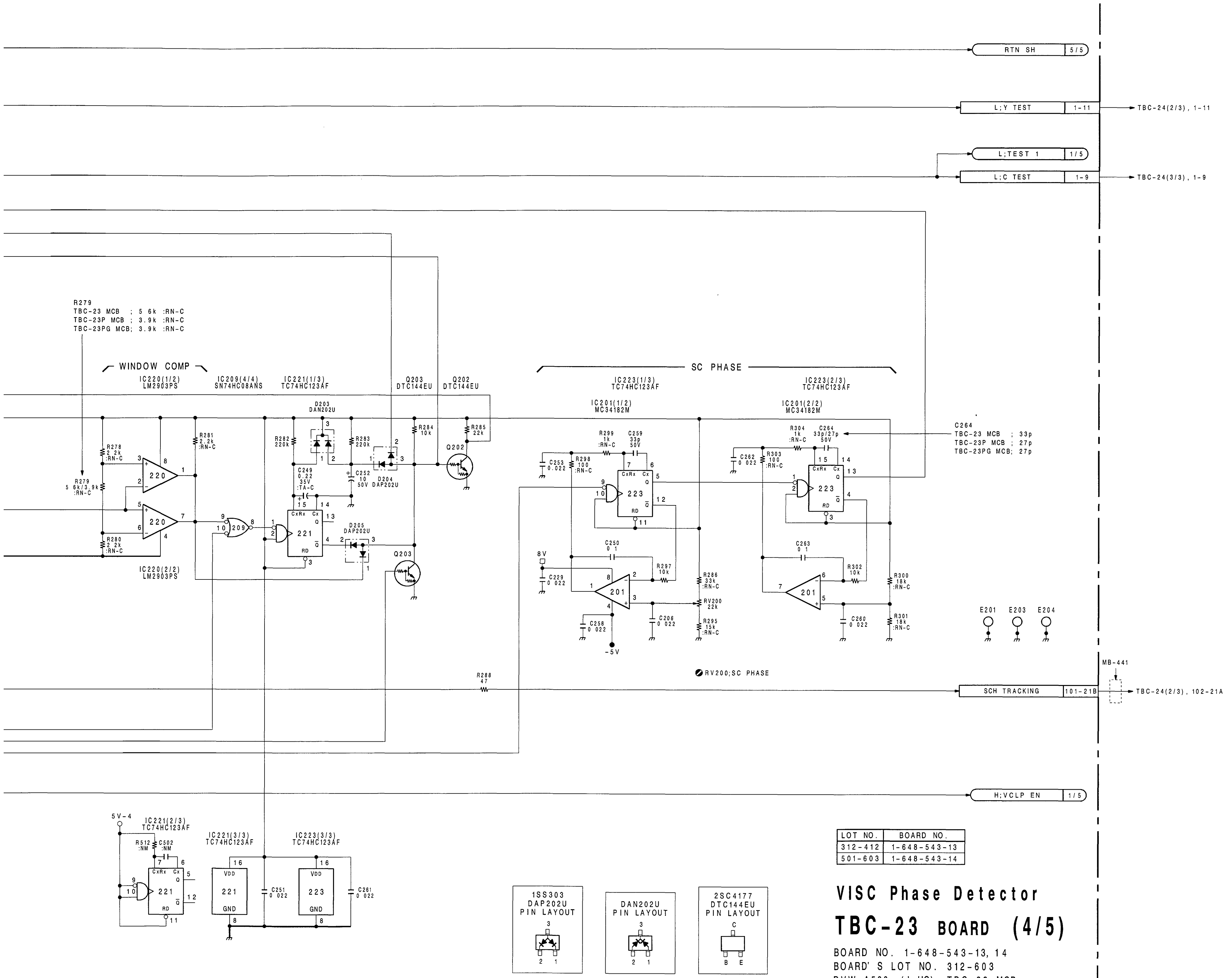

LOT NO.	BOARD NO.
312-412	1-648-543-13
501-603	1-648-543-14

VISC Phase Detector

TBC-23 BOARD (4/5)

BOARD NO. 1-648-543-13, 14
BOARD' S LOT NO. 312-603
DVW-A500 (J, UC) :TBC-23 MCB
DVW-A500P (EK) :TBC-23P MCB
DVW-A500P (UC) :TBC-23PG MCB
DVW-A510 (J, UC) :TBC-23 MCB
DVW-A510P (EK) :TBC-23P MCB
DVW-CA510(J, UC) :TBC-23 MCB
DVW-CA510P(EK) :TBC-23P MCB

DVW-TBC23-ALL-A-PB-S/M-04-B

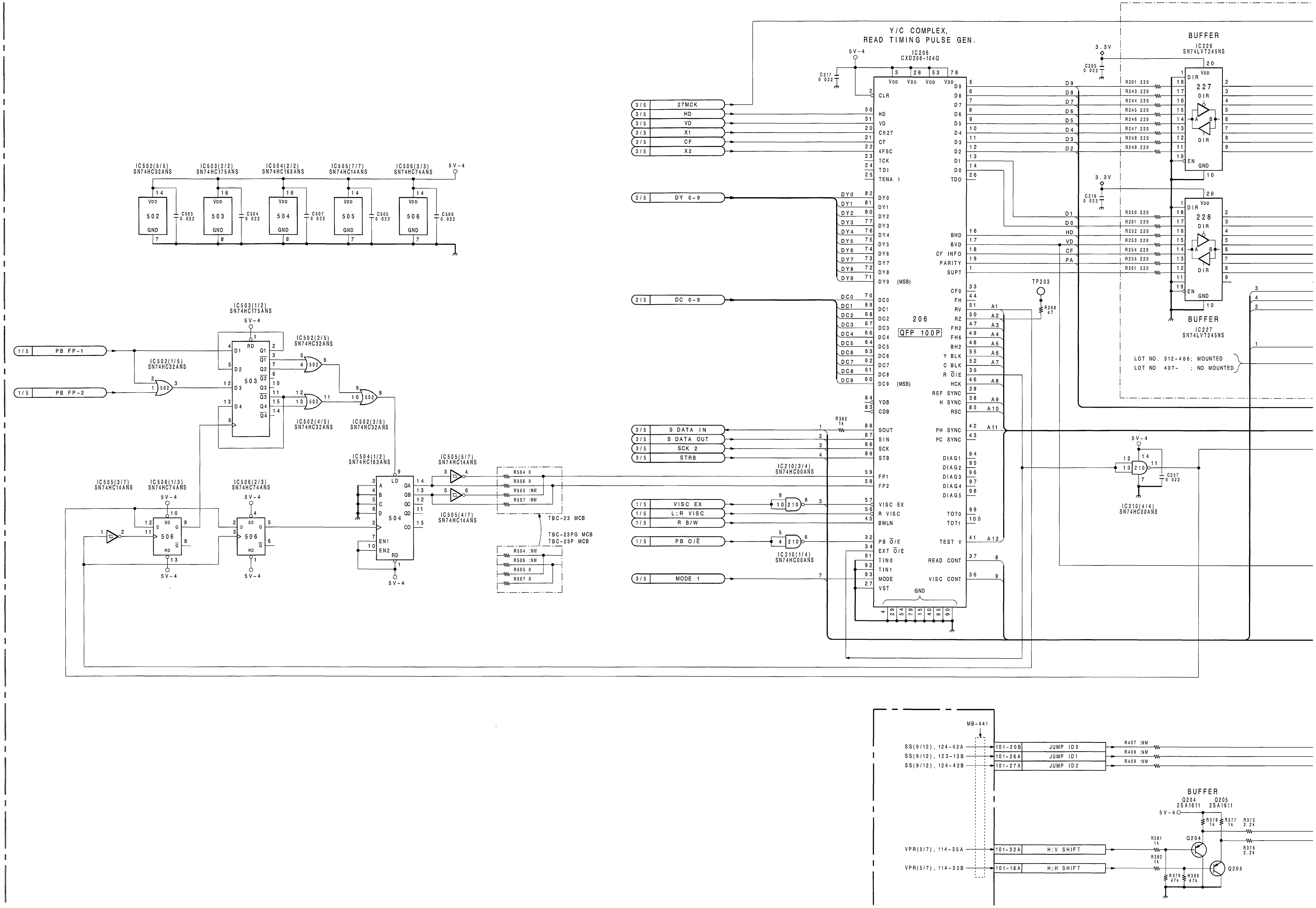
Y/C COMPLEX,
READ TIMING PULSE GEN.
IC206
CXD206-104Q
206
QFP 100P
BUFFER
IC226
SN74LVT245NS
227
228
BUFFER
IC227
SN74LVT245NS
LOT NO. 312-406; MOUNTED
LOT NO 407- ; NO MOUNTED
IC502(5/5) SN74HC32ANS
IC503(2/2) SN74HC175ANS
IC504(2/2) SN74HC163ANS
IC505(7/7) SN74HC14ANS
IC506(3/3) SN74HC74ANS
IC503(1/2) SN74HC175ANS
IC502(2/5) SN74HC32ANS
IC502(1/5) SN74HC32ANS
IC502(4/5) SN74HC32ANS
IC502(3/5) SN74HC32ANS
IC504(1/2) SN74HC163ANS
IC505(5/7) SN74HC14ANS
IC505(4/7) SN74HC14ANS
IC505(3/7) SN74HC14ANS
IC506(1/3) SN74HC74ANS
IC506(2/3) SN74HC74ANS
IC210(3/4) SN74HC00ANS
IC210(1/4) SN74HC00ANS
IC210(4/4) SN74HC00ANS
PB FP-1
PB FP-2
27MCK
HD
VD
X1
CF
X2
DY 0-9
DC 0-9
S DATA IN
S DATA OUT
SCK 2
STRB
VISC EX
L;R VISC
R B/W
PB O/E
MODE 1
TBC-23 MCB
TBC-23PG MCB
TBC-23P MCB
TP203
MB-441
SS(9/12), 124-42A
SS(9/12), 123-13B
SS(9/12), 124-42B
JUMP ID0
JUMP ID1
JUMP ID2
BUFFER
Q204 2SA1611
Q205 2SA1611
VPR(5/7), 114-35A
VPR(5/7), 114-35B
H;V SHIFT
H;H SHIFT

http://getMANUAL.com

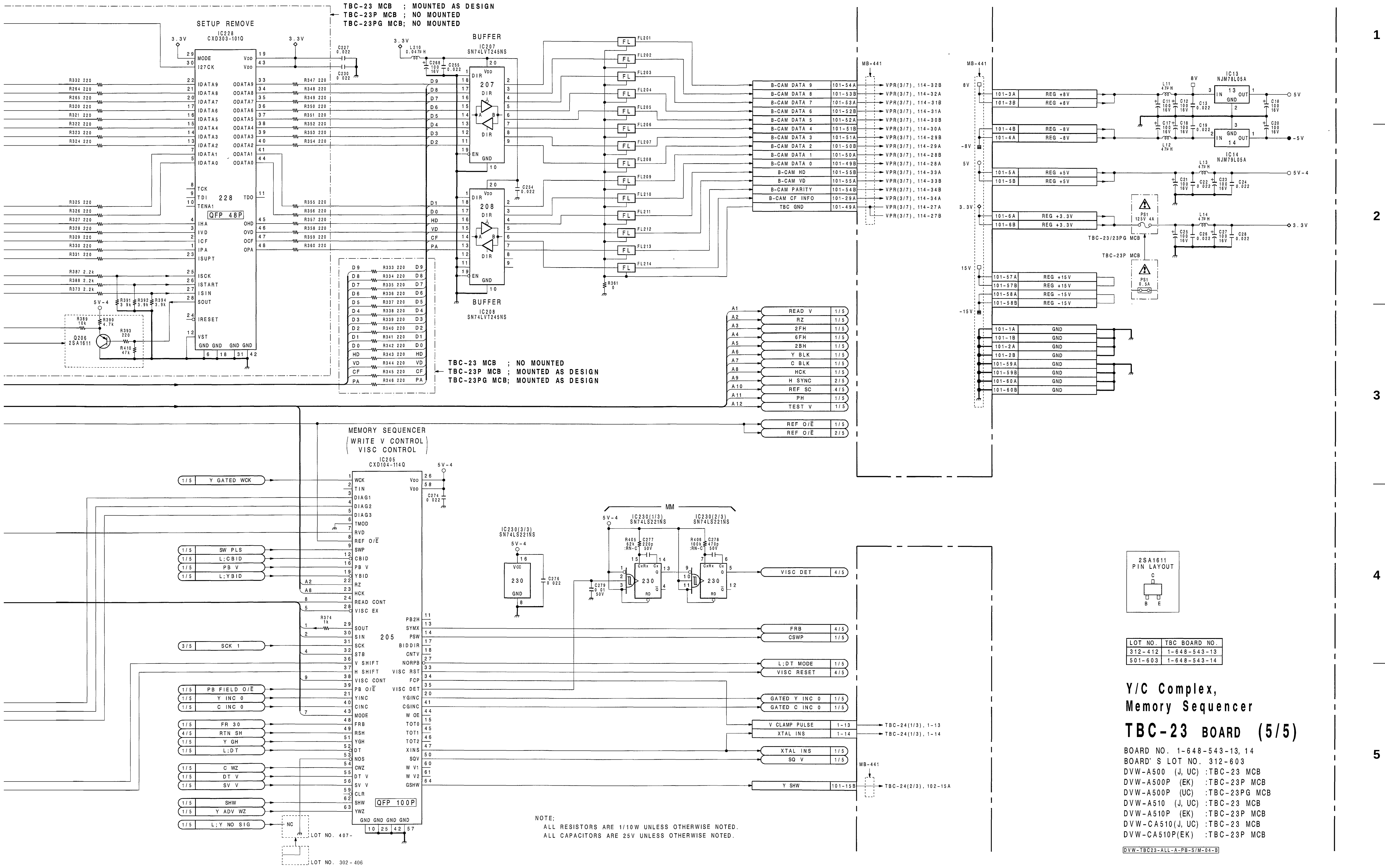

 TBC-23 (1/5)

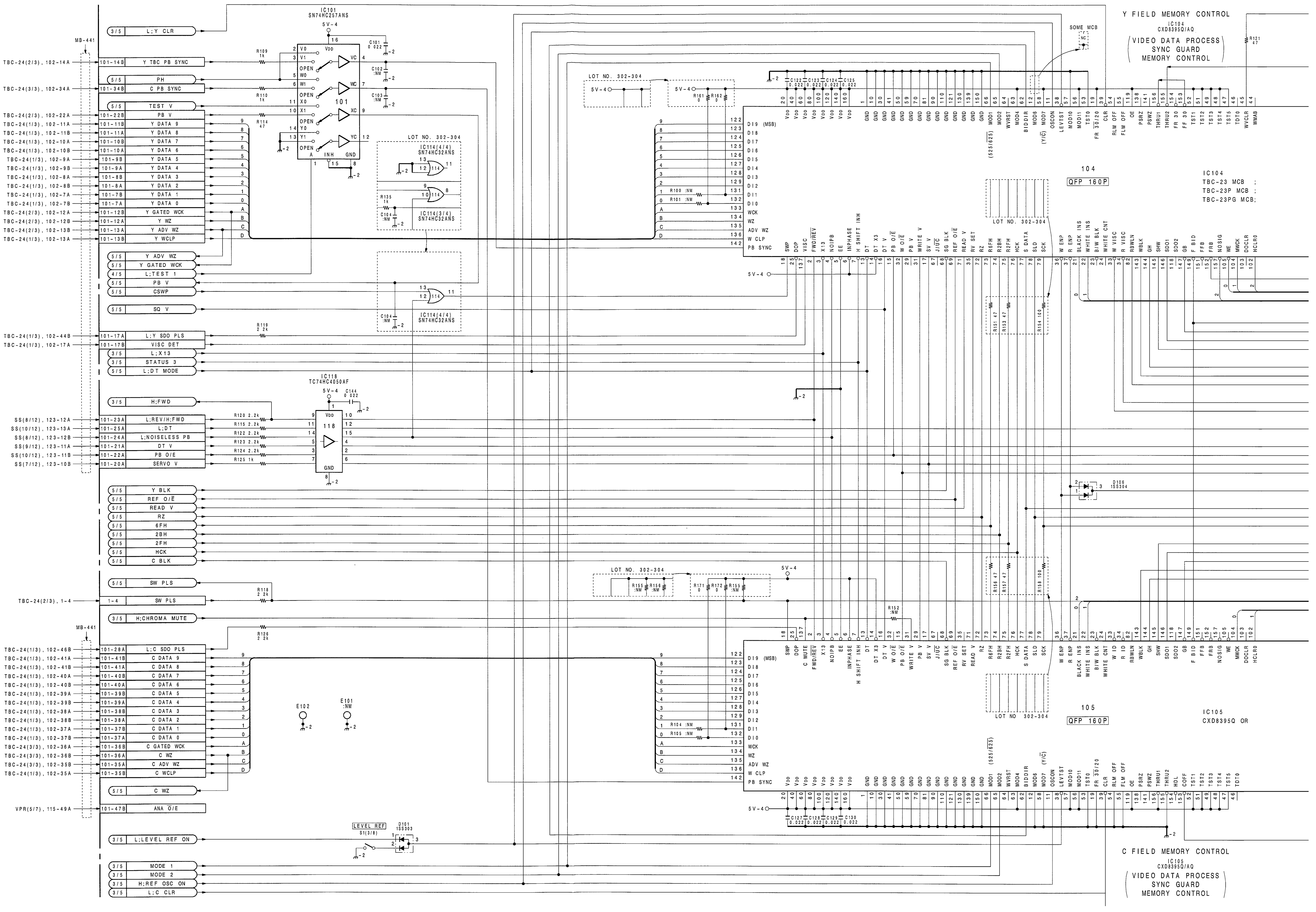

 1-106 (a)

 TBC-23 (1/5)

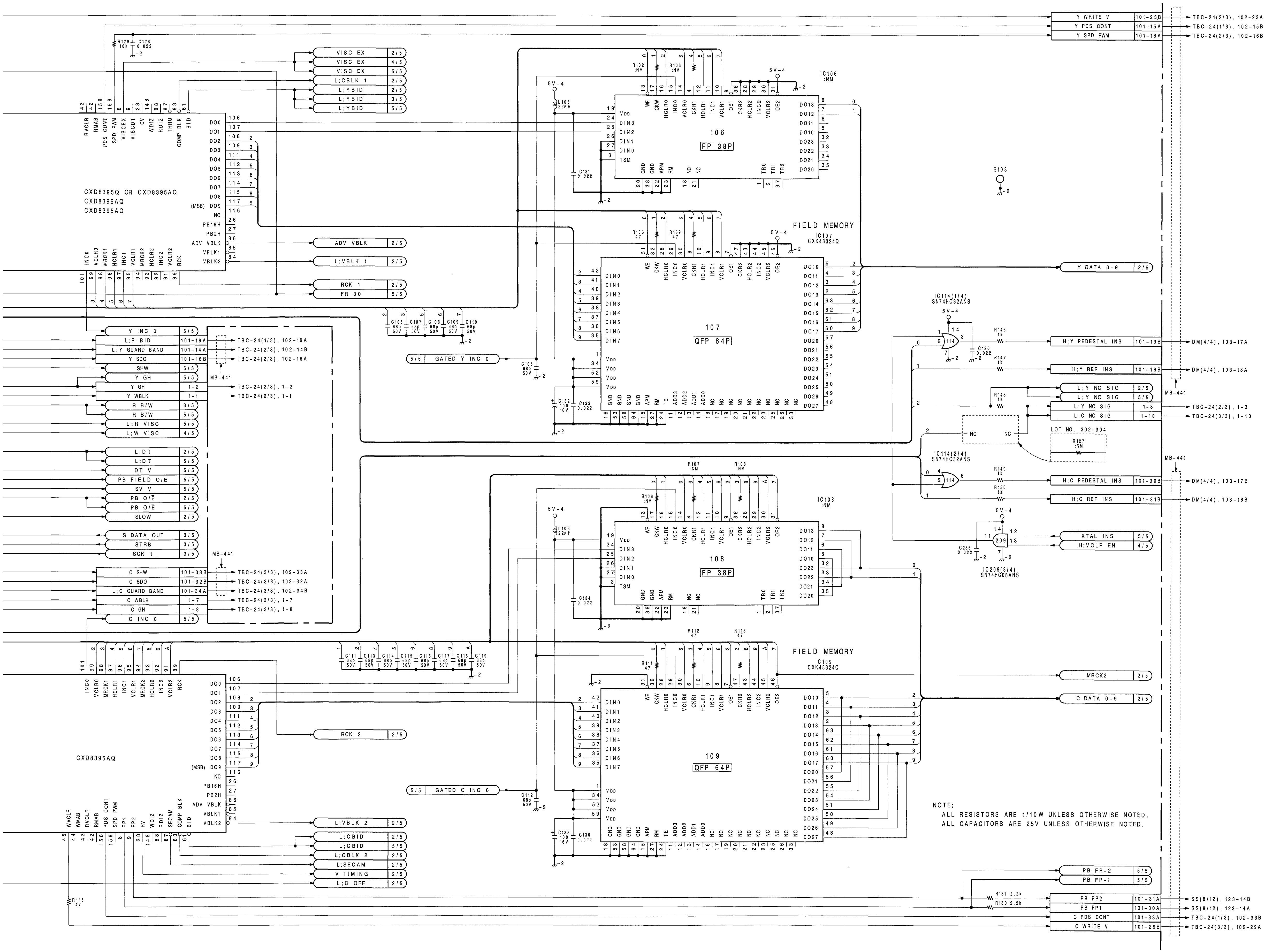

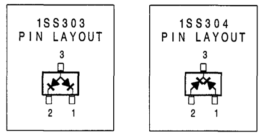

1
2
3
4
5

LOT NO.	BOARD NO.
302-304	1-648-543-11
305-311	1-648-543-12

Y/C Data Memory Control, Field Memory

TBC-23 BOARD (1/5)

BOARD NO. 1-648-543-11, 12
BOARD' S LOT NO. 302-311
DVW-A500 (J, UC) :TBC-23 MCB
DVW-A500P (EK) :TBC-23P MCB
DVW-A500P (UC) :TBC-23PG MCB
DVW-A510 (J, UC) :TBC-23 MCB
DVW-A510P (EK) :TBC-23P MCB
DVW-CA510 (UC) :TBC-23 MCB
DVW-CA510P(EK) :TBC-23P MCB

DVW-TBC23-ALL-A-PB-S/M-04-A

 1-107 (a)

I J K L M N O P

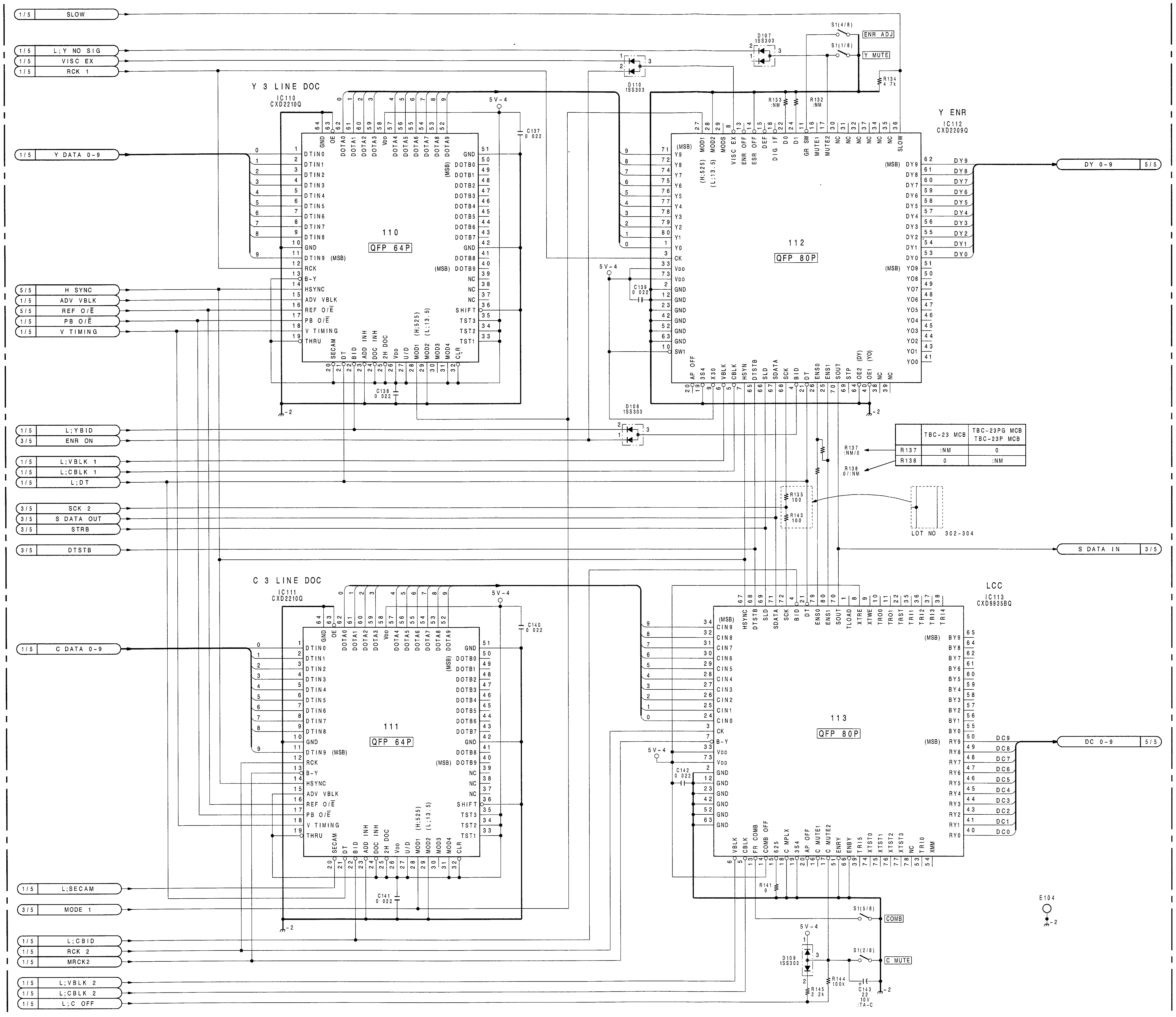

	TBC-23 MCB	TBC-23PG MCB TBC-23P MCB
R137	:NM	0
R138	0	:NM

NOTE;
ALL RESISTORS ARE 1/10W UNLESS OTHERWISE NOTED.
ALL CAPACITORS ARE 25V UNLESS OTHERWISE NOTED.

1SS303 PIN LAYOUT

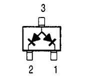

LOT NO.	BOARD NO.
302-304	1-648-543-11
305-311	1-648-543-12

TBC Sequence

TBC-23 BOARD (2/5)

BOARD NO. 1-648-543-11, 12
BOARD'S LOT NO. 302-311
DVW-A500 (J, UC) :TBC-23 MCB
DVW-A500P (EK) :TBC-23P MCB
DVW-A500P (UC) :TBC-23PG MCB
DVW-A510 (J, UC) :TBC-23 MCB
DVW-A510P (EK) :TBC-23P MCB
DVW-CA510 (UC) :TBC-23 MCB
DVW-CA510P(EK) :TBC-23P MCB

DVW-TBC23-ALL-A-PB-S/M-04-A

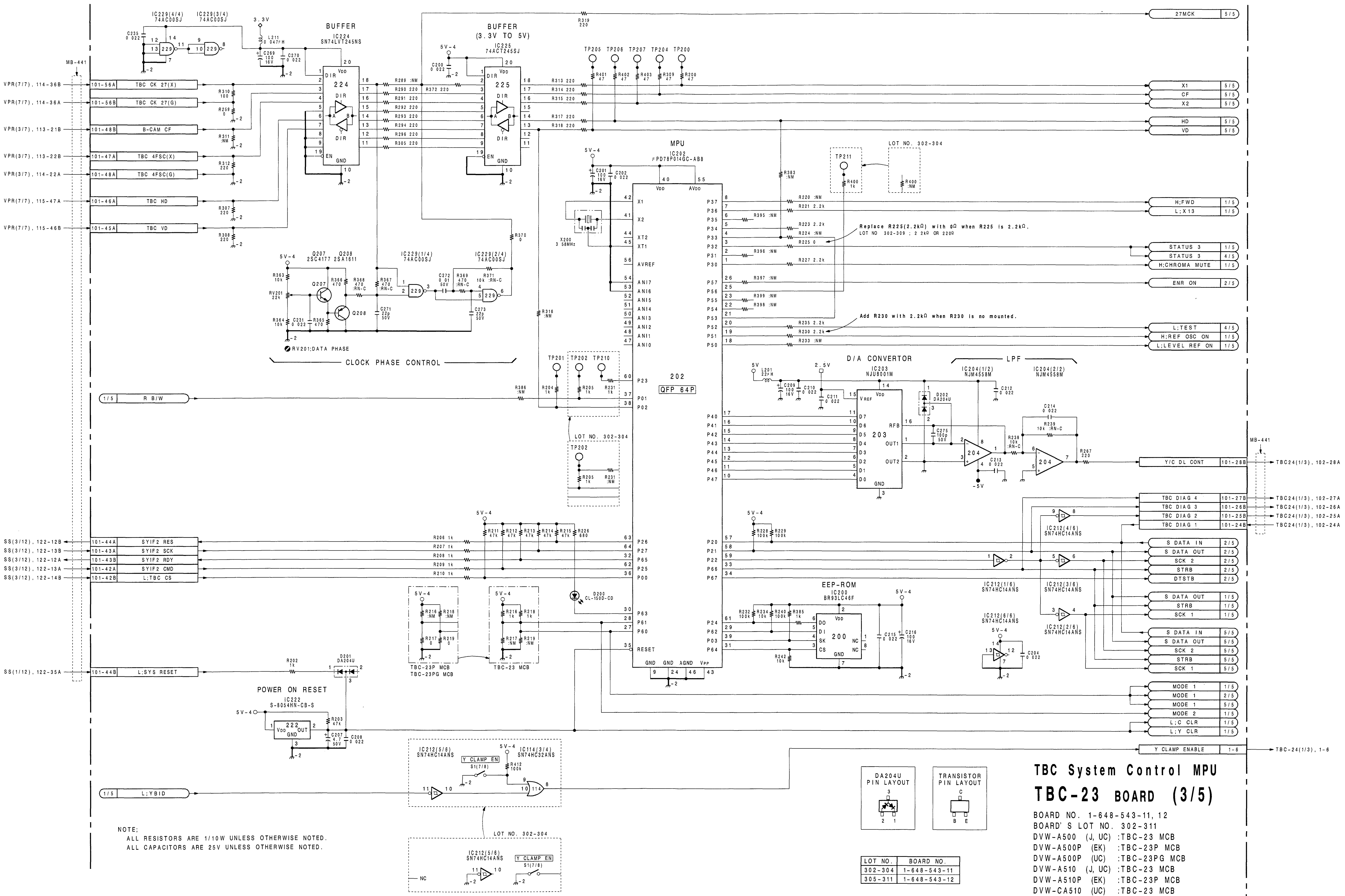

NOTE;
ALL RESISTORS ARE 1/10W UNLESS OTHERWISE NOTED.
ALL CAPACITORS ARE 25V UNLESS OTHERWISE NOTED.

LOT NO.	BOARD NO.
302-304	1-648-543-11
305-311	1-648-543-12

TBC System Control MPU

TBC-23 BOARD (3/5)

BOARD NO. 1-648-543-11, 12
BOARD' S LOT NO. 302-311
DVW-A500 (J, UC) :TBC-23 MCB
DVW-A500P (EK) :TBC-23P MCB
DVW-A500P (UC) :TBC-23PG MCB
DVW-A510 (J, UC) :TBC-23 MCB
DVW-A510P (EK) :TBC-23P MCB
DVW-CA510 (UC) :TBC-23 MCB
DVW-CA510P(EK) :TBC-23P MCB

DVW-TBC23-ALL-A-PB-S/M-04-A

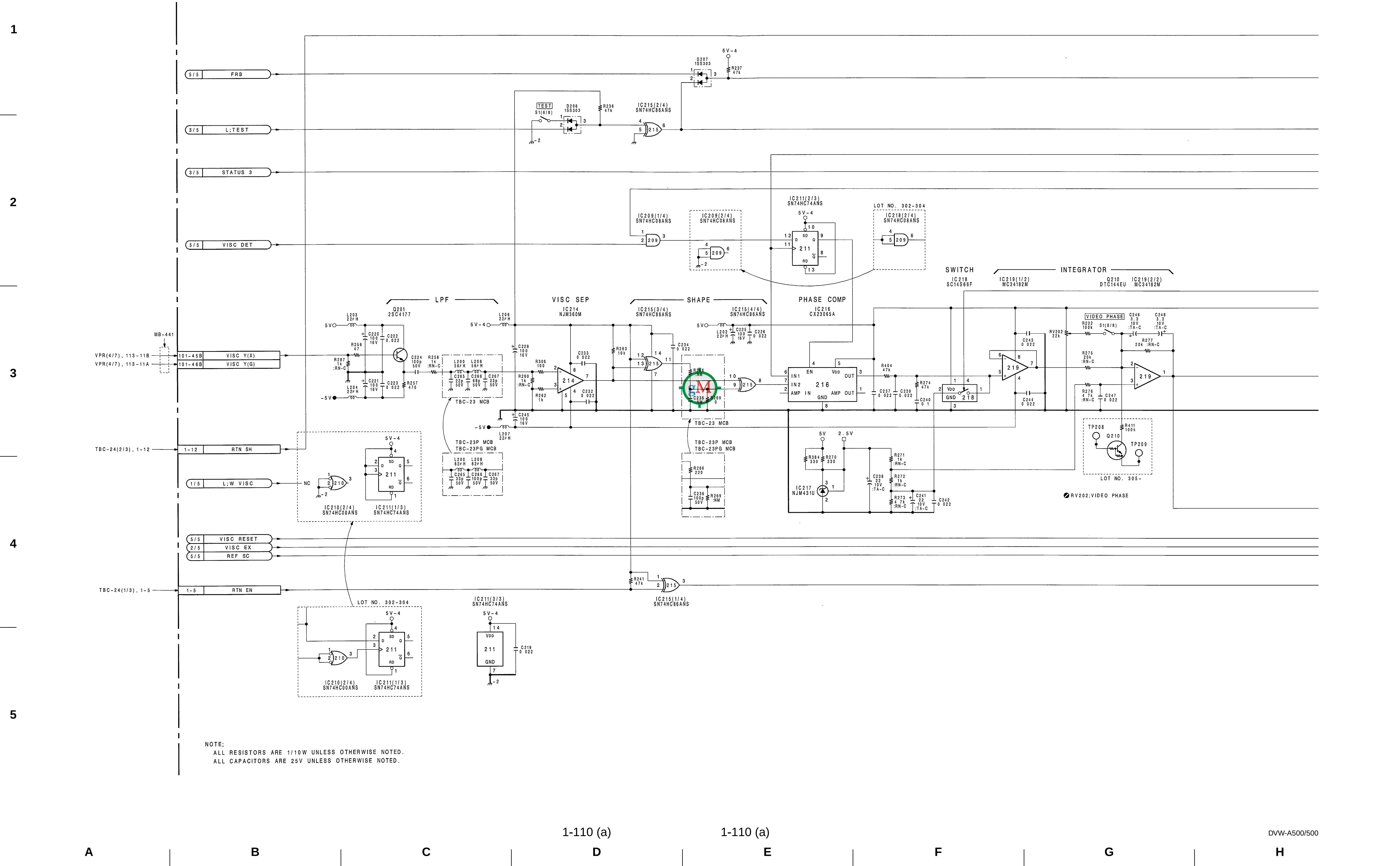
LPF
VISC SEP
SHAPE
PHASE COMP
SWITCH
INTEGRATOR
NOTE;
ALL RESISTORS ARE 1/10W UNLESS OTHERWISE NOTED.
ALL CAPACITORS ARE 25V UNLESS OTHERWISE NOTED.

 TBC-23 (4/5)

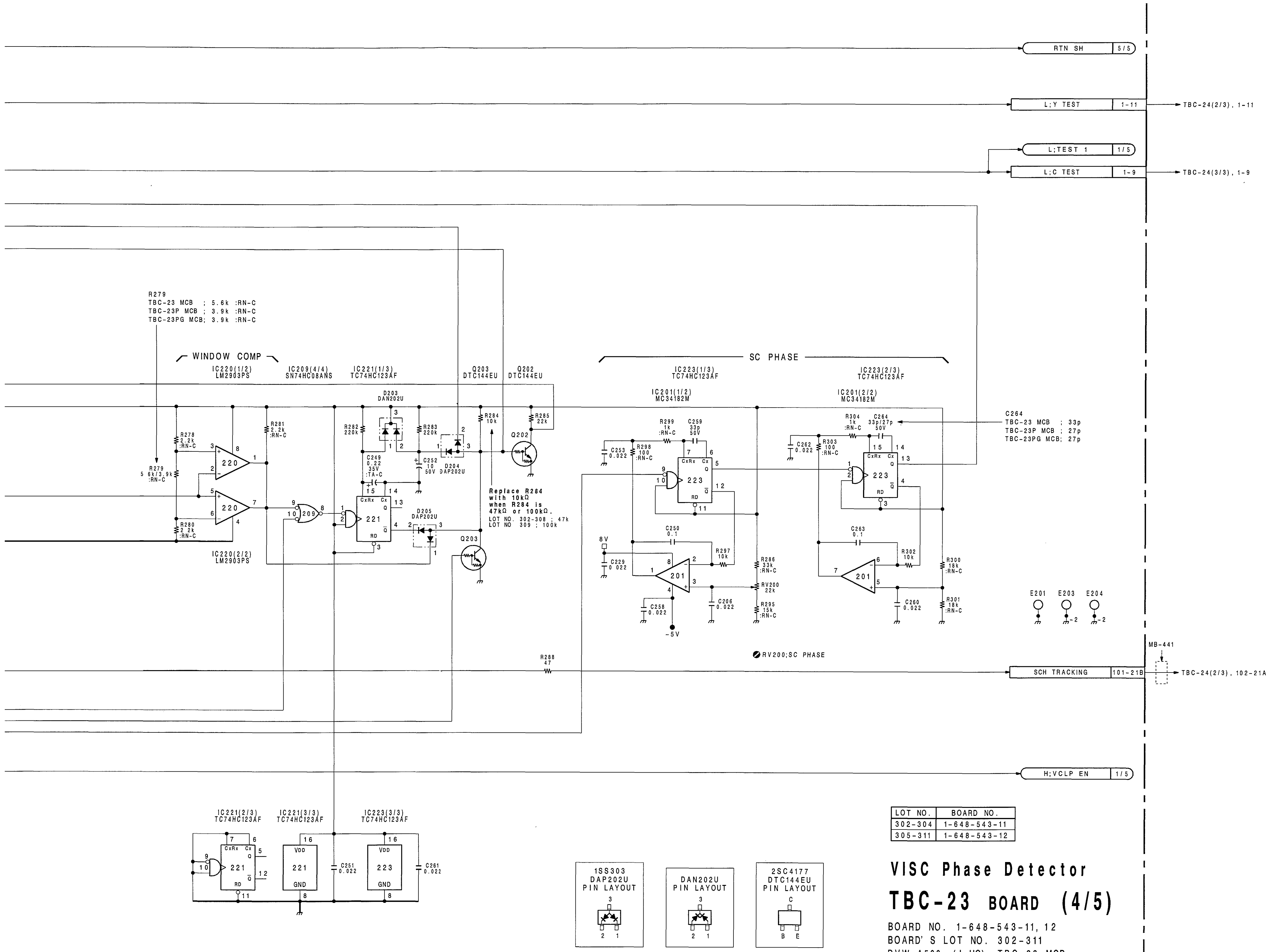

LOT NO.	BOARD NO.
302-304	1-648-543-11
305-311	1-648-543-12

VISC Phase Detector

TBC-23 BOARD (4/5)

BOARD NO. 1-648-543-11, 12
BOARD' S LOT NO. 302-311
DVW-A500 (J, UC) :TBC-23 MCB
DVW-A500P (EK) :TBC-23P MCB
DVW-A500P (UC) :TBC-23PG MCB
DVW-A510 (J, UC) :TBC-23 MCB
DVW-A510P (EK) :TBC-23P MCB
DVW-CA510 (UC) :TBC-23 MCB
DVW-CA510P(EK) :TBC-23P MCB

DVW-TBC23-ALL-A-PB-S/M-04-A

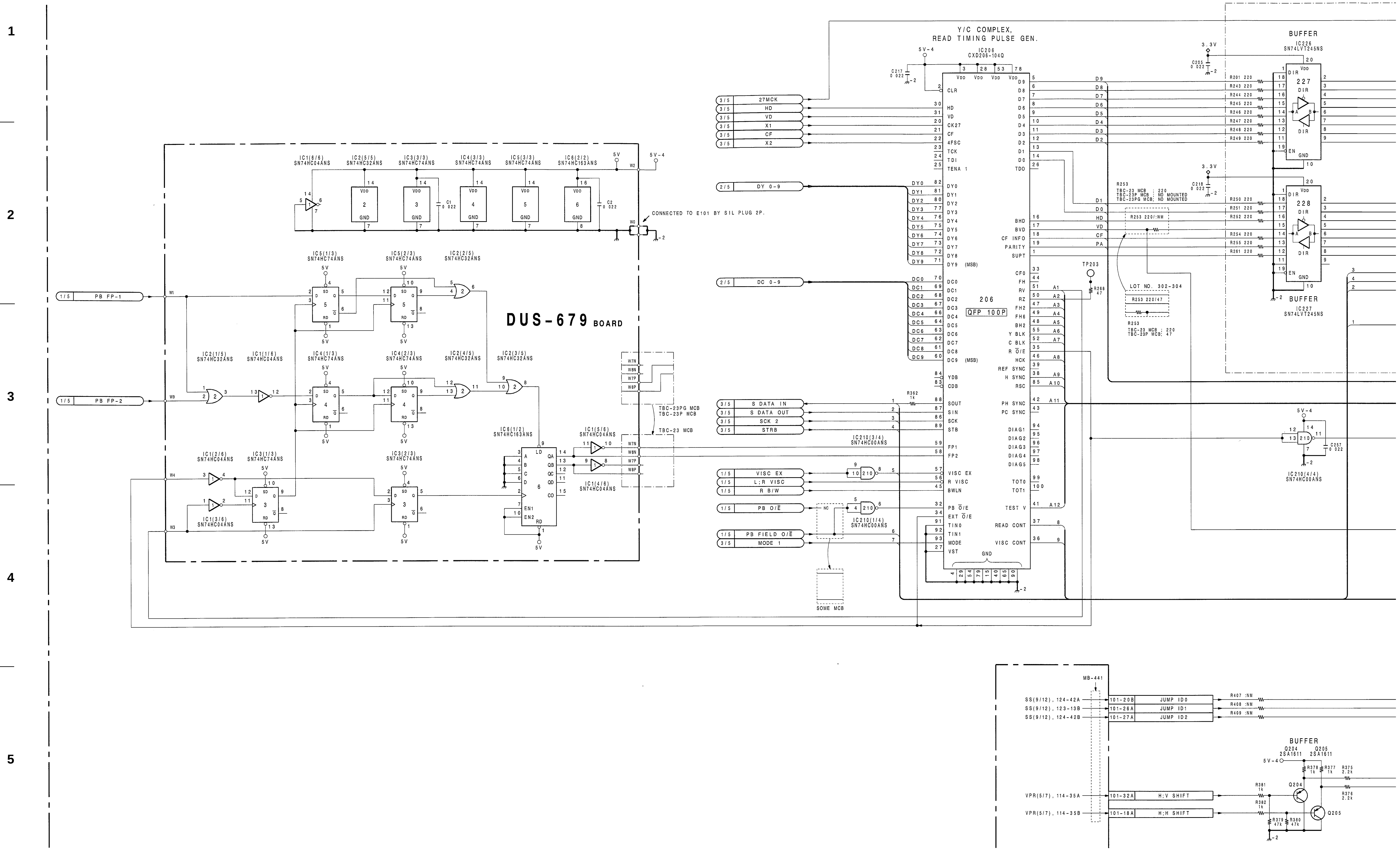

DUS-679 BOARD
Y/C COMPLEX, READ TIMING PULSE GEN.
IC208 CXD206-104Q
206 QFP 100P
BUFFER IC226 SN74LVT245NS
BUFFER IC227 SN74LVT245NS
CONNECTED TO E101 BY SIL PLUG 2P.
PB FP-1
PB FP-2
27MCK
HD
VD
X1
CF
X2
DY 0-9
DC 0-9
S DATA IN
S DATA OUT
SCK 2
STRB
VISC EX
L;R VISC
R B/W
PB O/E
PB FIELD O/E
MODE 1
TBC-23PG MCB
TBC-23P MCB
TBC-23 MCB
SOME MCB
LOT NO. 302-304
MB-441
JUMP ID0
JUMP ID1
JUMP ID2
H;V SHIFT
H;H SHIFT
BUFFER
Q204 2SA1611
Q205 2SA1611

A B C D E F G H

 TBC-23 (5/5)

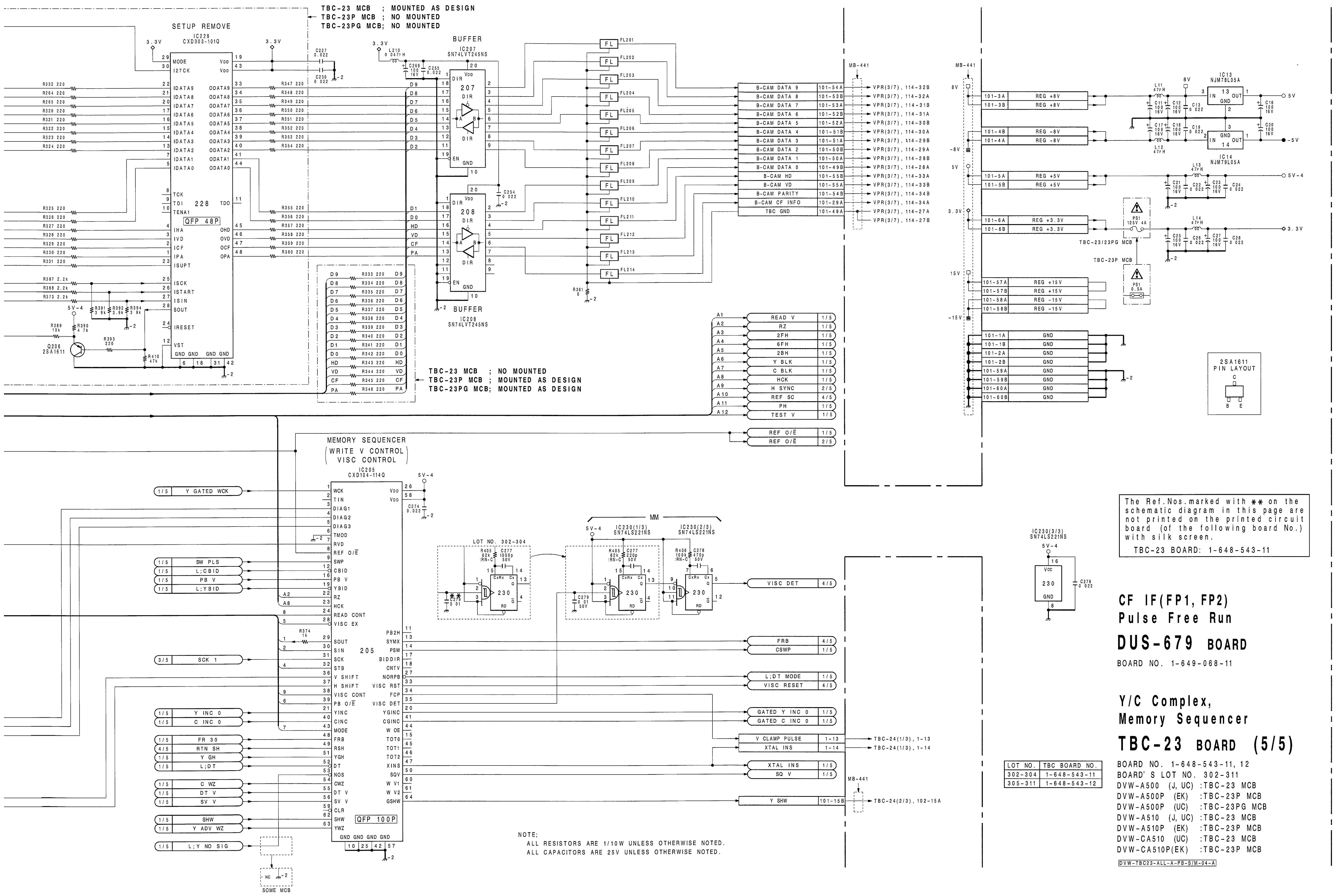

The Ref.Nos.marked with ✱✱ on the schematic diagram in this page are not printed on the printed circuit board (of the following board No.) with silk screen.

TBC-23 BOARD: 1-648-543-11

CF IF(FP1, FP2)
Pulse Free Run

DUS-679 BOARD

BOARD NO. 1-649-068-11

Y/C Complex,
Memory Sequencer

TBC-23 BOARD (5/5)

BOARD NO. 1-648-543-11, 12
BOARD'S LOT NO. 302-311

LOT NO.	TBC BOARD NO.
302-304	1-648-543-11
305-311	1-648-543-12

DVW-A500 (J, UC) :TBC-23 MCB
DVW-A500P (EK) :TBC-23P MCB
DVW-A500P (UC) :TBC-23PG MCB
DVW-A510 (J, UC) :TBC-23 MCB
DVW-A510P (EK) :TBC-23P MCB
DVW-CA510 (UC) :TBC-23 MCB
DVW-CA510P(EK) :TBC-23P MCB

DVW-TBC23-ALL-A-PB-S/M-04-A

 1-113 (a)

AP-28 Board -A Side-

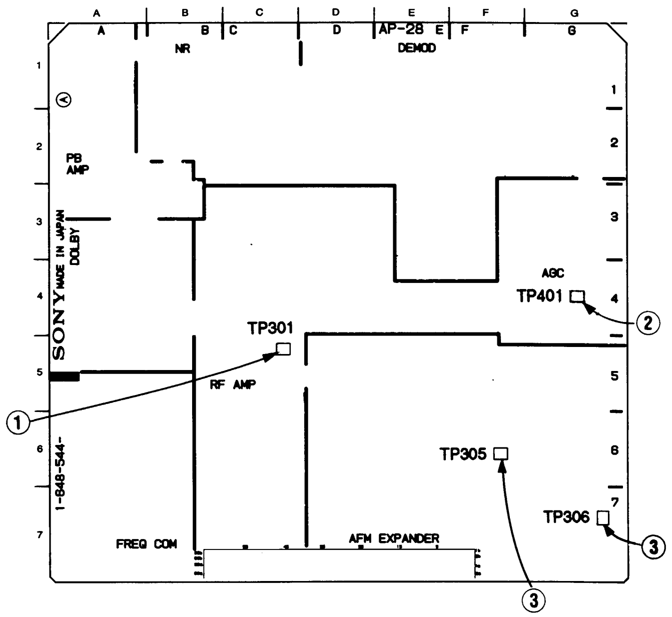

①TP301(C-5) PB mode
TP305(G-7) PB mode(TRIG)

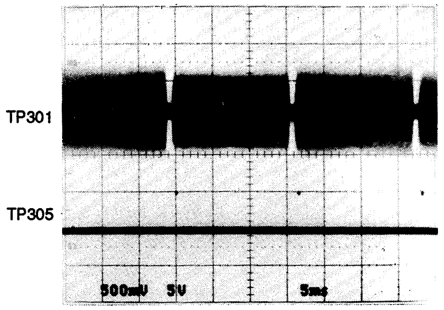

②TP401(G-4) PB mode
TP306(G-7)(TRIG)

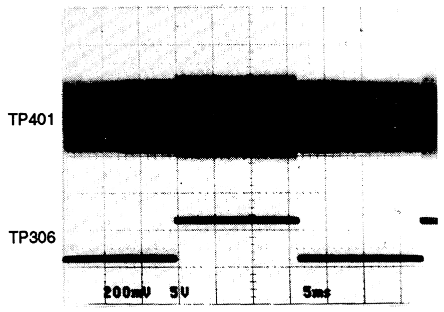

③TP305(F-6) PB mode
TP306(G-7)(TRIG)

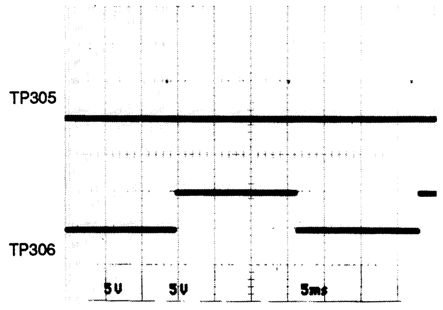

Measurement Condition
MODE : PB mode
TAPE : CR5-1B

For DVW-A500/A510/CA510

①TP301(C-5) PB mode
TP305(G-7) PB mode(TRIG)

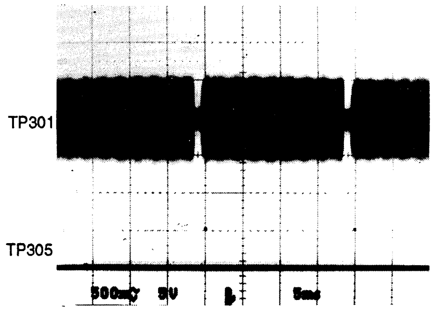

②TP401(G-4) PB mode
TP306(G-7)(TRIG)

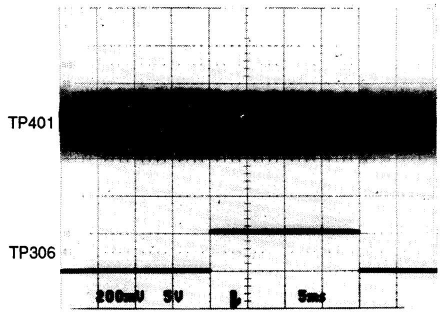

③TP305(F-6) PB mode
TP306(G-7)(TRIG)

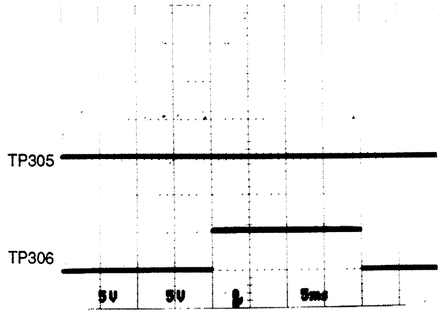

Measurement Condition
MODE : PB mode
TAPE : CR5-1BPS

For DVW-A500P/A510P/CA510P

http://getMANUAL.com

 AP-28 (1/3)

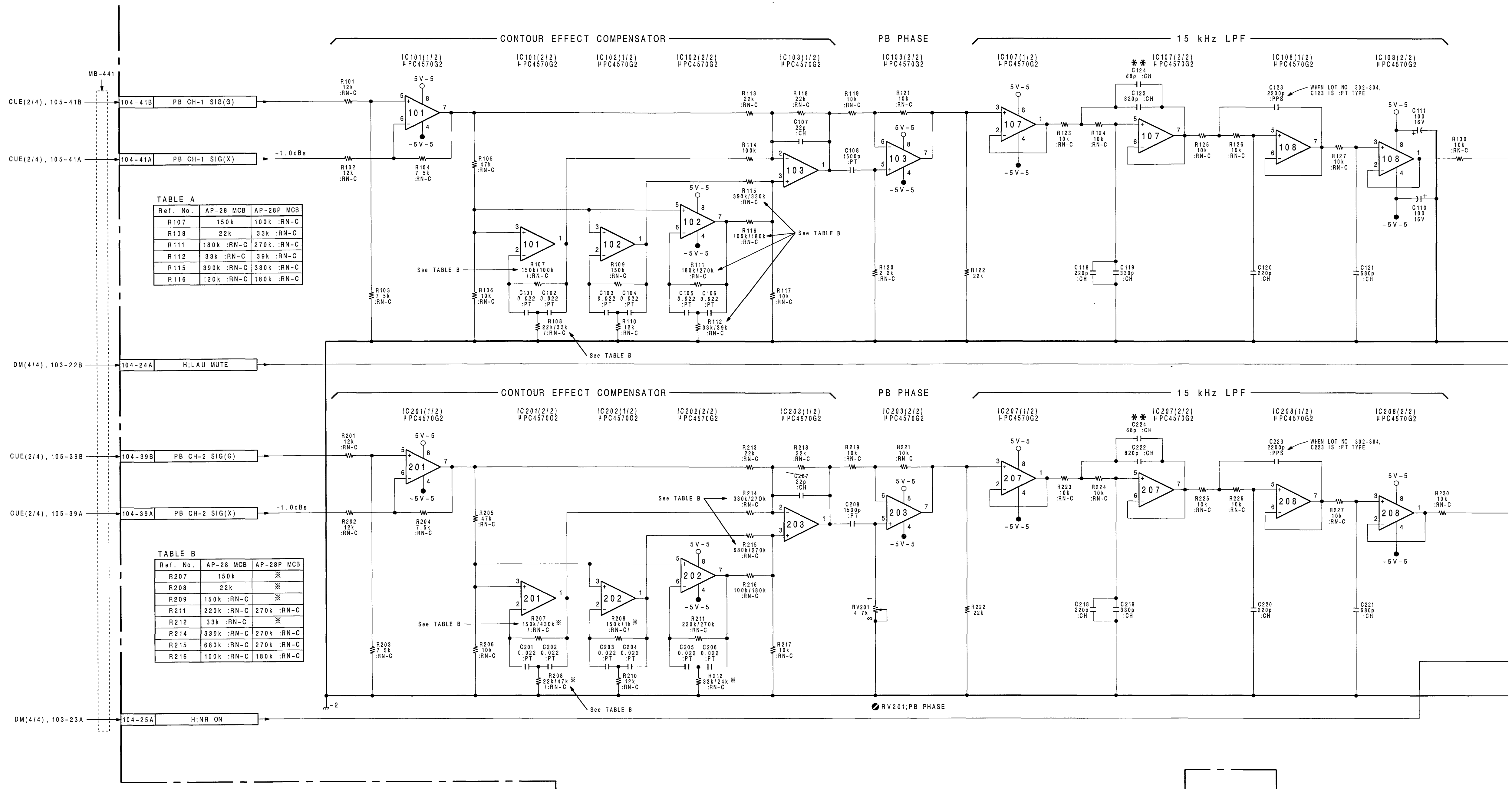

TABLE A

Ref. No.	AP-28 MCB	AP-28P MCB
R107	150k	100k :RN-C
R108	22k	33k :RN-C
R111	180k :RN-C	270k :RN-C
R112	33k :RN-C	39k :RN-C
R115	390k :RN-C	330k :RN-C
R116	120k :RN-C	180k :RN-C

TABLE B

Ref. No.	AP-28 MCB	AP-28P MCB
R207	150k	※
R208	22k	※
R209	150k :RN-C	※
R211	220k :RN-C	270k :RN-C
R212	33k :RN-C	※
R214	330k :RN-C	270k :RN-C
R215	680k :RN-C	270k :RN-C
R216	100k :RN-C	180k :RN-C

※PART CHANGE INFORMATION

旧部品に対する補修部品　同時に交換する部品

	Part change information			Change	Repair part	Simulataneously
	Ref. No.	Old	New	LOT No.	for Old part	change part
D-3	R207	330k :RN-C	→ 430k :RN-C	311	430k :RN-C	R208, R209, R212
D-4	R208	22k	→ 47k :RN-C	311	47k :RN-C	R207, R209, R212
D-3	R209	150k :RN-C	→ 1k	311	1k	R207, R208, R212
E-4	R212	22k :RN-C	→ 24k :RN-C	311	24k :RN-C	R207, R208, R209
K-1	R133	4 7k :RN-C	→ 0	311	0	R135, R137
L-2	R135	10k :RN-C	→ 4.7k :RN-C	311	4 7k :RN-C	R133, R137
L-2	R137	3.3k :RN-C	→ 4 7k :RN-C	311	4.7k :RN-C	R133, R135
K-3	R233	4 7k :RN-C	→ 0	311	0	R235, R237
L-3	R235	10k :RN-C	→ 4 7k :RN-C	311	4.7k :RN-C	R233, R237
L-4	R237	3.3k :RN-C	→ 4.7k :RN-C	311	4.7k :RN-C	R233, R235

FOR AP-28P ONLY (D-3 R207, D-4 R208, D-3 R209, E-4 R212)

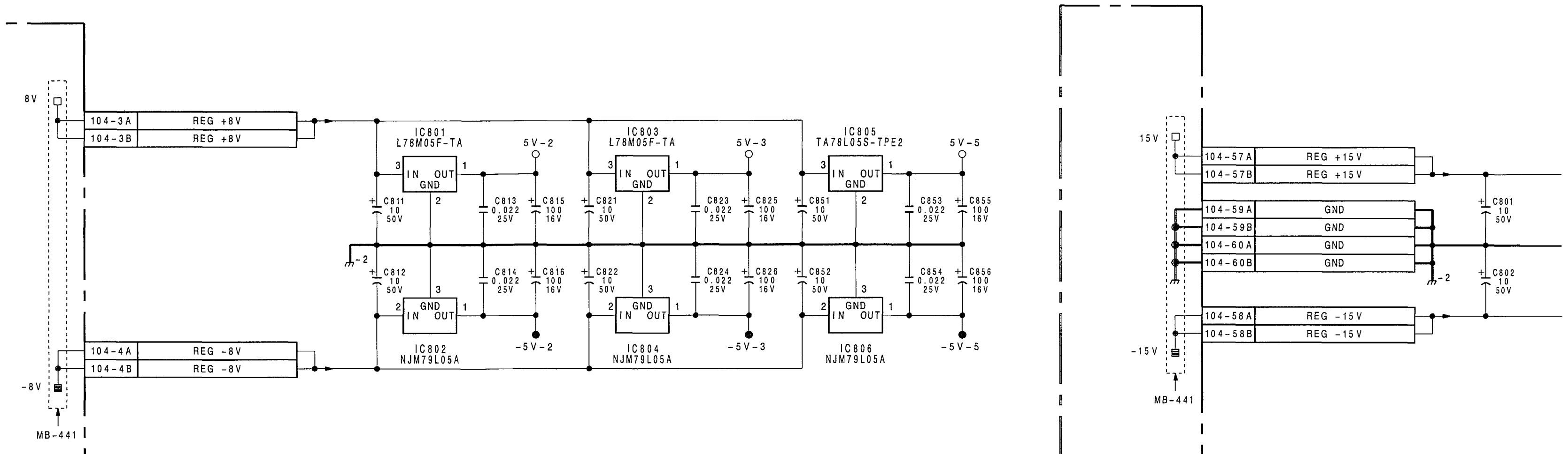

NOTE;
ALL RESISTORS ARE 1/10W UNLESS OTHERWISE NOTED.
ALL CAPACITORS ARE 50V UNLESS OTHERWISE NOTED.

 1-118

The Ref.Nos.marked with ※※ on the schematic diagram in this page are not printed on the printed circuit board (of the following board No.) with silk screen.
AP-28 BOARD: 1-648-544-11

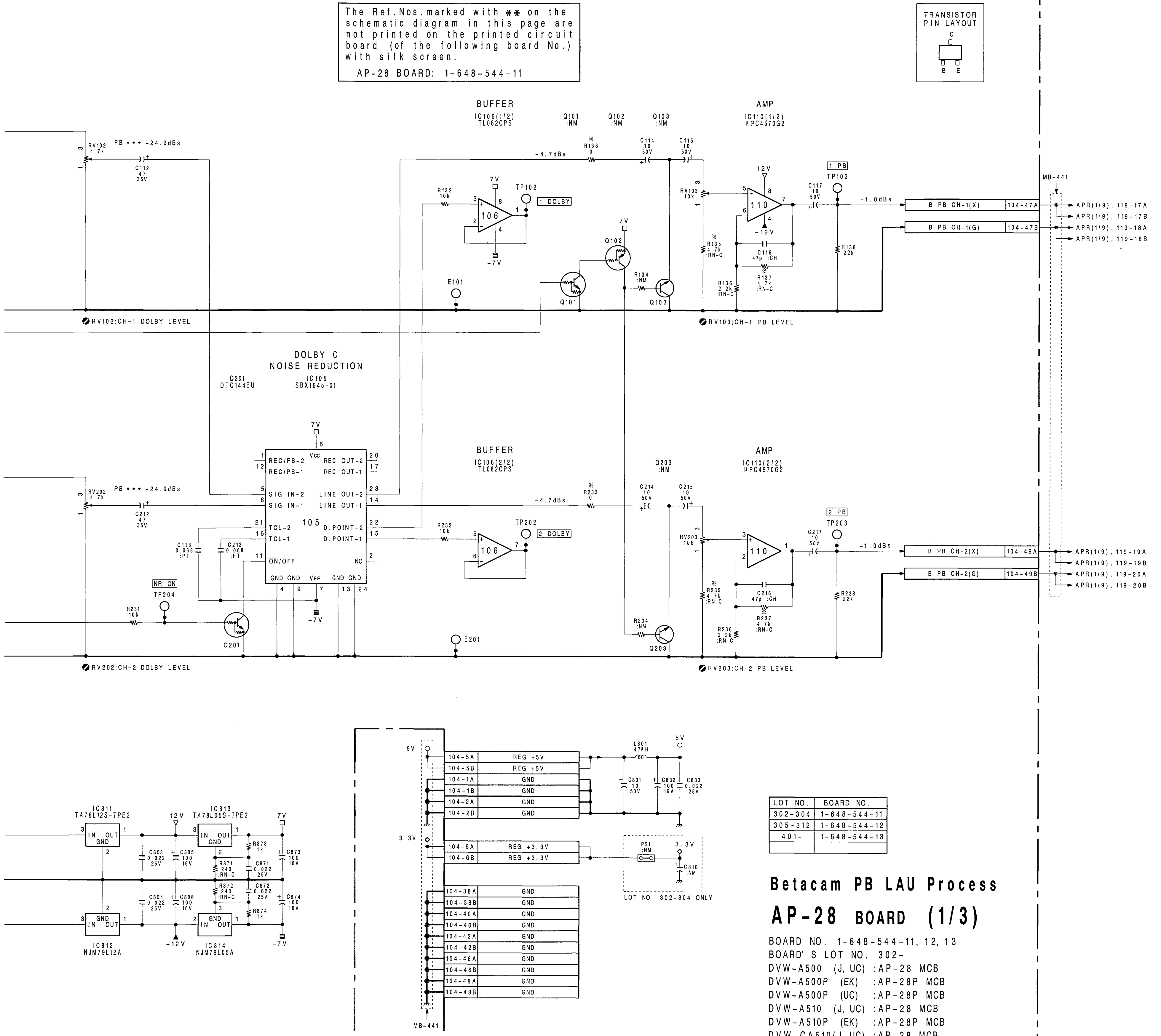

LOT NO.	BOARD NO.
302-304	1-648-544-11
305-312	1-648-544-12
401-	1-648-544-13

Betacam PB LAU Process
AP-28 BOARD (1/3)

BOARD NO. 1-648-544-11, 12, 13
BOARD' S LOT NO. 302-
DVW-A500 (J, UC) :AP-28 MCB
DVW-A500P (EK) :AP-28P MCB
DVW-A500P (UC) :AP-28P MCB
DVW-A510 (J, UC) :AP-28 MCB
DVW-A510P (EK) :AP-28P MCB
DVW-CA510(J, UC) :AP-28 MCB
DVW-CA510P(EK) :AP-28P MCB

DVW-AP28-ALL-A-PB-S/M-04

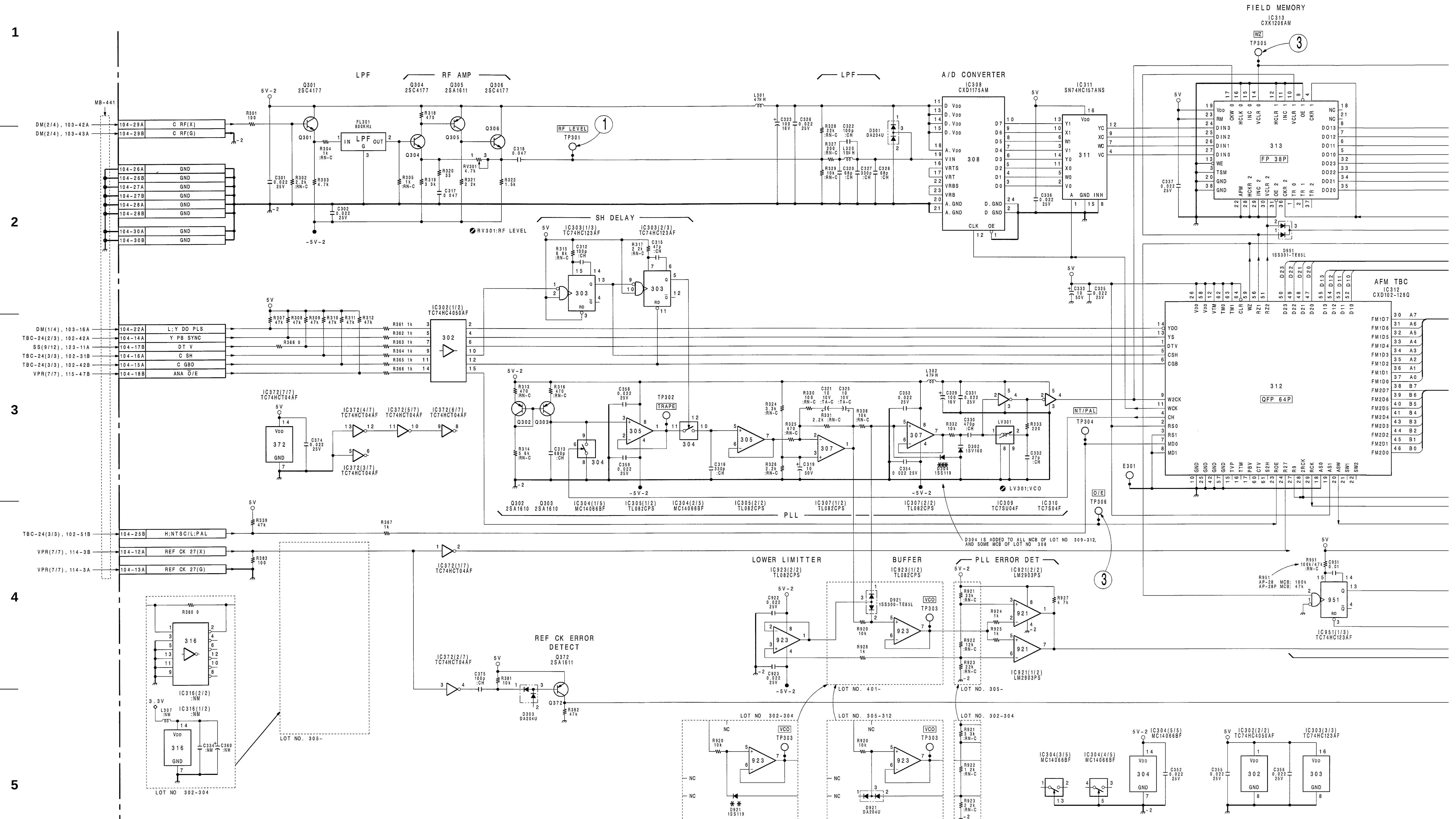

NOTE;
ALL RESISTORS ARE 1/10W UNLESS OTHERWISE NOTED.
ALL CAPACITORS ARE 50V UNLESS OTHERWISE NOTED.

A B C D E F G H

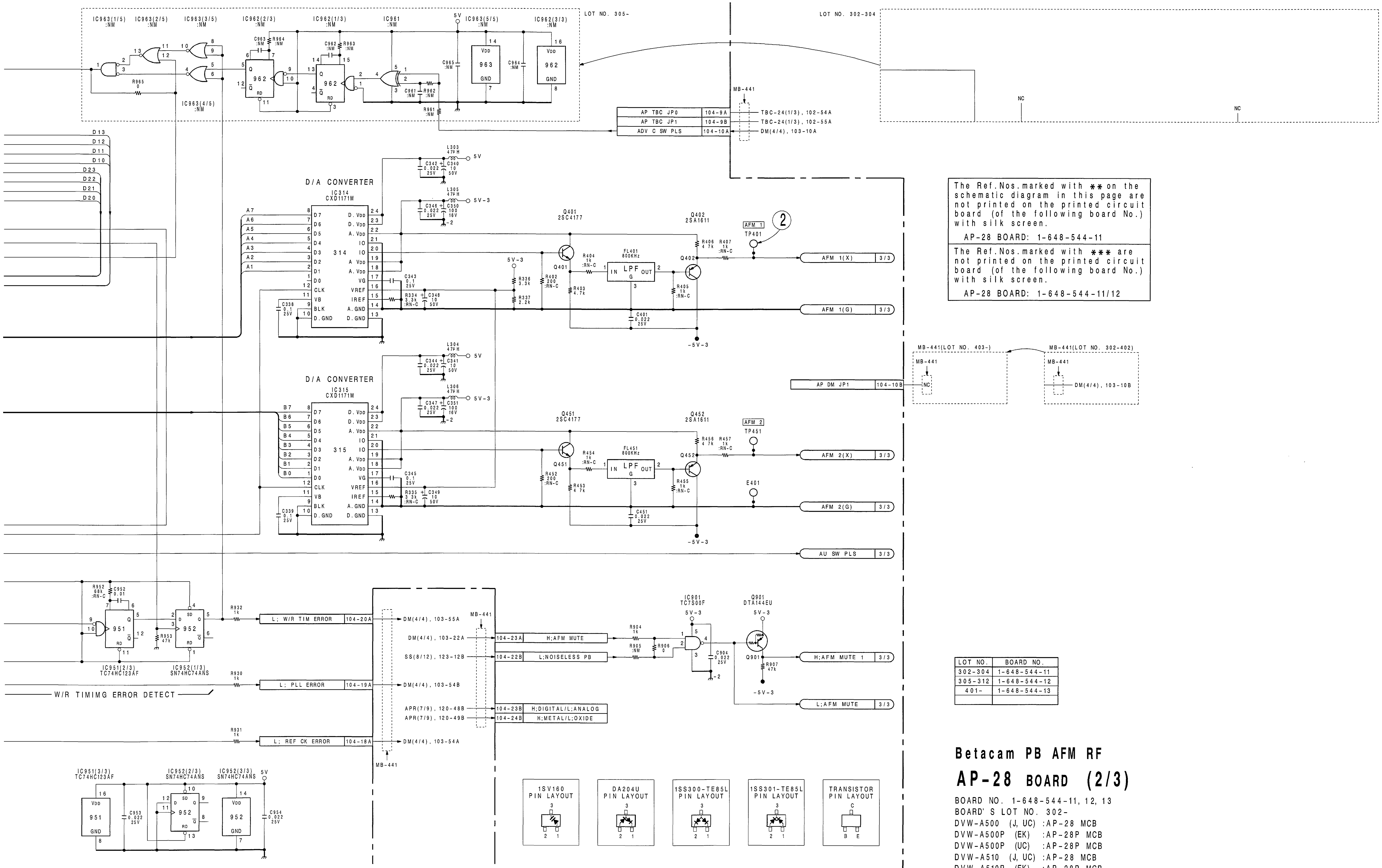

The Ref.Nos.marked with ** on the schematic diagram in this page are not printed on the printed circuit board (of the following board No.) with silk screen.

AP-28 BOARD: 1-648-544-11

The Ref.Nos.marked with *** are not printed on the printed circuit board (of the following board No.) with silk screen.

AP-28 BOARD: 1-648-544-11/12

LOT NO.	BOARD NO.
302-304	1-648-544-11
305-312	1-648-544-12
401-	1-648-544-13

Betacam PB AFM RF

AP-28 BOARD (2/3)

BOARD NO. 1-648-544-11, 12, 13
BOARD' S LOT NO. 302-
DVW-A500 (J, UC) :AP-28 MCB
DVW-A500P (EK) :AP-28P MCB
DVW-A500P (UC) :AP-28P MCB
DVW-A510 (J, UC) :AP-28 MCB
DVW-A510P (EK) :AP-28P MCB
DVW-CA510(J, UC) :AP-28 MCB
DVW-CA510P(EK) :AP-28P MCB

DVW-AP28-ALL-A-PB-S/M-04

AP-28 (3/3)

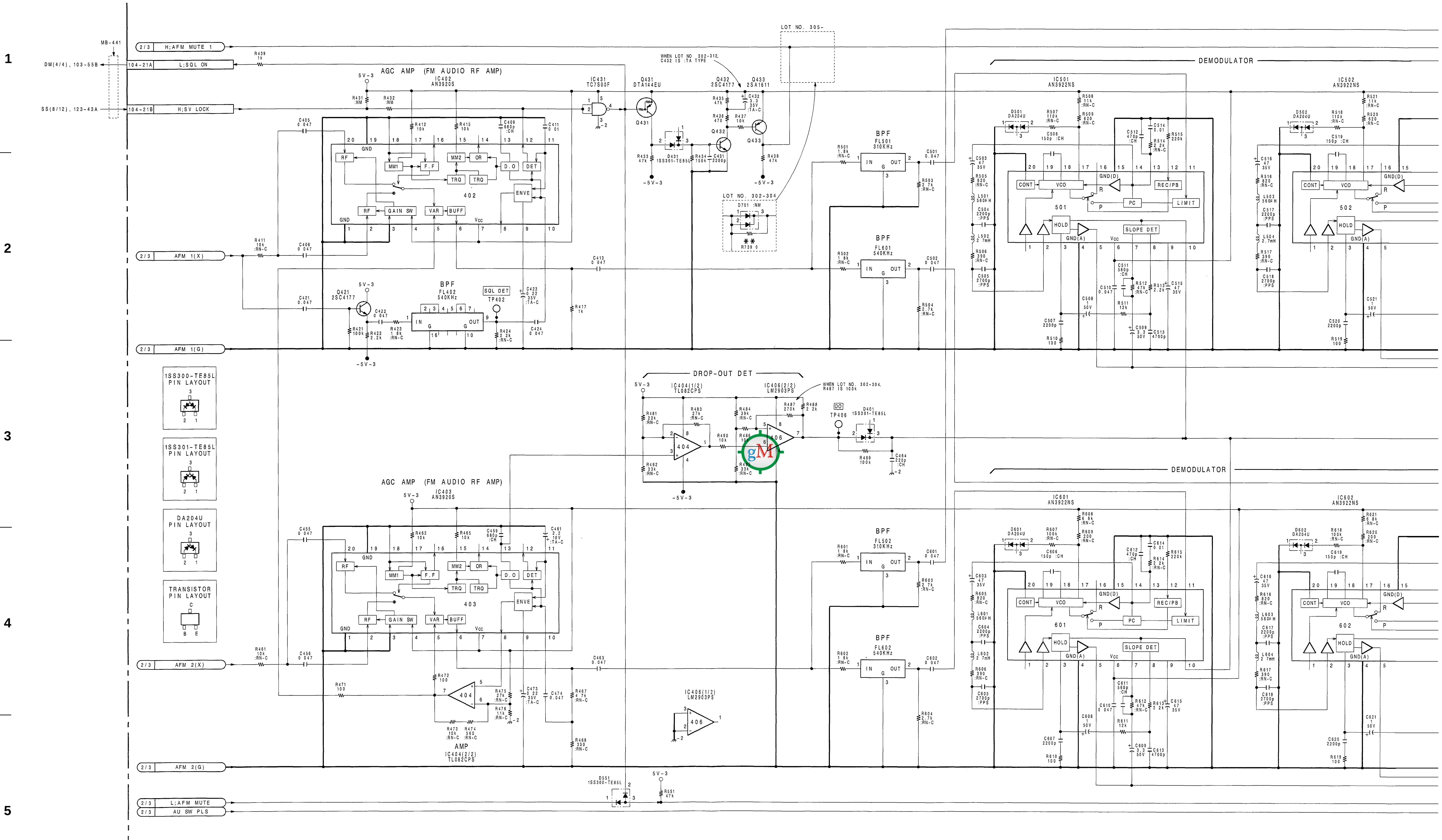

NOTE;
ALL RESISTORS ARE 1/10W UNLESS OTHERWISE NOTED.
ALL CAPACITORS ARE 50V UNLESS OTHERWISE NOTED.

1-122

 AP-28 (3/3)

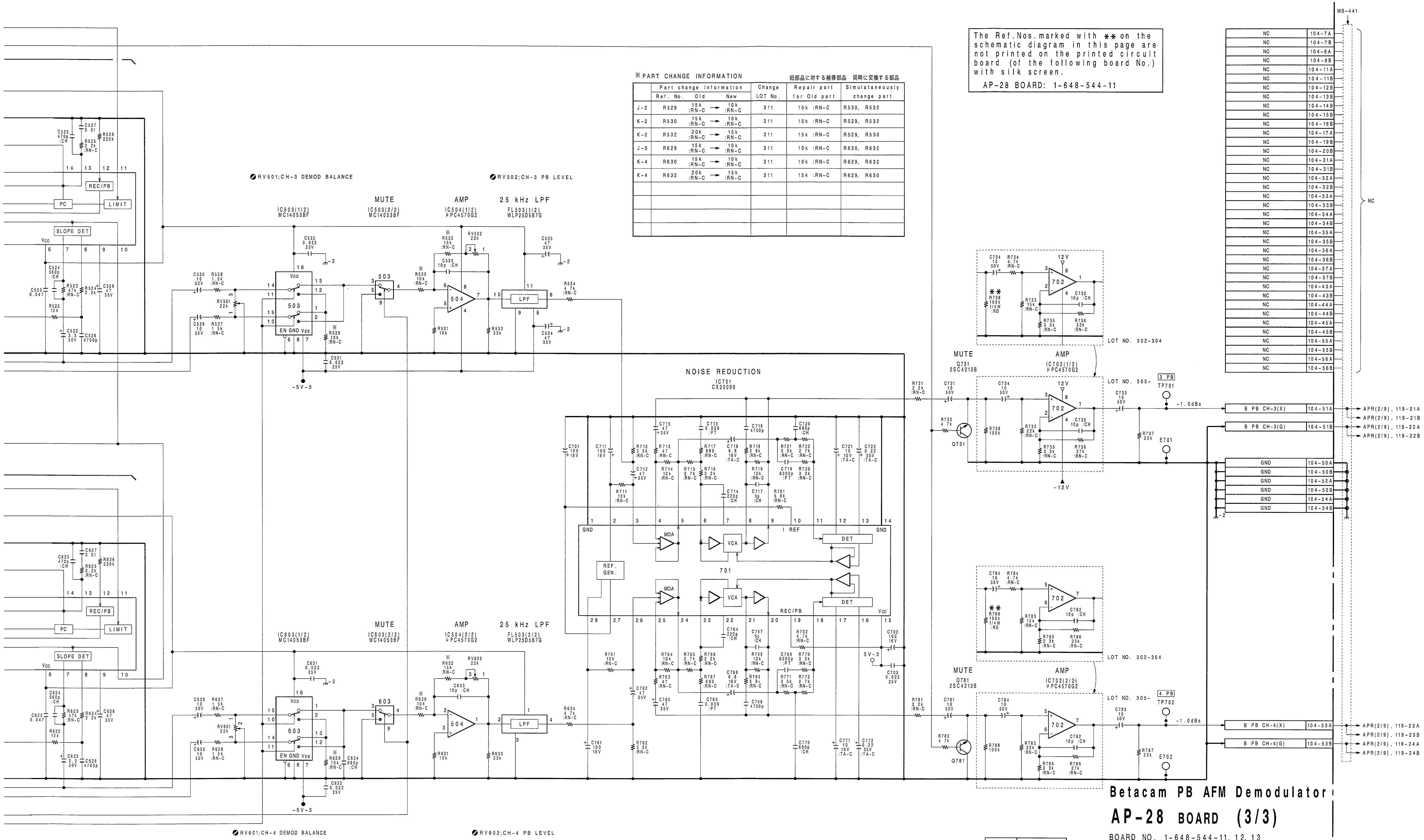

※PART CHANGE INFORMATION

旧部品に対する補修部品　同時に交換する部品

	Part change information			Change	Repair part	Simulataneously
	Ref. No.	Old	New	LOT No.	for Old part	change part
J-2	R529	15k :RN-C	→ 10k :RN-C	311	10k :RN-C	R530, R532
K-2	R530	15k :RN-C	→ 10k :RN-C	311	10k :RN-C	R529, R532
K-2	R532	20k :RN-C	→ 15k :RN-C	311	15k :RN-C	R529, R530
J-5	R629	15k :RN-C	→ 10k :RN-C	311	10k :RN-C	R630, R632
K-4	R630	15k :RN-C	→ 10k :RN-C	311	10k :RN-C	R629, R632
K-4	R632	20k :RN-C	→ 15k :RN-C	311	15k :RN-C	R629, R630

The Ref.Nos.marked with ** on the schematic diagram in this page are not printed on the printed circuit board (of the following board No.) with silk screen.

AP-28 BOARD: 1-648-544-11

LOT NO.	BOARD NO.
302-304	1-648-544-11
305-312	1-648-544-12
401-	1-648-544-13

Betacam PB AFM Demodulator

AP-28 BOARD (3/3)

BOARD NO. 1-648-544-11, 12, 13
BOARD' S LOT NO. 302-
DVW-A500 (J, UC) :AP-28 MCB
DVW-A500P (EK) :AP-28P MCB
DVW-A500P (UC) :AP-28P MCB
DVW-A510 (J, UC) :AP-28 MCB
DVW-A510P (EK) :AP-28P MCB
DVW-CA510(J, UC) :AP-28 MCB
DVW-CA510P(EK) :AP-28P MCB

DVW-AP28-ALL-A-PB-S/M-04

 CP-218

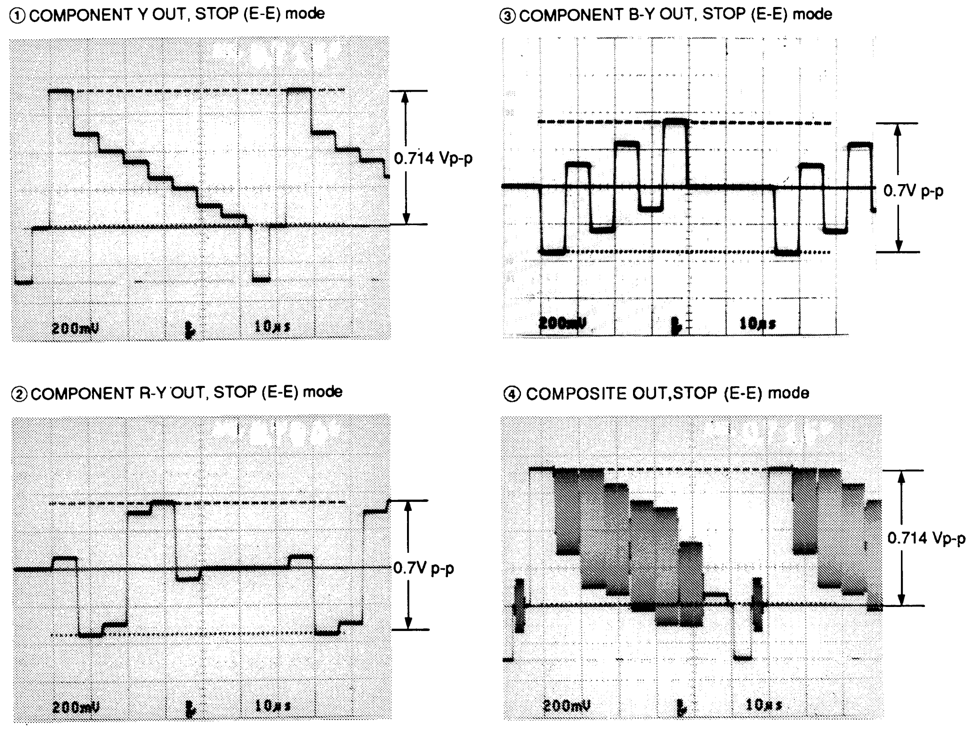

Measurement Condition
INPUT SIGNAL : 75% COLOR BARS
MODE : STOP (E-E) mode

For DVW-A500/500

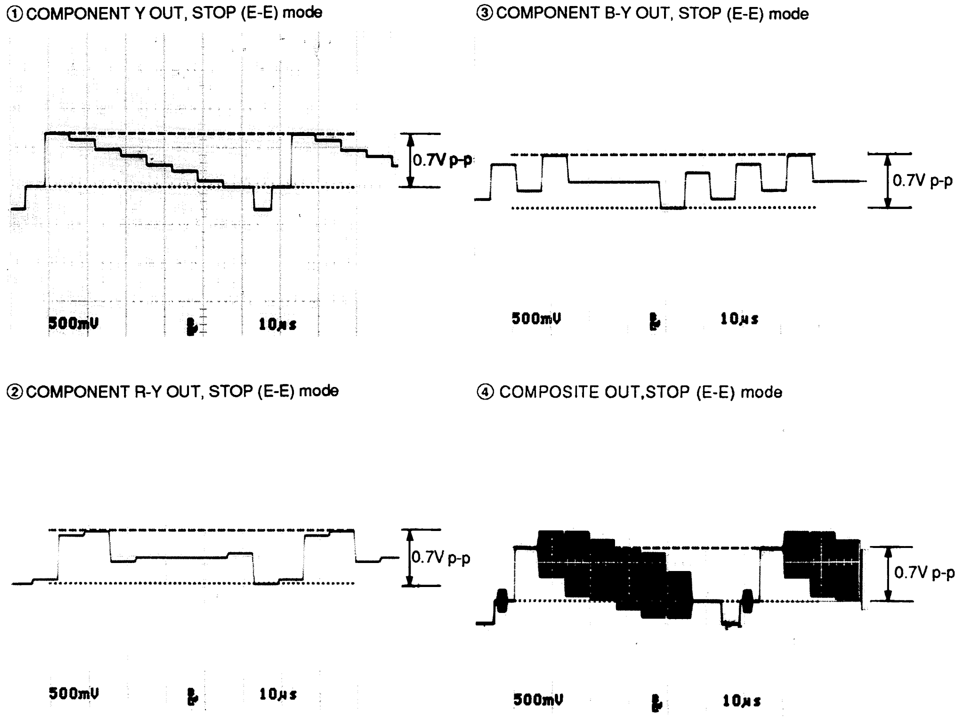

Measurement Condition
INPUT SIGNAL : 100% COLOR BARS
MODE : STOP (E-E) mode

For DVW-A500P/500P

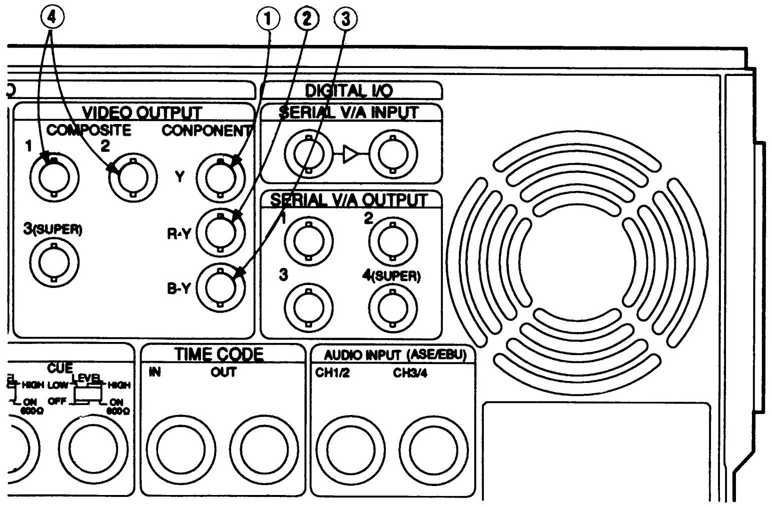

 1-124

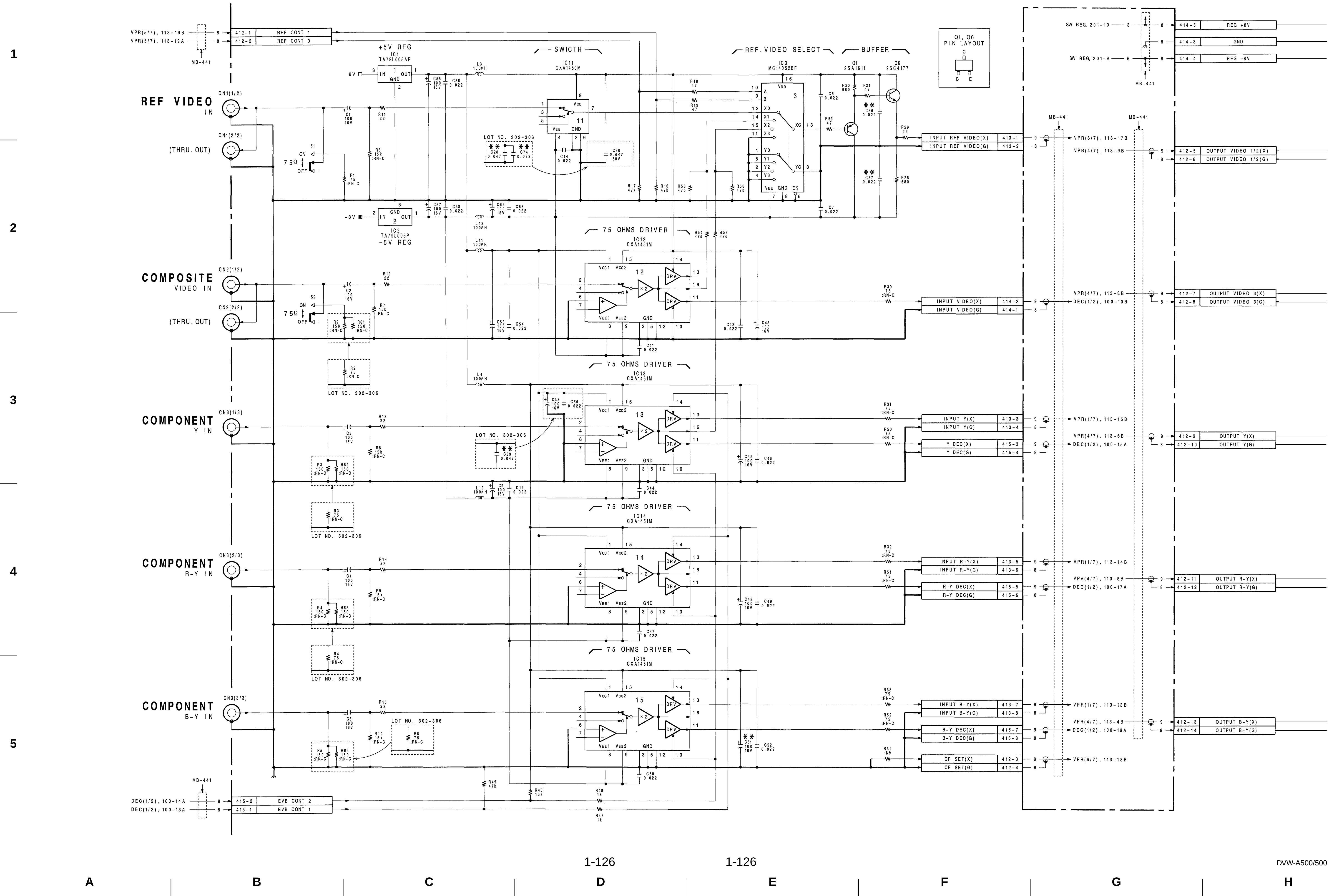
REF VIDEO
IN
(THRU. OUT)
COMPOSITE
VIDEO IN
(THRU. OUT)
COMPONENT
Y IN
COMPONENT
R-Y IN
COMPONENT
B-Y IN
+5V REG
IC1
TA78L005AP
-5V REG
IC2
TA79L005P
SWICTH
IC11
CXA1450M
REF. VIDEO SELECT
IC3
MC14052BF
BUFFER
Q1
2SA1611
Q6
2SC4177
Q1, Q6
PIN LAYOUT
75 OHMS DRIVER
IC12
CXA1451M
75 OHMS DRIVER
IC13
CXA1451M
75 OHMS DRIVER
IC14
CXA1451M
75 OHMS DRIVER
IC15
CXA1451M
LOT NO. 302-306
MB-441
REF CONT 1
REF CONT 0
EVB CONT 2
EVB CONT 1
REG +8V
GND
REG -8V
INPUT REF VIDEO(X)
INPUT REF VIDEO(G)
OUTPUT VIDEO 1/2(X)
OUTPUT VIDEO 1/2(G)
INPUT VIDEO(X)
INPUT VIDEO(G)
OUTPUT VIDEO 3(X)
OUTPUT VIDEO 3(G)
INPUT Y(X)
INPUT Y(G)
Y DEC(X)
Y DEC(G)
OUTPUT Y(X)
OUTPUT Y(G)
INPUT R-Y(X)
INPUT R-Y(G)
R-Y DEC(X)
R-Y DEC(G)
OUTPUT R-Y(X)
OUTPUT R-Y(G)
INPUT B-Y(X)
INPUT B-Y(G)
B-Y DEC(X)
B-Y DEC(G)
OUTPUT B-Y(X)
OUTPUT B-Y(G)
CF SET(X)
CF SET(G)

http://getMANUAL.com

The Ref.Nos.marked with ✱✱ on the schematic diagram in this page are not printed on the printed circuit board (of the following board No.) with silk screen.

CP-218 BOARD: 1-648-555-11

LOT NO.	BOARD NO.
302-306	1-648-555-11
307-	1-648-555-12

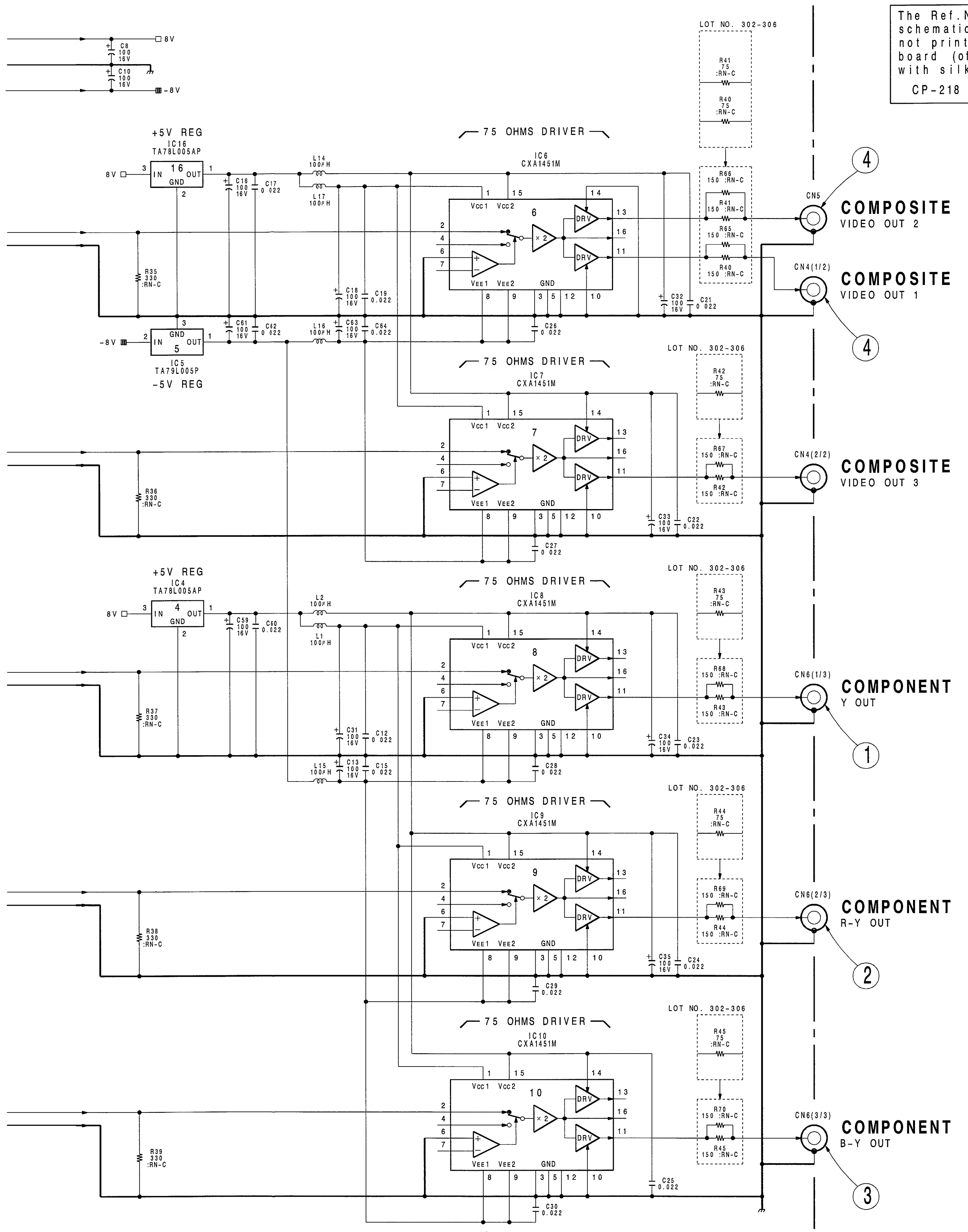

NOTE;
ALL RESISTORS ARE 1/10W UNLESS OTHERWISE NOTED.
ALL CAPACITORS ARE 25V UNLESS OTHERWISE NOTED.

Rear Connector Board (Analog Video)

CP-218 BOARD

BOARD NO. 1-648-555-11, 12
BOARD' S LOT NO. 302-
DVW-A500(J, UC) :CP-218 MCB
DVW-A500P(EK) :CP-218 MCB
DVW-A500P(UC) :CP-218 MCB
DVW-500 (J, UC) :CP-218 MCB
DVW-500P (EK) :CP-218 MCB
DVW-500P (UC) :CP-218 MCB

DVW-CP218-ALL-REC-S/M-04

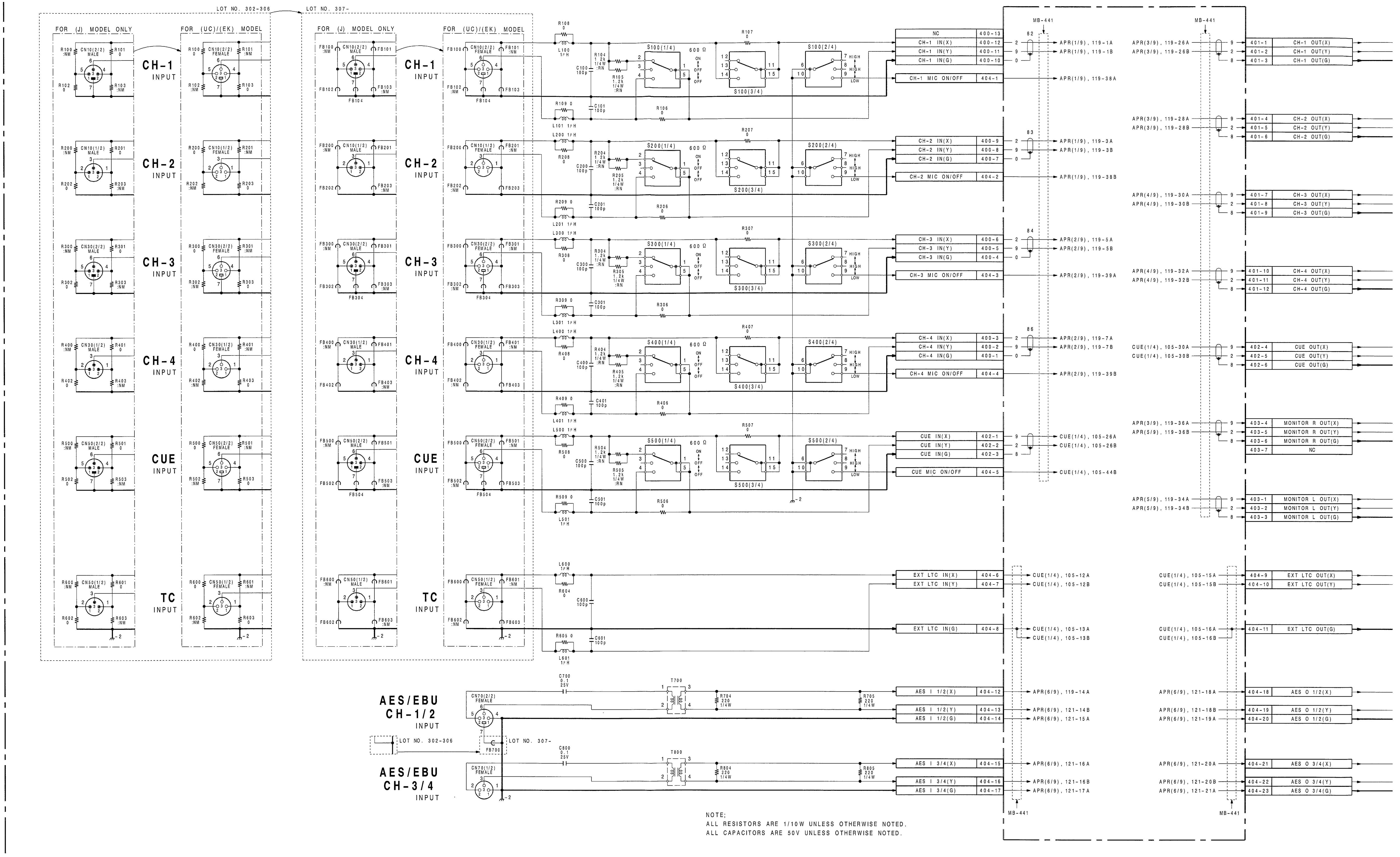

NOTE;
ALL RESISTORS ARE 1/10W UNLESS OTHERWISE NOTED.
ALL CAPACITORS ARE 50V UNLESS OTHERWISE NOTED.

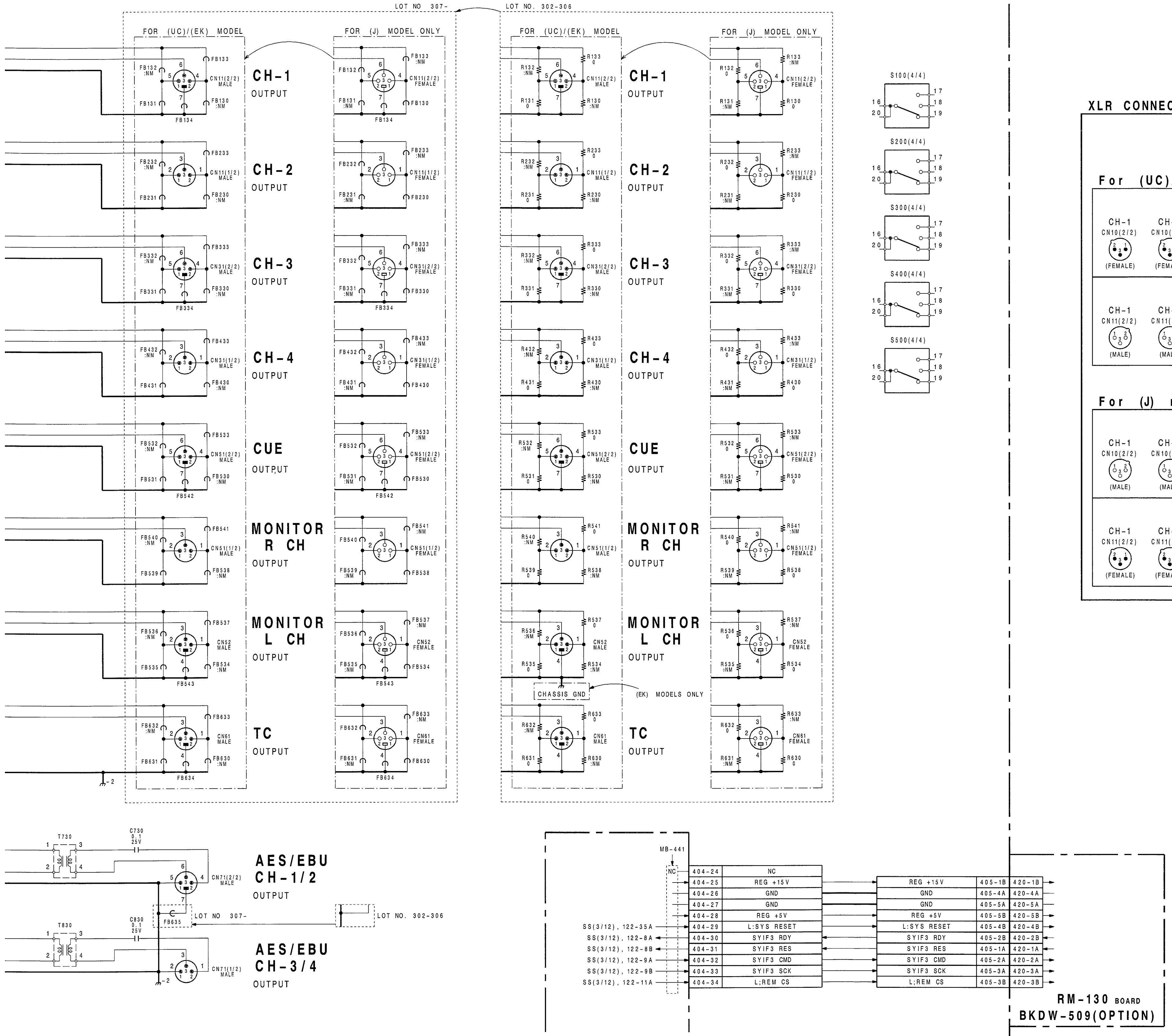

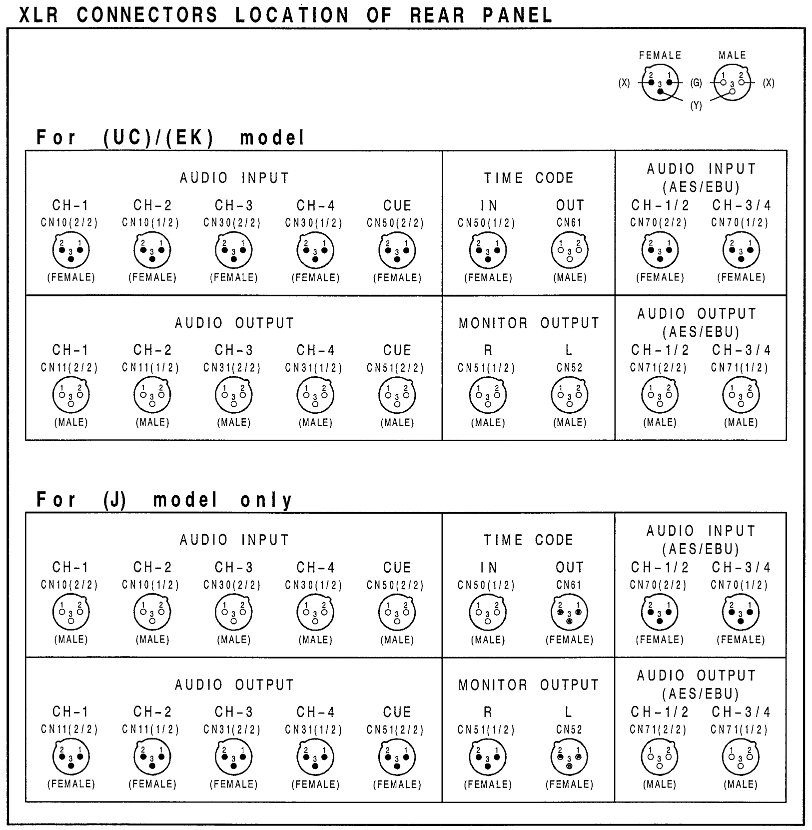

LOT No.	BOARD No.
302-306	1-648-556-11
307-	1-648-556-12

Rear Connector Board (Analog/Digital Audio, TC)

CP-220 BOARD

BOARD NO. 1-648-556-11, 12
BOARD' S LOT NO. 302-
DVW-A500 (J) :CP-220J MCB
DVW-A500 (UC) :CP-220 MCB
DVW-A500P(EK) :CP-220 MCB
DVW-A500P(UC) :CP-220 MCB
DVW-500 (J) :CP-220J MCB
DVW-500 (UC) :CP-220 MCB
DVW-500P (EK) :CP-220 MCB
DVW-500P (UC) :CP-220 MCB

DVW-CP220-ALL-REC-S/M-04

SS-52A/52 Board -A Side-

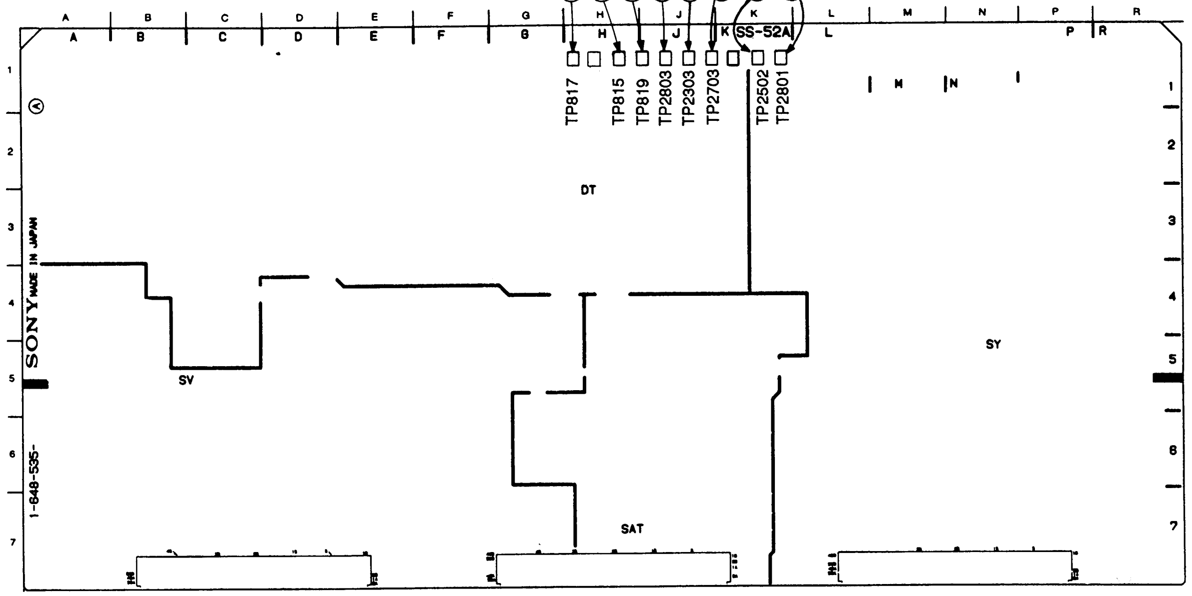

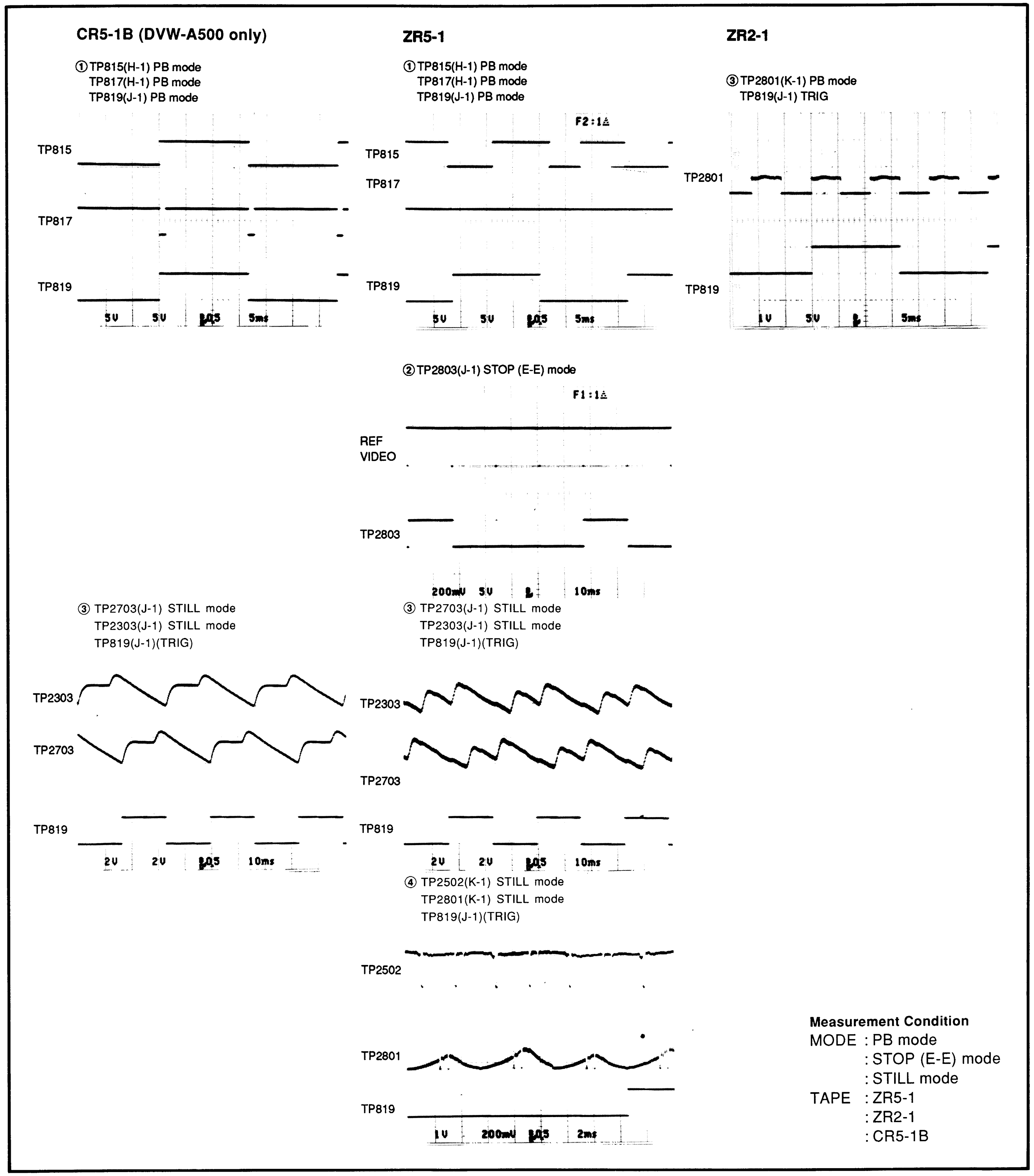

For DVW-A500/500

 SS-52A/52

CR5-1BPS (DVW-A500P only)

① TP815(H-1) PB mode
TP817(H-1) PB mode
TP819(J-1) PB mode

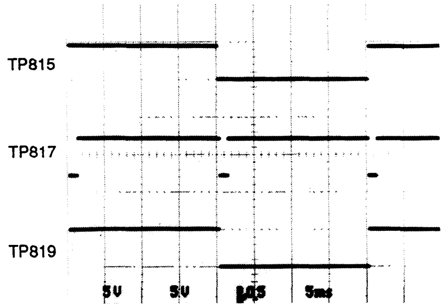

③ TP2703(J-1) STILL mode
TP2303(J-1) STILL mode
TP819(J-1)(TRIG)

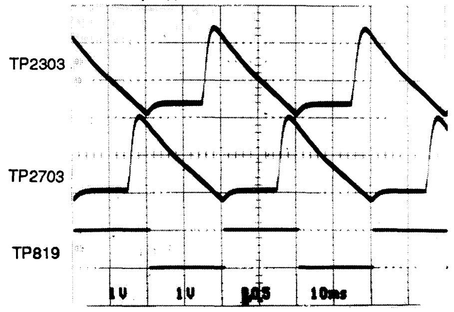

ZR5-1P

① TP815(H-1) PB mode
TP817(H-1) PB mode
TP819(J-1) PB mode

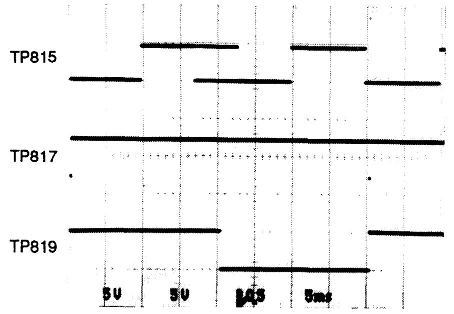

② TP2803(J-1) STOP (E-E) mode

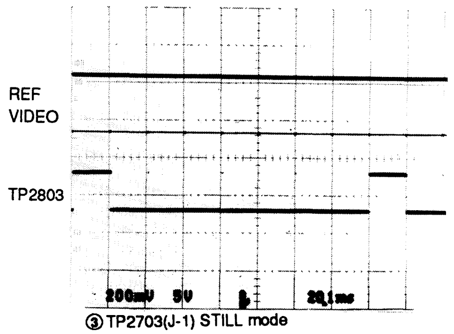

③ TP2703(J-1) STILL mode
TP2303(J-1) STILL mode
TP819(J-1)(TRIG)

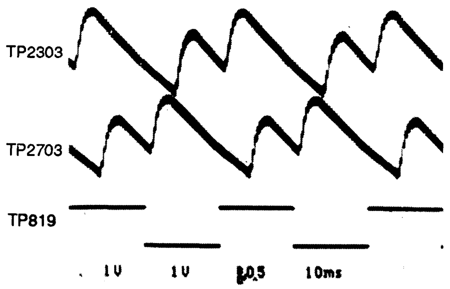

④ TP2502(K-1) STILL mode
TP2801(K-1) STILL mode
TP819(J-1)(TRIG)

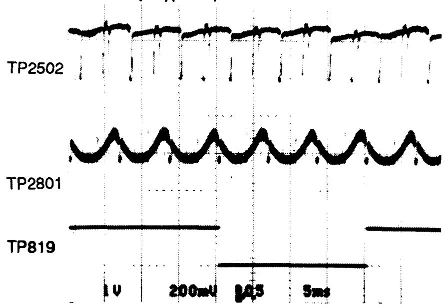

ZR2-1P

④ TP2801 (K-1) PB mode
TP891 (J-1) TRIG)

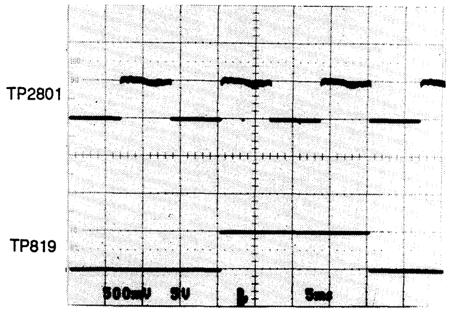

Measurement Condition
MODE : PB mode
: STOP (E-E) mode
: STILL mode
TAPE : ZR5-1P
: ZR2-1P
: CR5-1BPS

For DVW-A500P/500P

 1-131

SS-52A/52 (1/12)

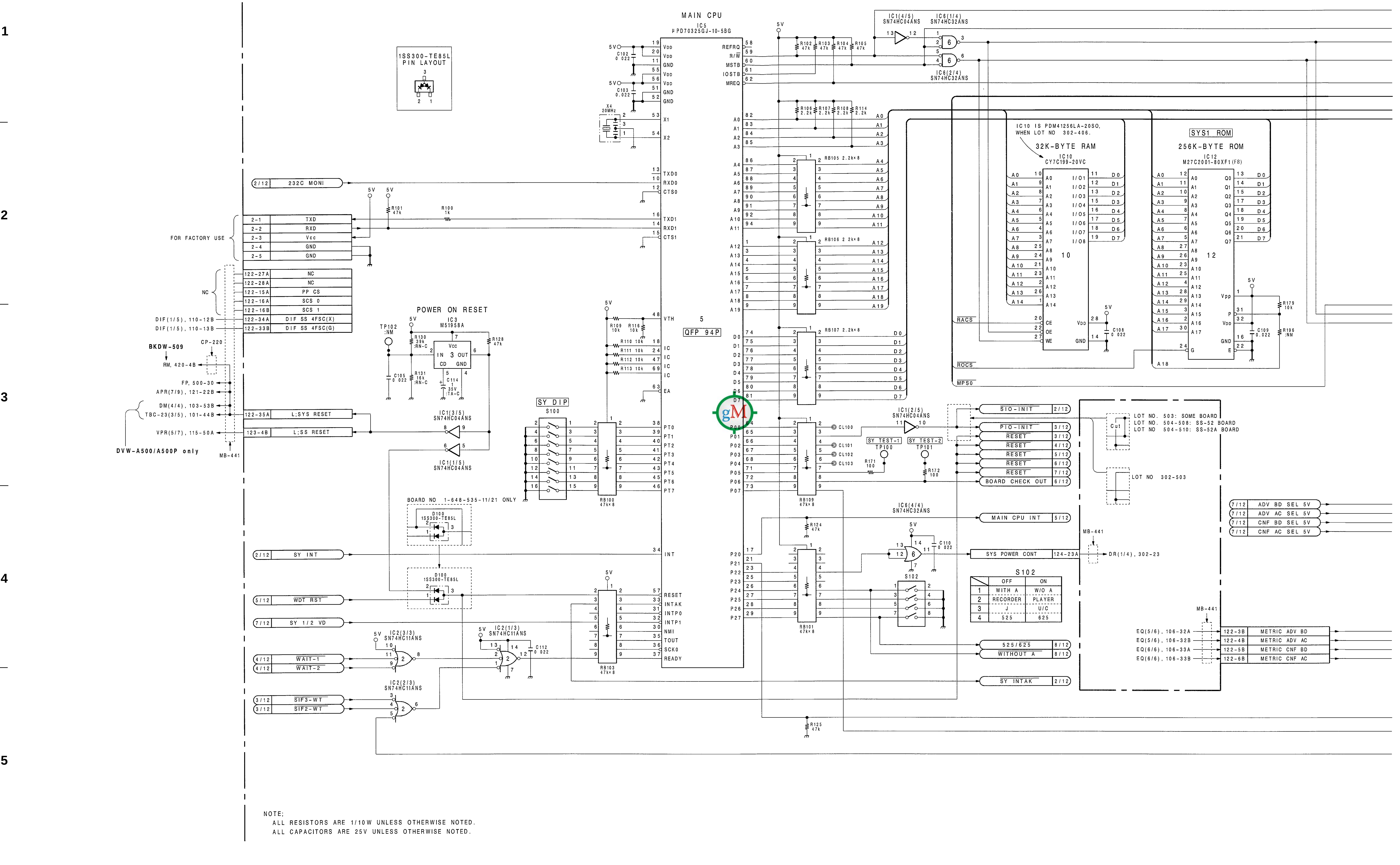

S102	OFF	ON
1	WITH A	W/O A
2	RECORDER	PLAYER
3	J	U/C
4	525	625

1-132

SS-52A/52 (1/12)

1
2
3
4
5

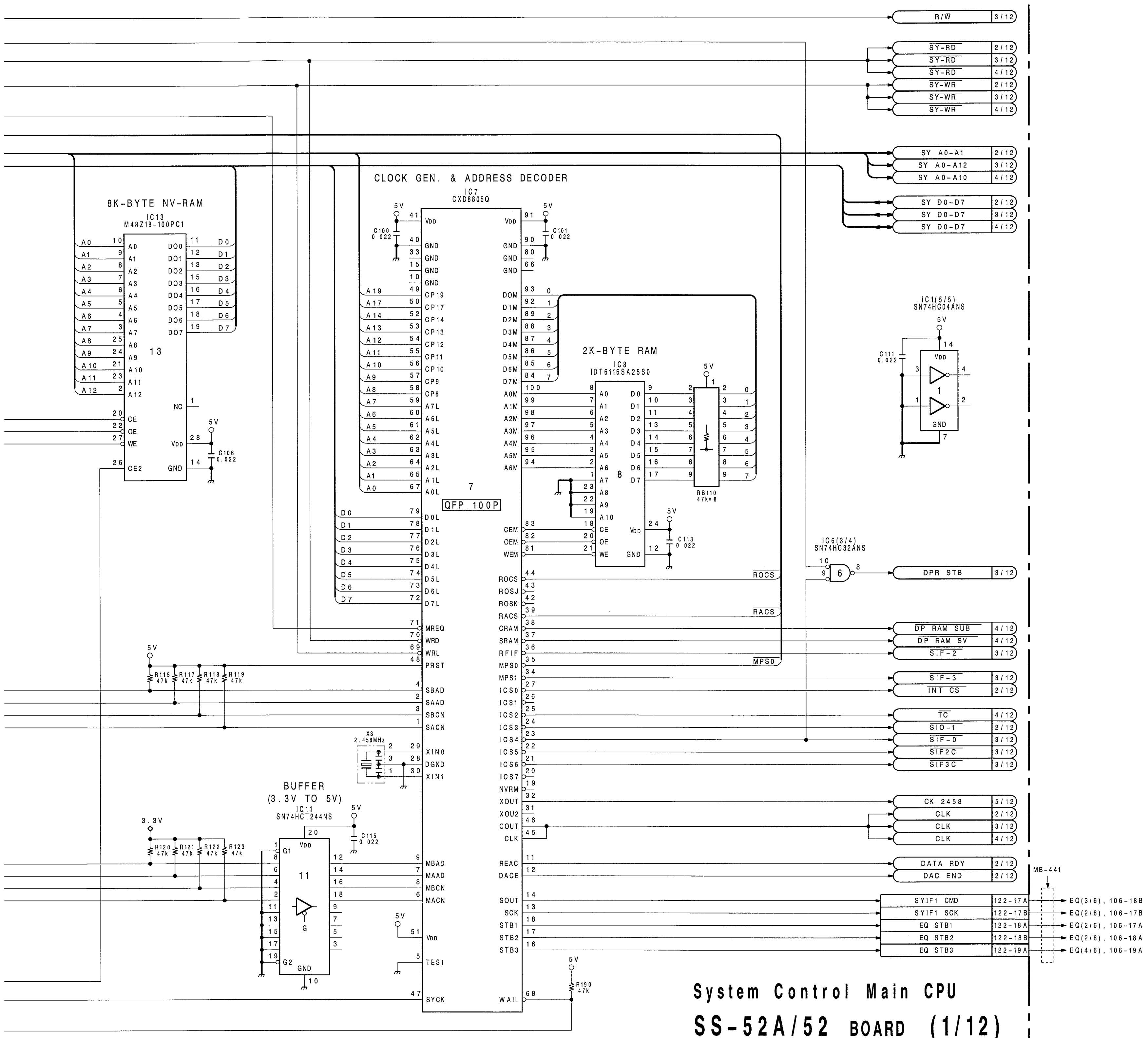

System Control Main CPU

SS-52A/52 BOARD (1/12)

LOT NO.	SS-52A BOARD NO.	SS-52 BOARD NO.
302-305	1-648-535-11	1-648-535-21
306	1-648-535-11, 12	1-648-535-21, 22
307-410	1-648-535-12	1-648-535-22
411-508	1-648-535-13	1-648-535-23
509-510	1-648-535-13	1-648-535-24
511-	1-648-535-14	1-648-535-24

BOARD NO. 1-648-535-11, 12, 13, 14/21, 22, 23, 24
BOARD' S LOT NO. 302-
DVW-A500(J, UC) :SS-52A MCB
DVW-A500P(EK) :SS-52AP MCB
DVW-A500P(UC) :SS-52AP MCB
DVW-500 (J, UC) :SS-52 MCB
DVW-500P (EK) :SS-52P MCB
DVW-500P (UC) :SS-52P MCB

DVW-SS52-ALL-REC-S/M-05

 SS-52A/52 (2/12)

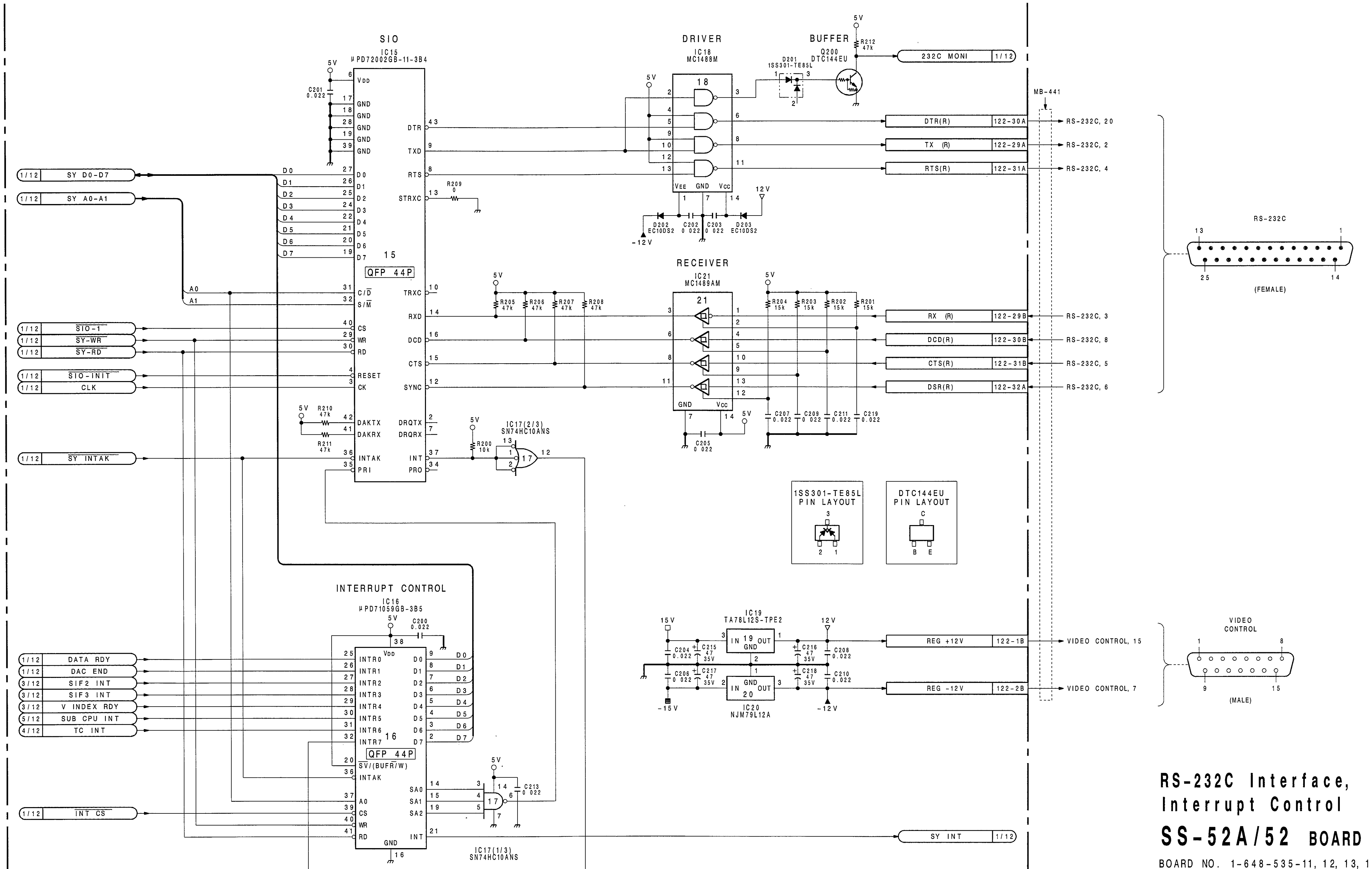

LOT NO.	SS-52A BOARD NO.	SS-52 BOARD NO.
302-305	1-648-535-11	1-648-535-21
306	1-648-535-11, 12	1-648-535-21, 22
307-410	1-648-535-12	1-648-535-22
411-508	1-648-535-13	1-648-535-23
509-510	1-648-535-13	1-648-535-24
511-	1-648-535-14	1-648-535-24

NOTE;
ALL RESISTORS ARE 1/10W UNLESS OTHERWISE NOTED.
ALL CAPACITORS ARE 25V UNLESS OTHERWISE NOTED.

RS-232C Interface, Interrupt Control

SS-52A/52 BOARD (2/12)

BOARD NO. 1-648-535-11, 12, 13, 14/21, 22, 23, 24
BOARD' S LOT NO. 302-
DVW-A500(J, UC) :SS-52A MCB
DVW-A500P(EK) :SS-52AP MCB
DVW-A500P(UC) :SS-52AP MCB
DVW-500 (J, UC) :SS-52 MCB
DVW-500P (EK) :SS-52P MCB
DVW-500P (UC) :SS-52P MCB

DVW-SS52-ALL-REC-S/M-05

SS-52A/52 (3/12)

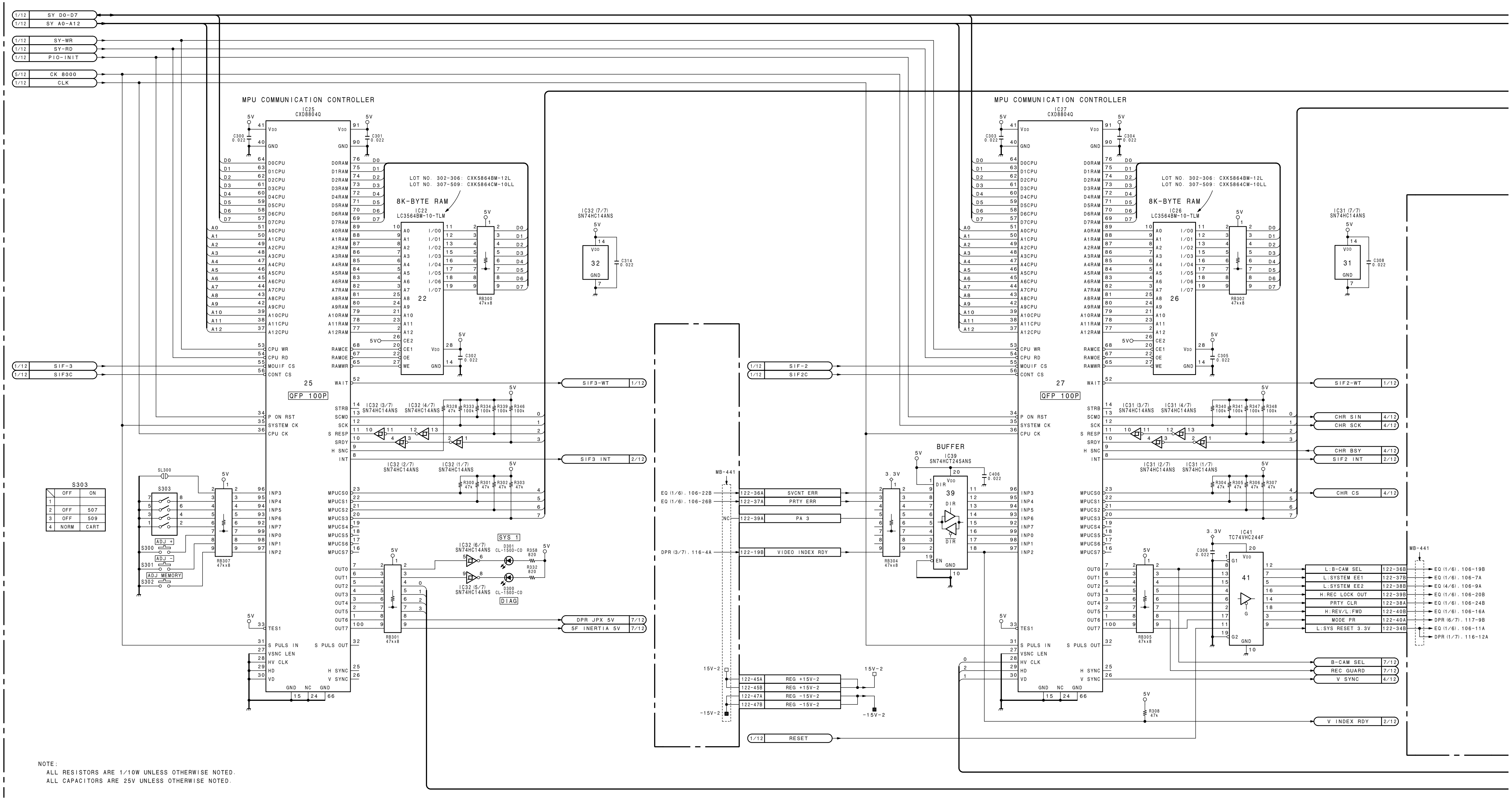

1
2
3
4
5

1-136

DVW-A500/500

A B C D E F G H

http://getMANUAL.com

 SS-52A/52 (3/12)

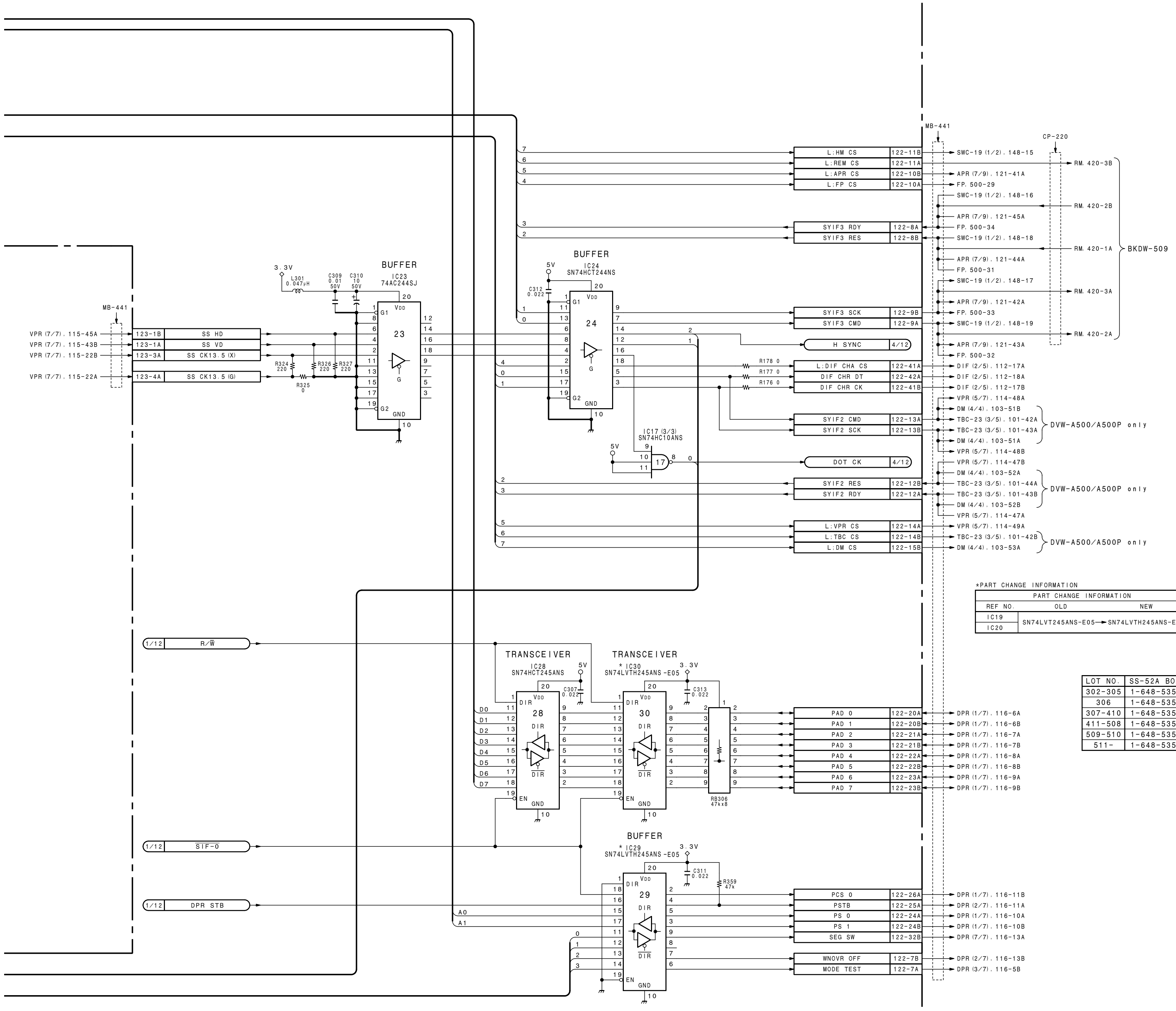

*PART CHANGE INFORMATION

PART CHANGE INFORMATION			CHANGE	REPAIR PART	SIMULATANEOUSIY
REF NO.	OLD	NEW	LOT NO.	FOR OLD PART	CHANGE PART
IC19	SN74LVT245ANS-E05 →	SN74LVTH245ANS-E05	905	SN74LVTH245ANS-E05	IC30
IC20					IC29

LOT NO.	SS-52A BOARD NO.	SS-52 BOARD NO.
302-305	1-648-535-11	1-648-535-21
306	1-648-535-11, 12	1-648-535-21, 22
307-410	1-648-535-12	1-648-535-22
411-508	1-648-535-13	1-648-535-23
509-510	1-648-535-13	1-648-535-24
511-	1-648-535-14	1-648-535-24

Audio/Video System Control

SS-52A/52 BOARD (3/12)

BOARD NO. 1-648-535-11, 12, 13, 14/21, 22, 23, 24
BOARD'S LOT NO. 302-
DVW-A500 (J, UC) : SS-52A MCB
DVW-A500P (EK) : SS-52AP MCB
DVW-A500P (UC) : SS-52AP MCB
DVW-500 (J, UC) : SS-52 MCB
DVW-500P (EK) : SS-52P MCB
DVW-500P (UC) : SS-52P MCB

DVW-SS52-ALL-REC-S/M-05

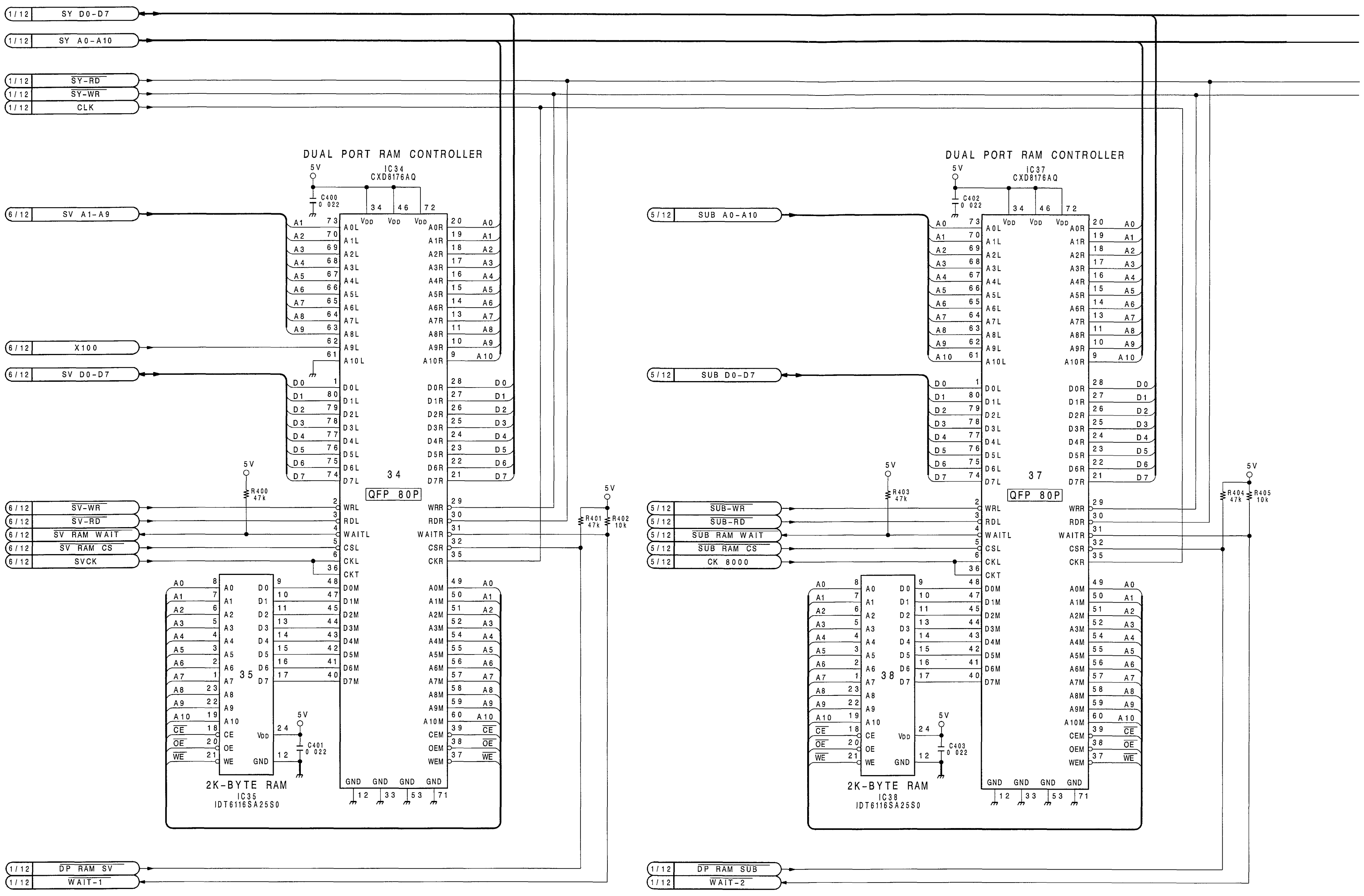

NOTE;
ALL RESISTORS ARE 1/10W UNLESS OTHERWISE NOTED.
ALL CAPACITORS ARE 25V UNLESS OTHERWISE NOTED.

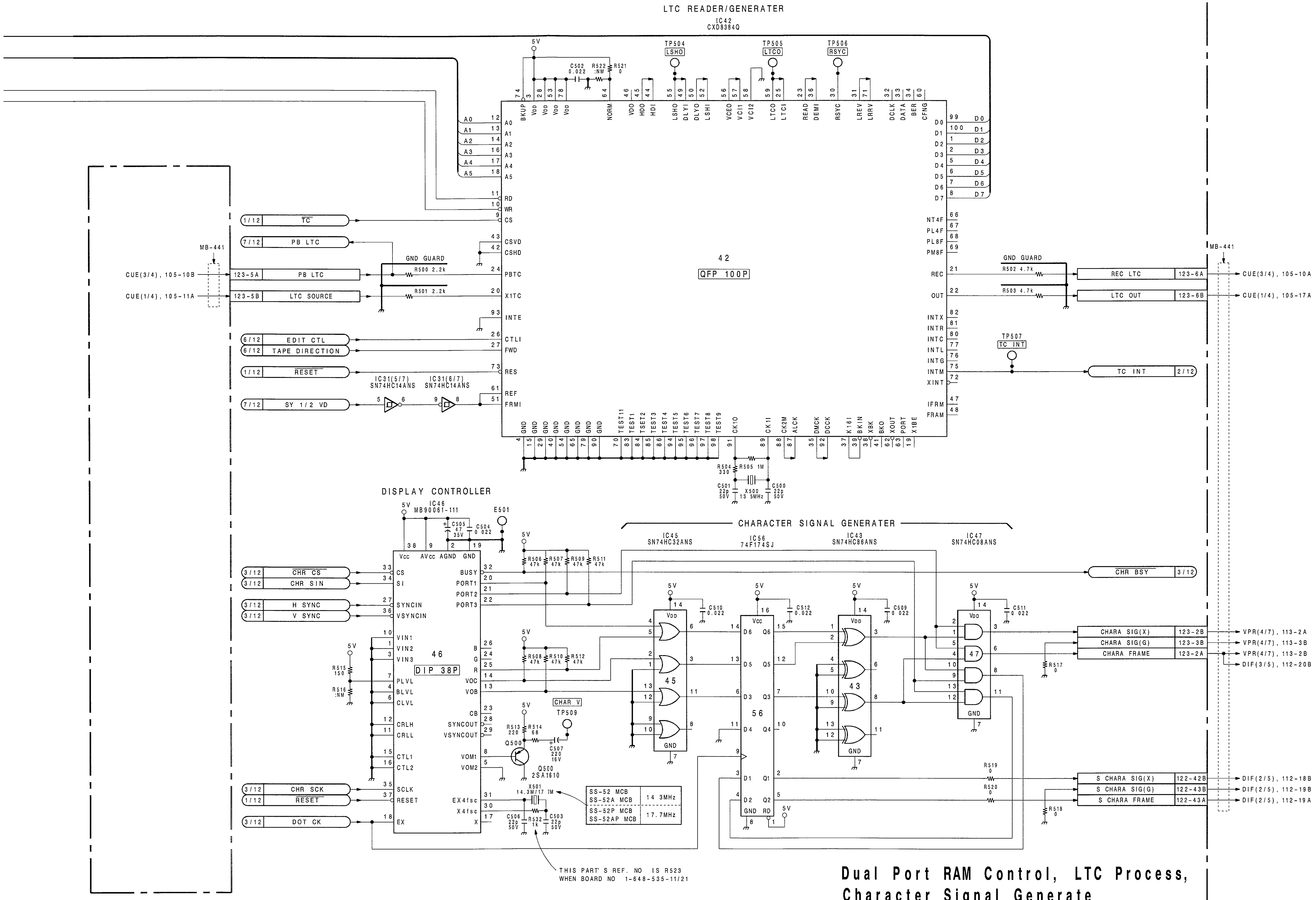

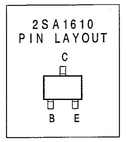

LOT NO.	SS-52A BOARD NO.	SS-52 BOARD NO.
302-305	1-648-535-11	1-648-535-21
306	1-648-535-11, 12	1-648-535-21, 22
307-410	1-648-535-12	1-648-535-22
411-508	1-648-535-13	1-648-535-23
509-510	1-648-535-13	1-648-535-24
511-	1-648-535-14	1-648-535-24

Dual Port RAM Control, LTC Process, Character Signal Generate

SS-52A/52 BOARD (4/12)

BOARD NO. 1-648-535-11, 12, 13, 14/21, 22, 23, 24
BOARD'S LOT NO. 302-
DVW-A500(J, UC) :SS-52A MCB
DVW-A500P(EK) :SS-52AP MCB
DVW-A500P(UC) :SS-52AP MCB
DVW-500 (J, UC) :SS-52 MCB
DVW-500P (EK) :SS-52P MCB
DVW-500P (UC) :SS-52P MCB

DVW-SS52-ALL-REC-S/M-05

SS-52A/52 (5/12)

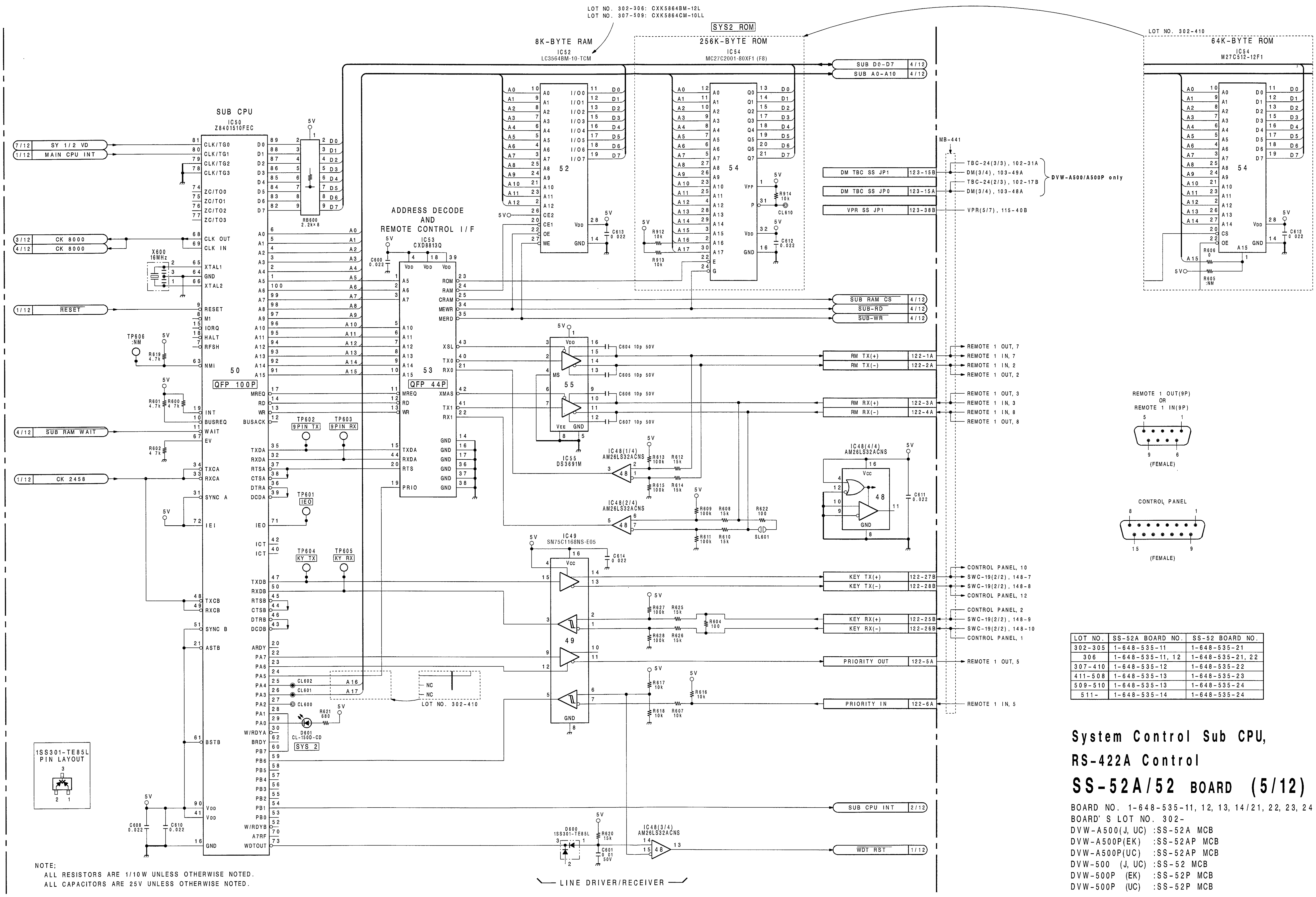

LOT NO.	SS-52A BOARD NO.	SS-52 BOARD NO.
302-305	1-648-535-11	1-648-535-21
306	1-648-535-11, 12	1-648-535-21, 22
307-410	1-648-535-12	1-648-535-22
411-508	1-648-535-13	1-648-535-23
509-510	1-648-535-13	1-648-535-24
511-	1-648-535-14	1-648-535-24

System Control Sub CPU, RS-422A Control

SS-52A/52 BOARD (5/12)

BOARD NO. 1-648-535-11, 12, 13, 14/21, 22, 23, 24
BOARD' S LOT NO. 302-
DVW-A500(J, UC) :SS-52A MCB
DVW-A500P(EK) :SS-52AP MCB
DVW-A500P(UC) :SS-52AP MCB
DVW-500 (J, UC) :SS-52 MCB
DVW-500P (EK) :SS-52P MCB
DVW-500P (UC) :SS-52P MCB

DVW-SS52-ALL-REC-S/M-05

NOTE;
ALL RESISTORS ARE 1/10W UNLESS OTHERWISE NOTED.
ALL CAPACITORS ARE 25V UNLESS OTHERWISE NOTED.

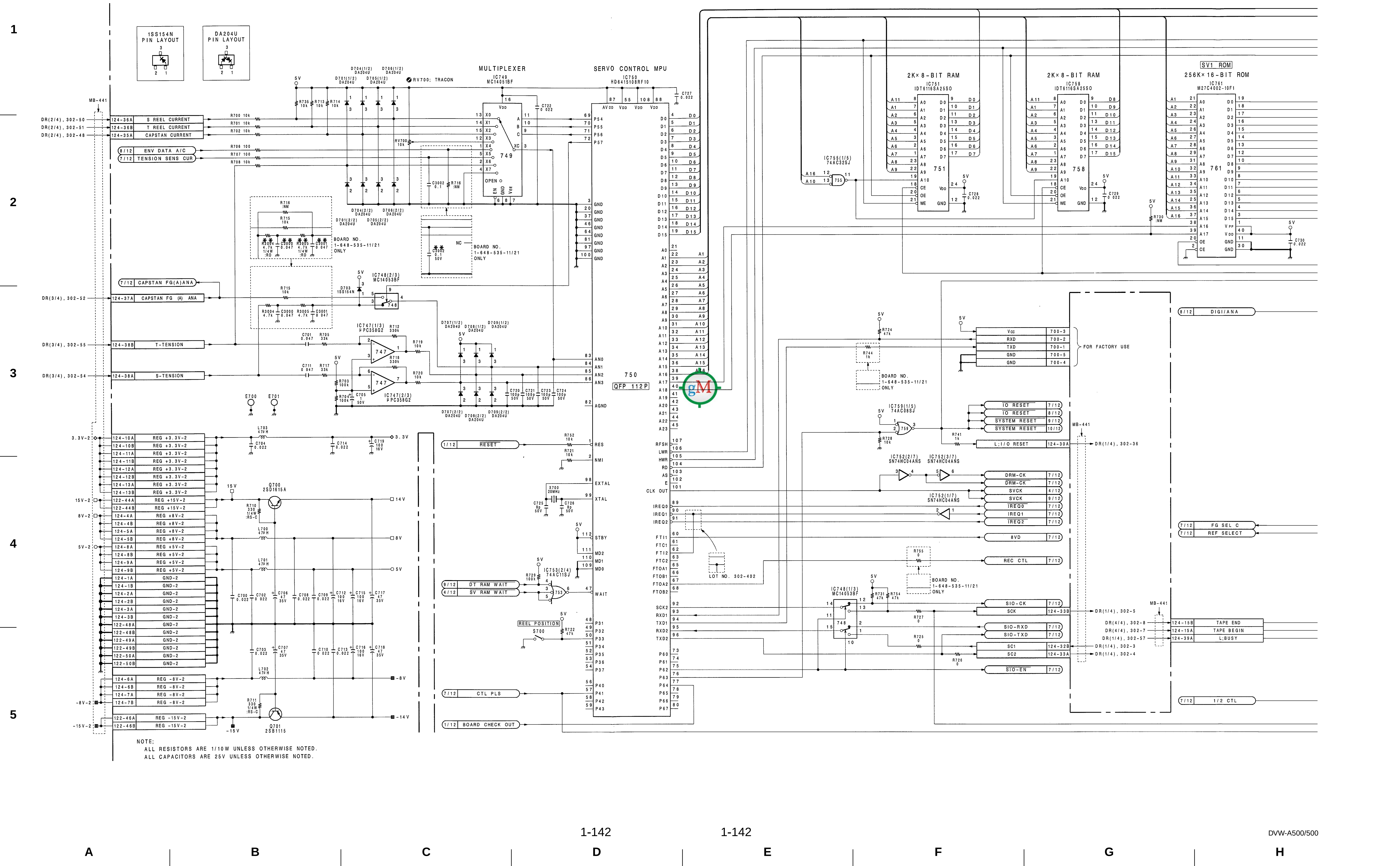
MULTIPLEXER
IC749
MC14051BF
SERVO CONTROL MPU
IC750
HD6415108RF10
2K× 8-BIT RAM
IC751
IDT6116SA25SO
2K× 8-BIT RAM
IC758
IDT6116SA25SO
SV1 ROM
256K× 16-BIT ROM
IC761
M27C4002-10F1
1SS154N PIN LAYOUT
DA204U PIN LAYOUT
FOR FACTORY USE
NOTE;
ALL RESISTORS ARE 1/10W UNLESS OTHERWISE NOTED.
ALL CAPACITORS ARE 25V UNLESS OTHERWISE NOTED.

 SS-52A/52 (6/12)

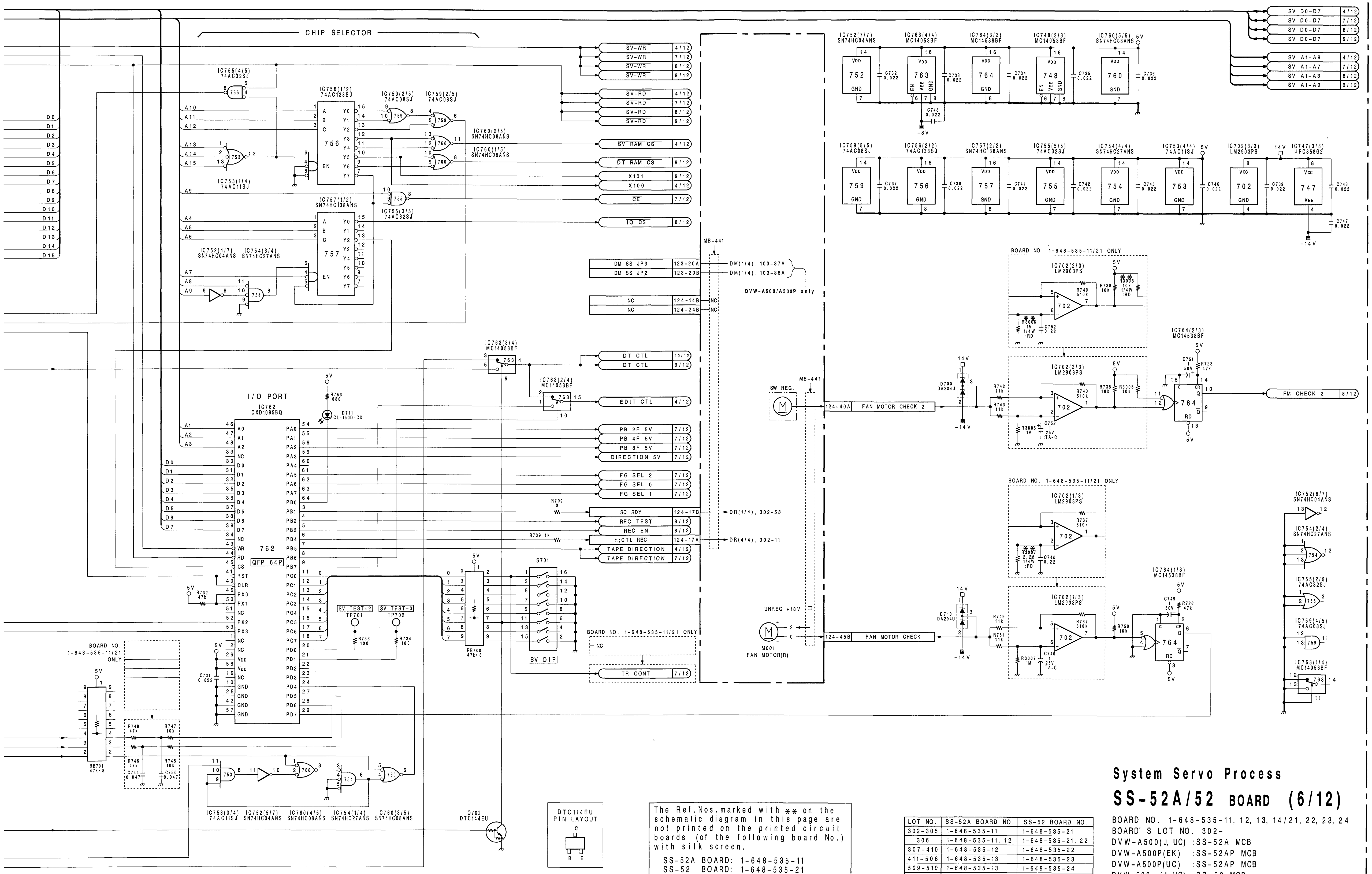

The Ref.Nos.marked with ** on the schematic diagram in this page are not printed on the printed circuit boards (of the following board No.) with silk screen.

SS-52A BOARD: 1-648-535-11
SS-52 BOARD: 1-648-535-21

LOT NO.	SS-52A BOARD NO.	SS-52 BOARD NO.
302-305	1-648-535-11	1-648-535-21
306	1-648-535-11, 12	1-648-535-21, 22
307-410	1-648-535-12	1-648-535-22
411-508	1-648-535-13	1-648-535-23
509-510	1-648-535-13	1-648-535-24
511-	1-648-535-14	1-648-535-24

System Servo Process
SS-52A/52 BOARD (6/12)

BOARD NO. 1-648-535-11, 12, 13, 14/21, 22, 23, 24
BOARD' S LOT NO. 302-
DVW-A500(J, UC) :SS-52A MCB
DVW-A500P(EK) :SS-52AP MCB
DVW-A500P(UC) :SS-52AP MCB
DVW-500 (J, UC) :SS-52 MCB
DVW-500P (EK) :SS-52P MCB
DVW-500P (UC) :SS-52P MCB

DVW-SS52-ALL-REC-S/M-05

SS-52A/52 (7/12)

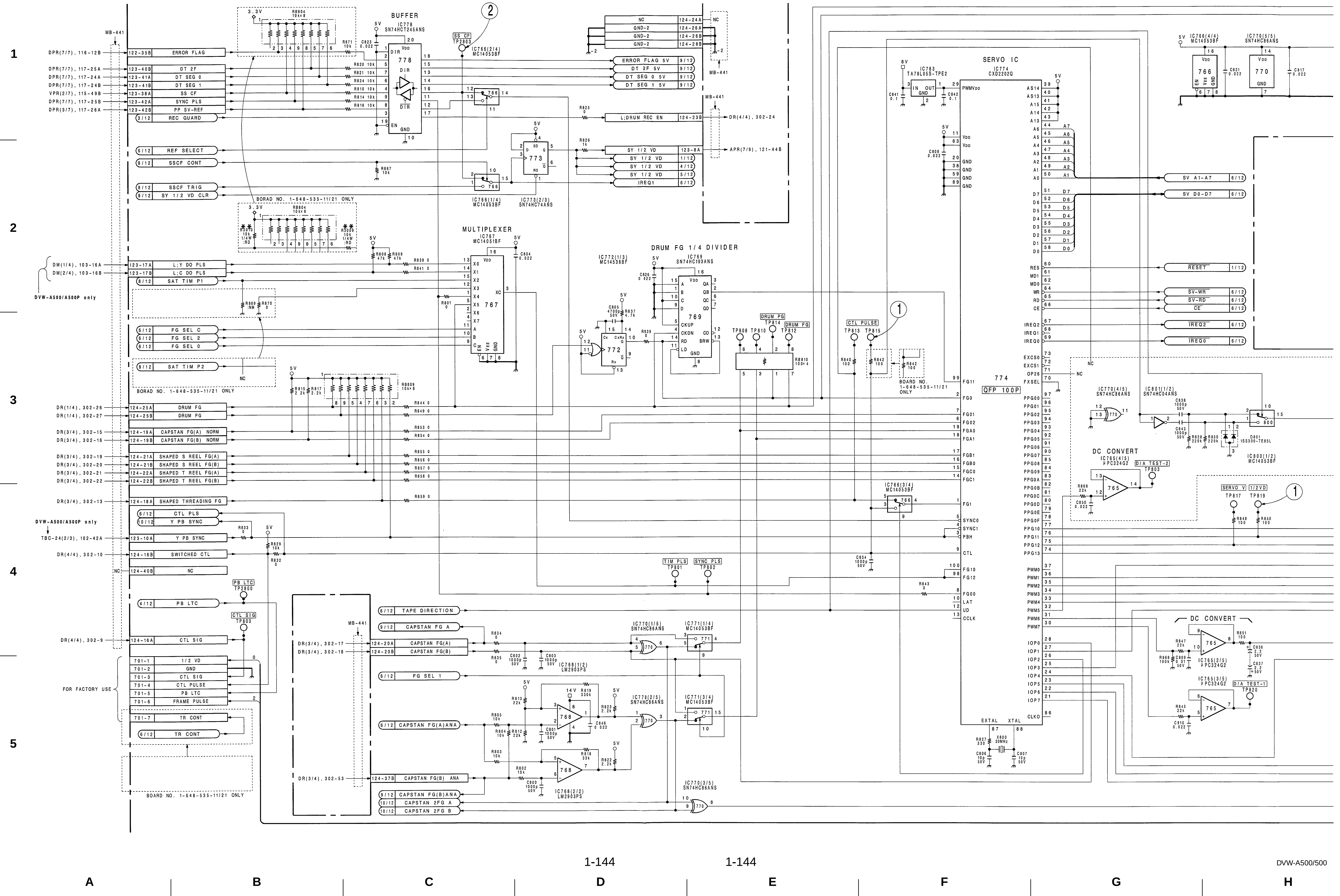

1-144

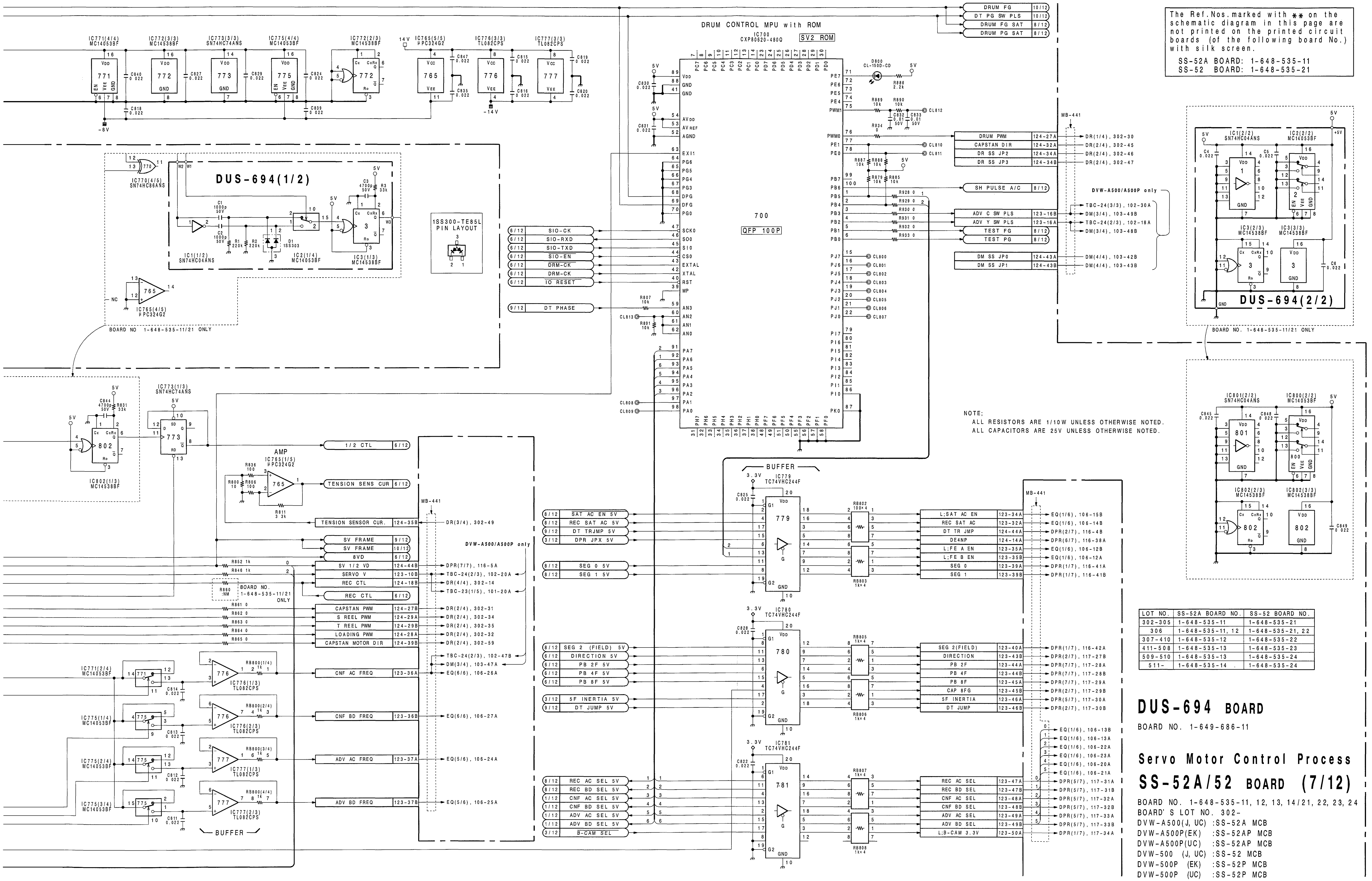

The Ref.Nos.marked with ** on the schematic diagram in this page are not printed on the printed circuit boards (of the following board No.) with silk screen.

SS-52A BOARD: 1-648-535-11
SS-52 BOARD: 1-648-535-21

NOTE:
ALL RESISTORS ARE 1/10W UNLESS OTHERWISE NOTED.
ALL CAPACITORS ARE 25V UNLESS OTHERWISE NOTED.

LOT NO.	SS-52A BOARD NO.	SS-52 BOARD NO.
302-305	1-648-535-11	1-648-535-21
306	1-648-535-11, 12	1-648-535-21, 22
307-410	1-648-535-12	1-648-535-22
411-508	1-648-535-13	1-648-535-23
509-510	1-648-535-13	1-648-535-24
511-	1-648-535-14	1-648-535-24

DUS-694 BOARD

BOARD NO. 1-649-686-11

Servo Motor Control Process

SS-52A/52 BOARD (7/12)

BOARD NO. 1-648-535-11, 12, 13, 14/21, 22, 23, 24
BOARD' S LOT NO. 302-
DVW-A500(J, UC) :SS-52A MCB
DVW-A500P(EK) :SS-52AP MCB
DVW-A500P(UC) :SS-52AP MCB
DVW-500 (J, UC) :SS-52 MCB
DVW-500P (EK) :SS-52P MCB
DVW-500P (UC) :SS-52P MCB

DVW-SS52-ALL-REC-S/M-05

I J K L M N O P

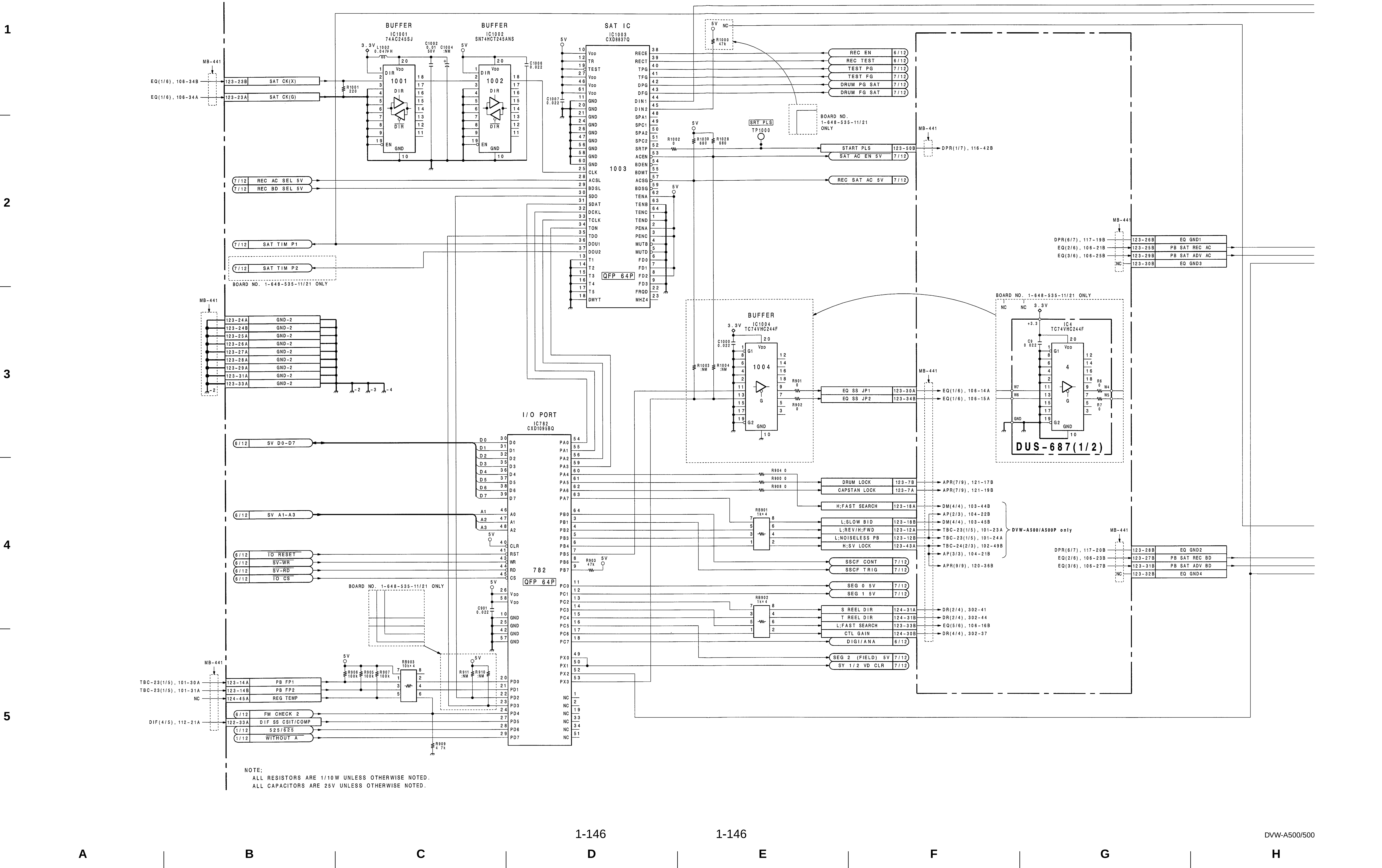
BUFFER
IC1001
74AC245SJ
BUFFER
IC1002
SN74HCT245ANS
SAT IC
IC1003
CXD8837Q
I/O PORT
IC782
CXD1095BQ
BUFFER
IC1004
TC74VHC244F
DUS-687(1/2)
BOARD NO. 1-648-535-11/21 ONLY
DVW-A500/A500P only
NOTE;
ALL RESISTORS ARE 1/10W UNLESS OTHERWISE NOTED.
ALL CAPACITORS ARE 25V UNLESS OTHERWISE NOTED.

http://getMANUAL.com
 SS-52A/52 (8/12)

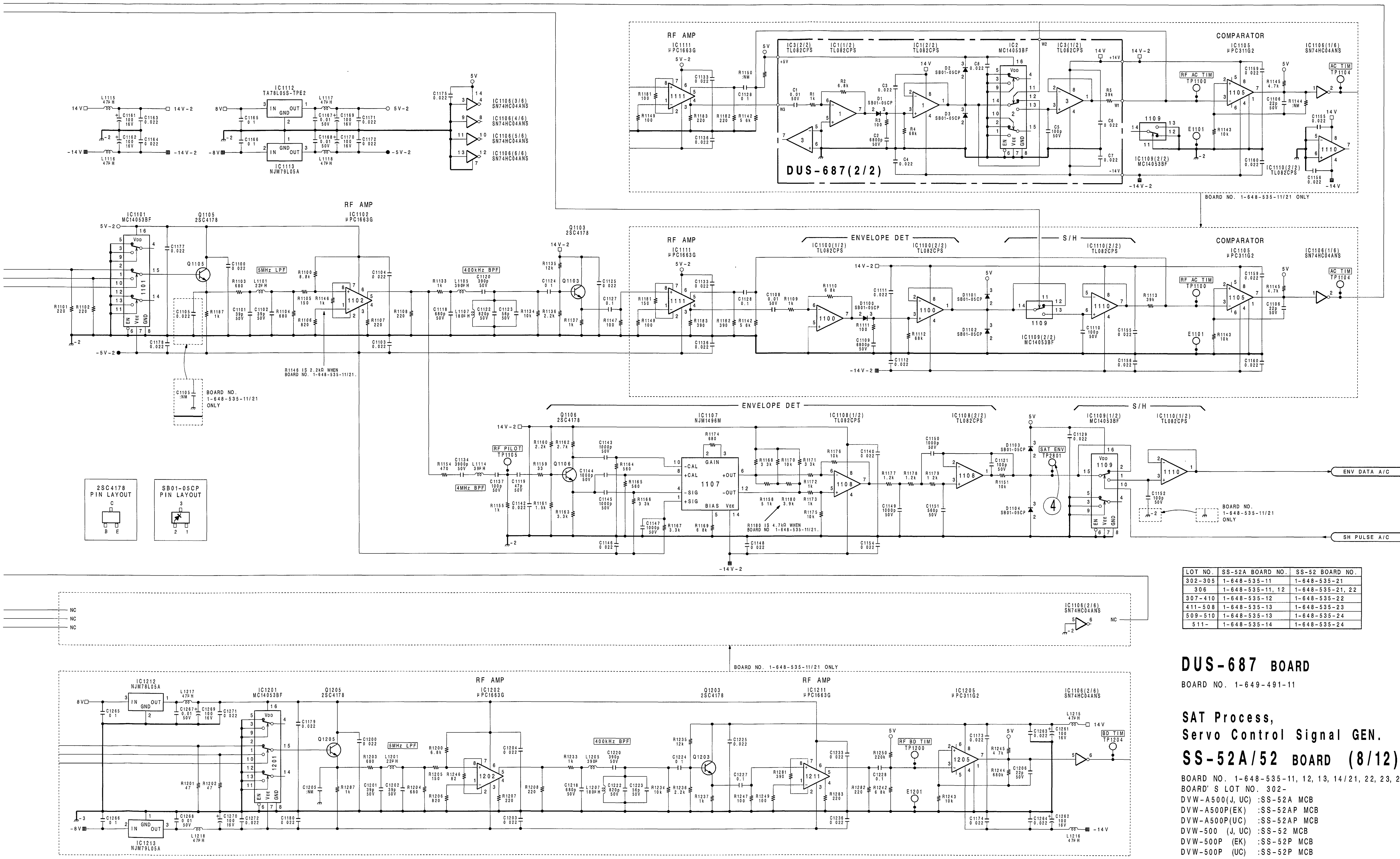

LOT NO.	SS-52A BOARD NO.	SS-52 BOARD NO.
302-305	1-648-535-11	1-648-535-21
306	1-648-535-11, 12	1-648-535-21, 22
307-410	1-648-535-12	1-648-535-22
411-508	1-648-535-13	1-648-535-23
509-510	1-648-535-13	1-648-535-24
511-	1-648-535-14	1-648-535-24

DUS-687 BOARD

BOARD NO. 1-649-491-11

SAT Process, Servo Control Signal GEN.

SS-52A/52 BOARD (8/12)

BOARD NO. 1-648-535-11, 12, 13, 14/21, 22, 23, 24
BOARD' S LOT NO. 302-
DVW-A500(J, UC) :SS-52A MCB
DVW-A500P(EK) :SS-52AP MCB
DVW-A500P(UC) :SS-52AP MCB
DVW-500 (J, UC) :SS-52 MCB
DVW-500P (EK) :SS-52P MCB
DVW-500P (UC) :SS-52P MCB

DVW-SS52-ALL-REC-S/M-05

1 2 3 4 5

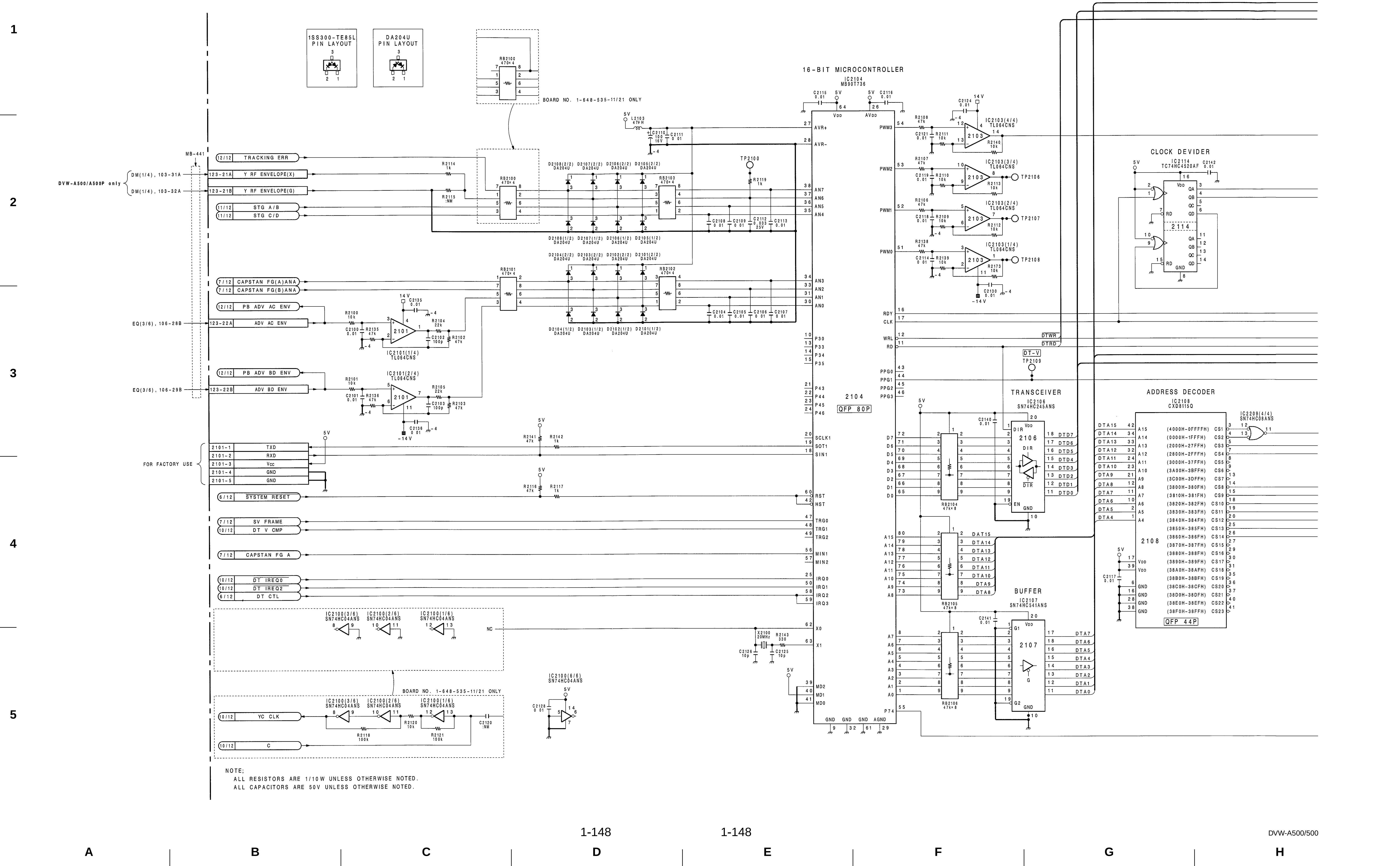

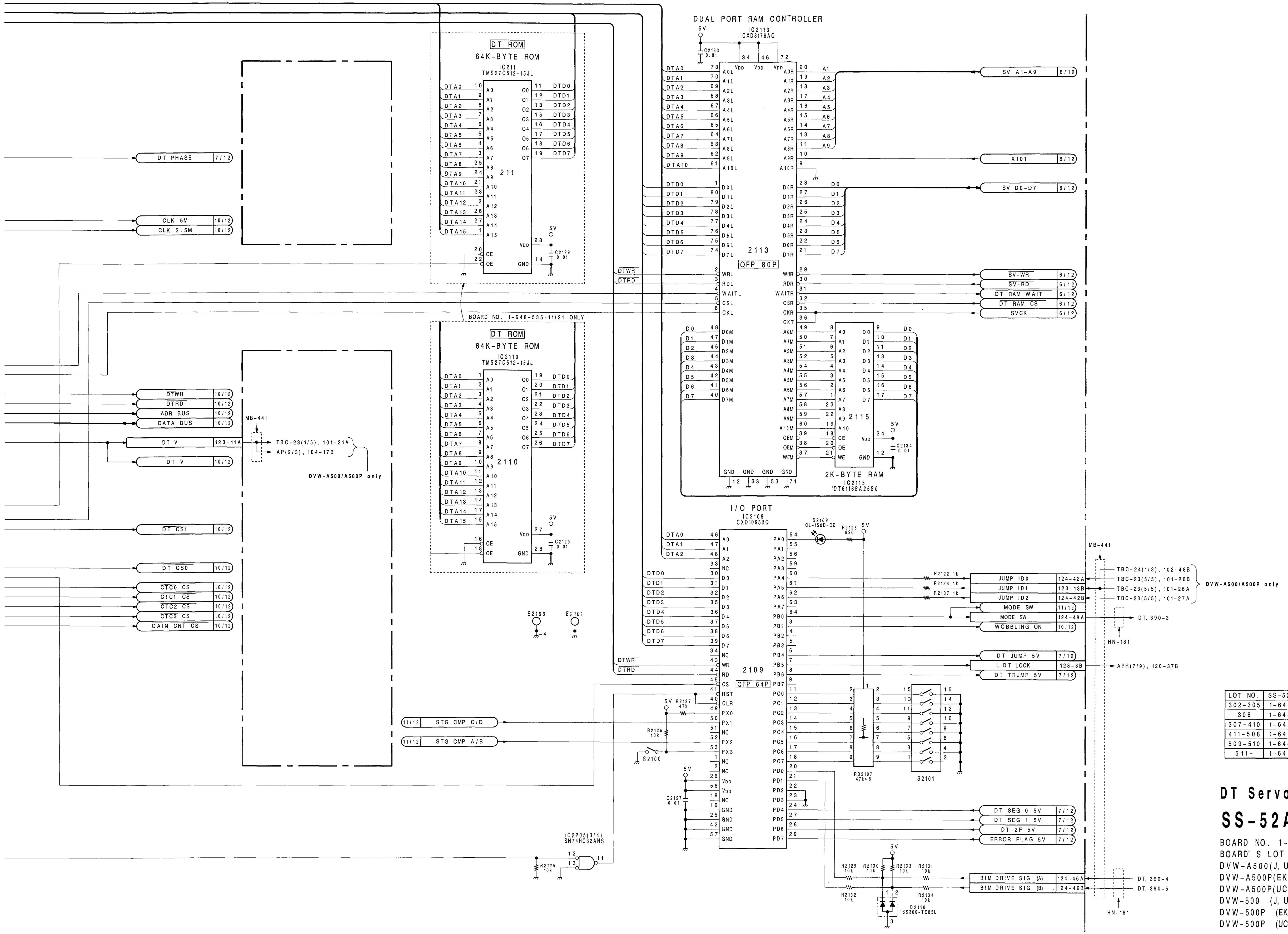

LOT NO.	SS-52A BOARD NO.	SS-52 BOARD NO.
302-305	1-648-535-11	1-648-535-21
306	1-648-535-11, 12	1-648-535-21, 22
307-410	1-648-535-12	1-648-535-22
411-508	1-648-535-13	1-648-535-23
509-510	1-648-535-13	1-648-535-24
511-	1-648-535-14	1-648-535-24

DT Servo Process Control

SS-52A/52 BOARD (9/12)

BOARD NO. 1-648-535-11, 12, 13, 14/21, 22, 23, 24
BOARD' S LOT NO. 302-
DVW-A500(J, UC) :SS-52A MCB
DVW-A500P(EK) :SS-52AP MCB
DVW-A500P(UC) :SS-52AP MCB
DVW-500 (J, UC) :SS-52 MCB
DVW-500P (EK) :SS-52P MCB
DVW-500P (UC) :SS-52P MCB

DVW-SS52-ALL-REC-S/M-05

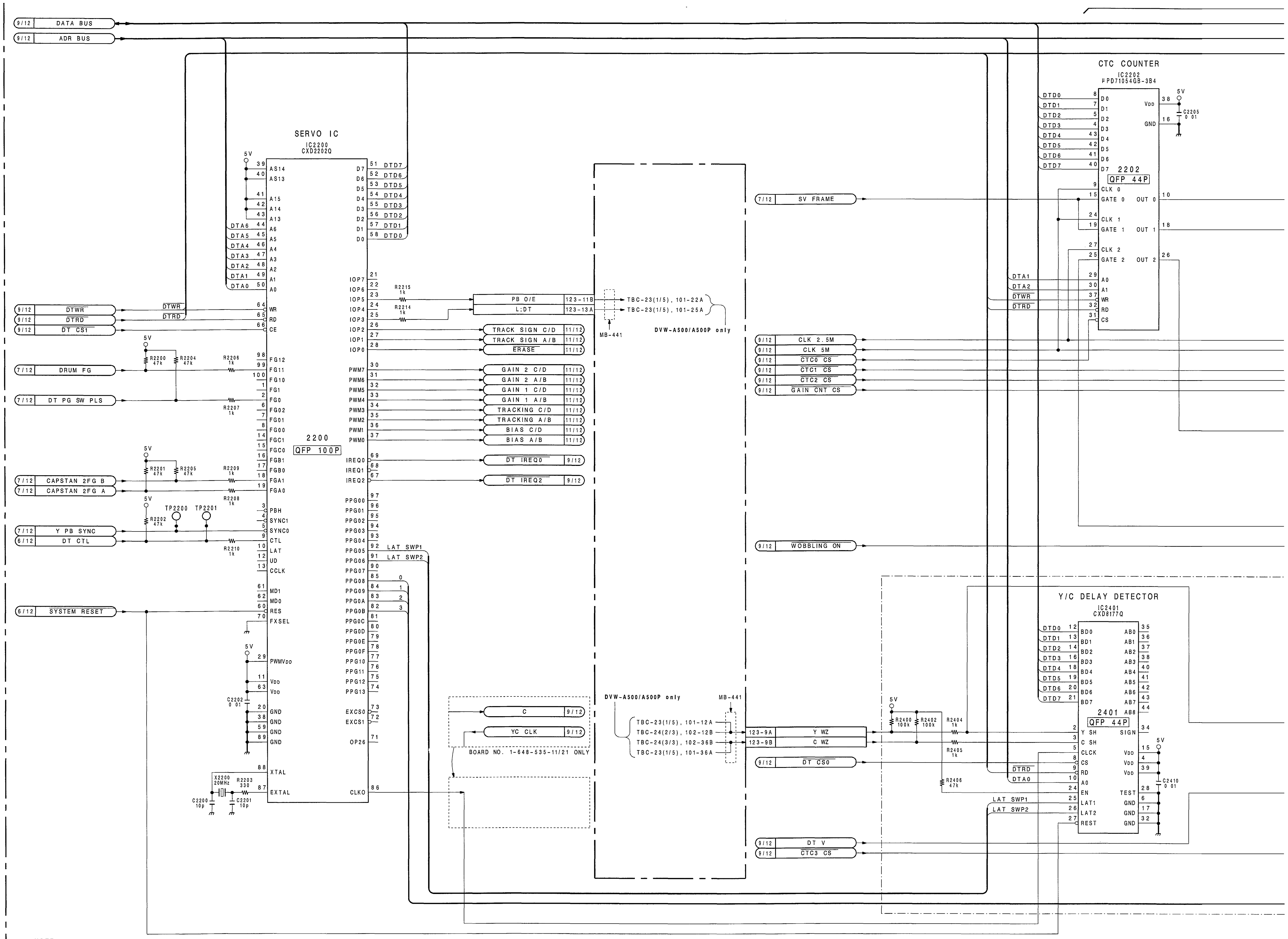

NOTE;
ALL RESISTORS ARE 1/10W UNLESS OTHERWISE NOTED.
ALL CAPACITORS ARE 50V UNLESS OTHERWISE NOTED.

1 2 3 4 5

A B C D E F G H

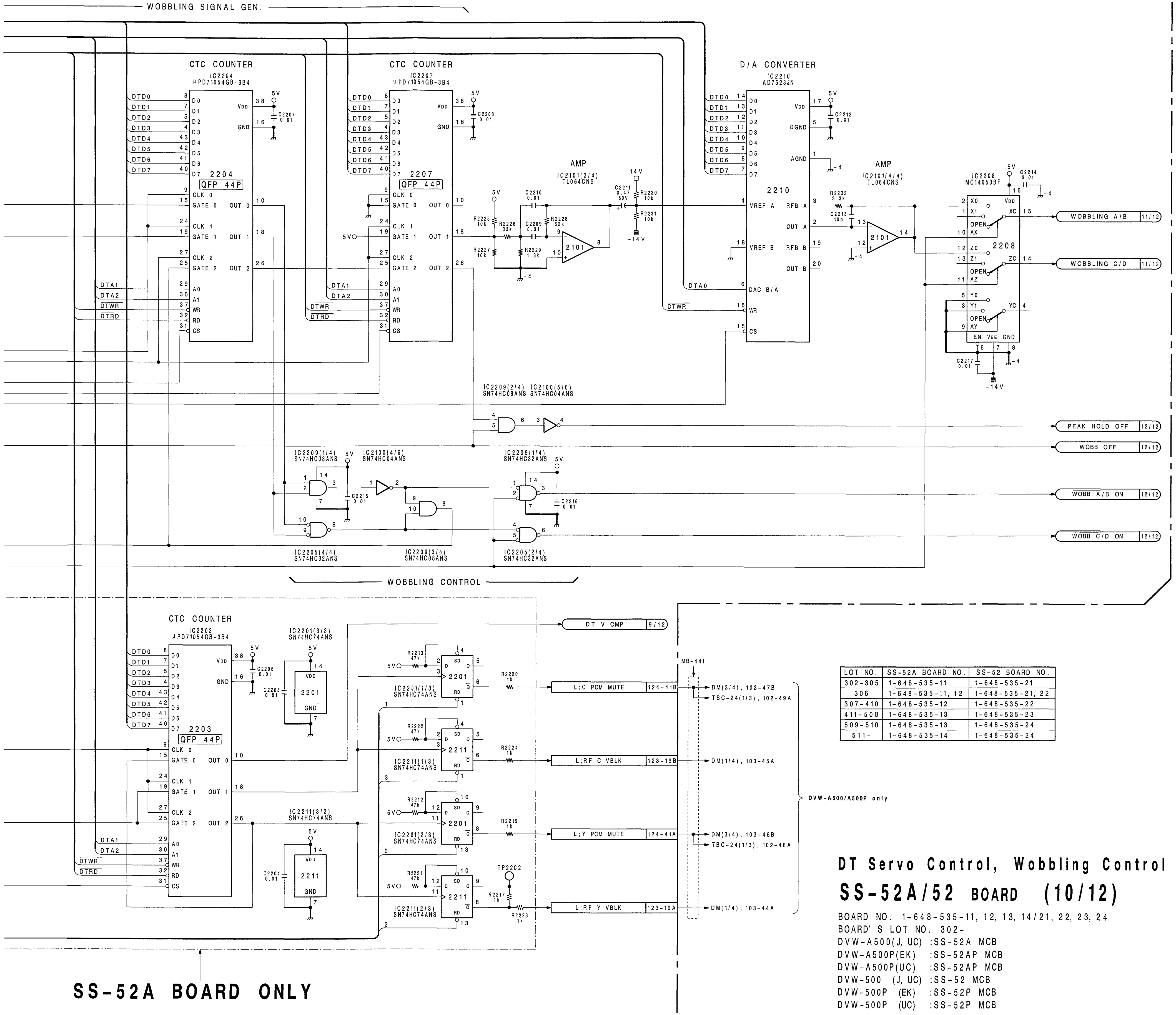

LOT NO.	SS-52A BOARD NO.	SS-52 BOARD NO.
302-305	1-648-535-11	1-648-535-21
306	1-648-535-11, 12	1-648-535-21, 22
307-410	1-648-535-12	1-648-535-22
411-508	1-648-535-13	1-648-535-23
509-510	1-648-535-13	1-648-535-24
511-	1-648-535-14	1-648-535-24

DT Servo Control, Wobbling Control

SS-52A/52 BOARD (10/12)

BOARD NO. 1-648-535-11, 12, 13, 14/21, 22, 23, 24
BOARD' S LOT NO. 302-
DVW-A500(J, UC) :SS-52A MCB
DVW-A500P(EK) :SS-52AP MCB
DVW-A500P(UC) :SS-52AP MCB
DVW-500 (J, UC) :SS-52 MCB
DVW-500P (EK) :SS-52P MCB
DVW-500P (UC) :SS-52P MCB

DVW-SS52-ALL-REC-S/M-05

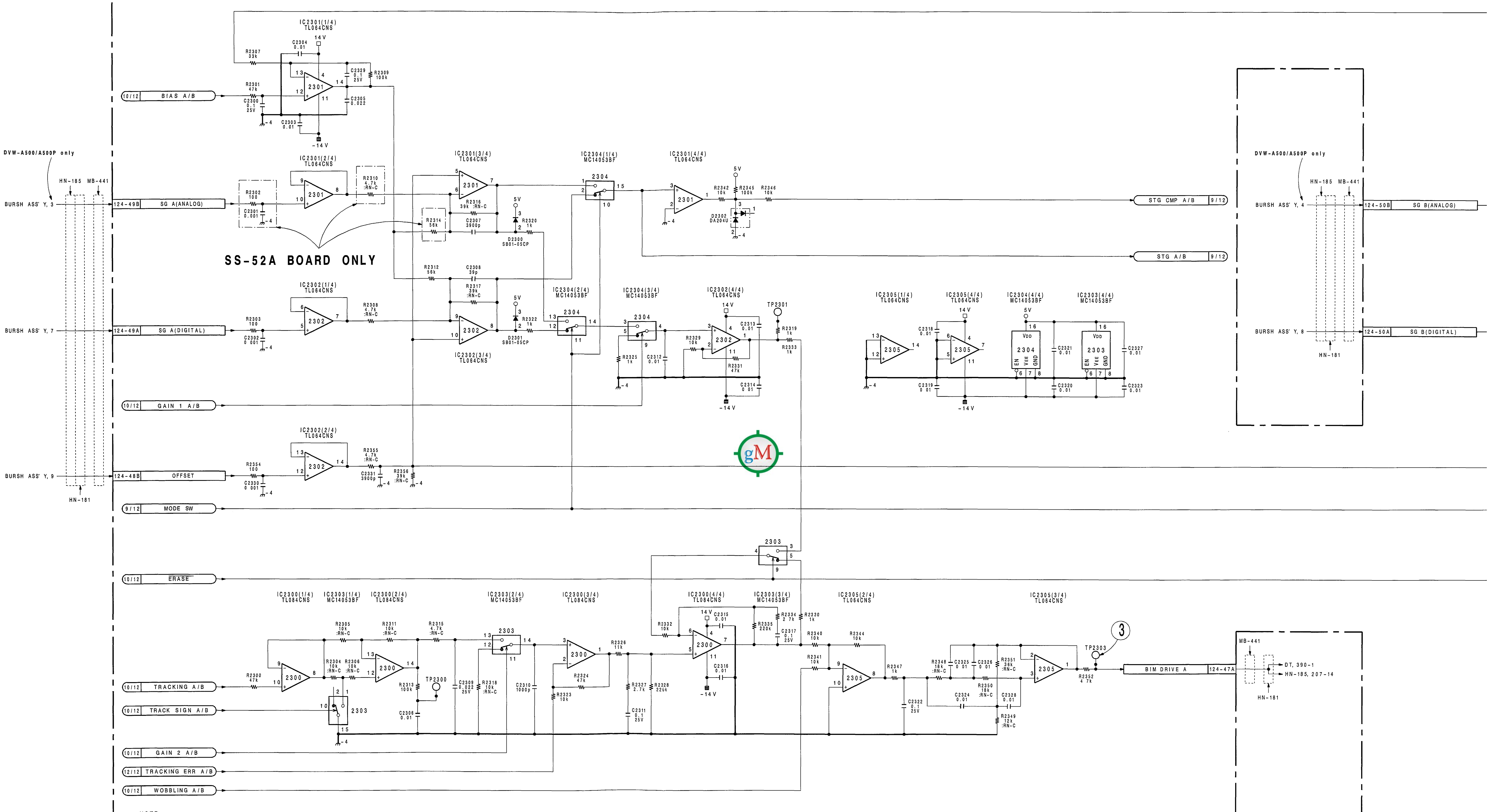

NOTE;
ALL RESISTORS ARE 1/10W UNLESS OTHERWISE NOTED.
ALL CAPACITORS ARE 50V UNLESS OTHERWISE NOTED.

 SS-52A/52 (11/12)

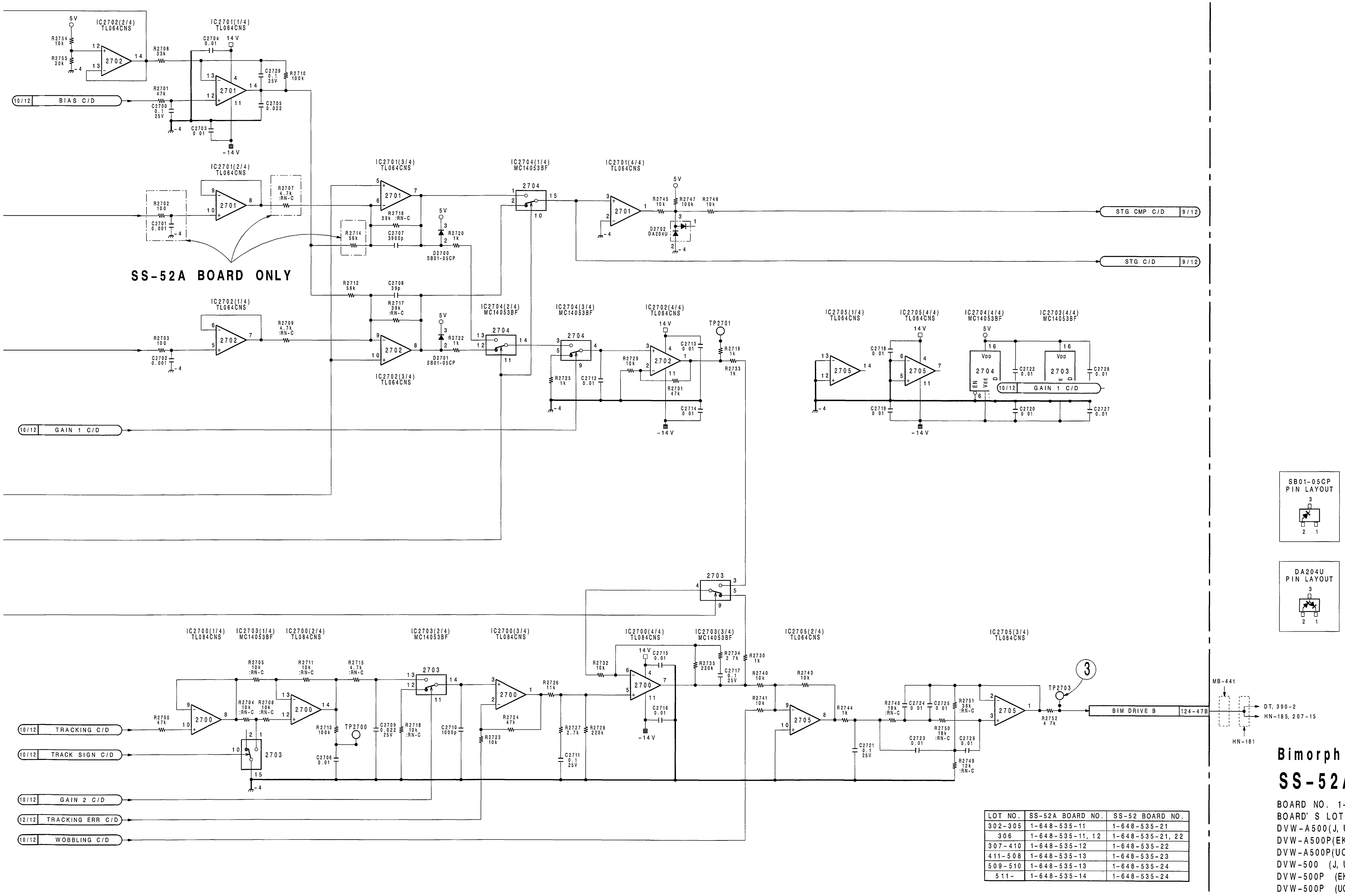

LOT NO.	SS-52A BOARD NO.	SS-52 BOARD NO.
302-305	1-648-535-11	1-648-535-21
306	1-648-535-11, 12	1-648-535-21, 22
307-410	1-648-535-12	1-648-535-22
411-508	1-648-535-13	1-648-535-23
509-510	1-648-535-13	1-648-535-24
511-	1-648-535-14	1-648-535-24

Bimorph Drive Control

SS-52A/52 BOARD (11/12)

BOARD NO. 1-648-535-11, 12, 13, 14/21, 22, 23, 24
BOARD' S LOT NO. 302-
DVW-A500(J, UC) :SS-52A MCB
DVW-A500P(EK) :SS-52AP MCB
DVW-A500P(UC) :SS-52AP MCB
DVW-500 (J, UC) :SS-52 MCB
DVW-500P (EK) :SS-52P MCB
DVW-500P (UC) :SS-52P MCB

DVW-SS52-ALL-REC-S/M-05

1 2 3 4 5

 1-153

I J K L M N O P

SS-52A/52 (12/12)

The Ref.Nos.marked with ** on the schematic diagram in this page are not printed on the printed circuit boards (of the following board No.) with silk screen.

SS-52A BOARD: 1-648-535-11
SS-52 BOARD: 1-648-535-21

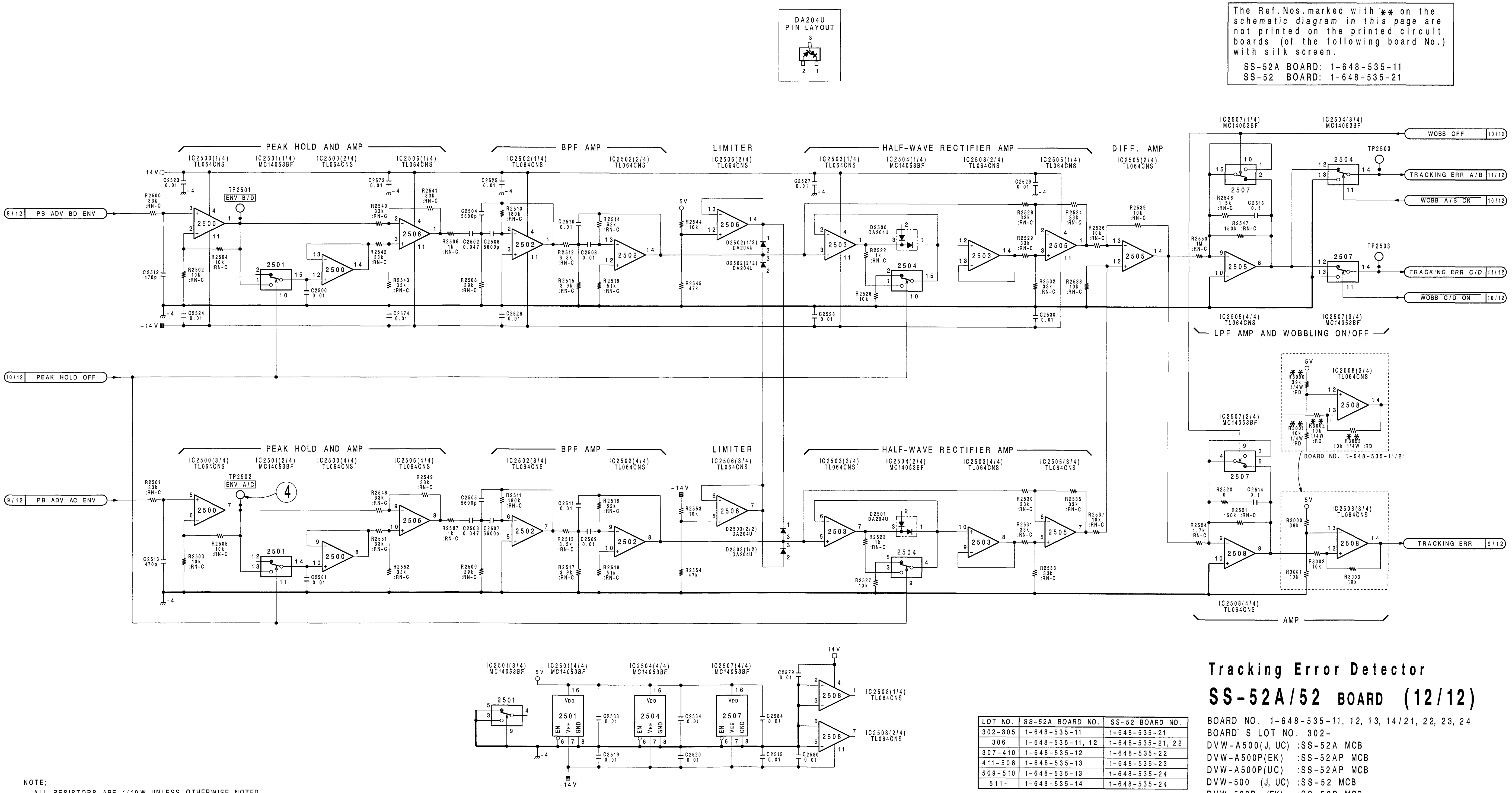

NOTE;
ALL RESISTORS ARE 1/10W UNLESS OTHERWISE NOTED.
ALL CAPACITORS ARE 50V UNLESS OTHERWISE NOTED.

LOT NO.	SS-52A BOARD NO.	SS-52 BOARD NO.
302-305	1-648-535-11	1-648-535-21
306	1-648-535-11, 12	1-648-535-21, 22
307-410	1-648-535-12	1-648-535-22
411-508	1-648-535-13	1-648-535-23
509-510	1-648-535-13	1-648-535-24
511-	1-648-535-14	1-648-535-24

Tracking Error Detector
SS-52A/52 BOARD (12/12)

BOARD NO. 1-648-535-11, 12, 13, 14/21, 22, 23, 24
BOARD' S LOT NO. 302-
DVW-A500(J, UC) :SS-52A MCB
DVW-A500P(EK) :SS-52AP MCB
DVW-A500P(UC) :SS-52AP MCB
DVW-500 (J, UC) :SS-52 MCB
DVW-500P (EK) :SS-52P MCB
DVW-500P (UC) :SS-52P MCB

DVW-SS52-ALL-REC-S/M-05

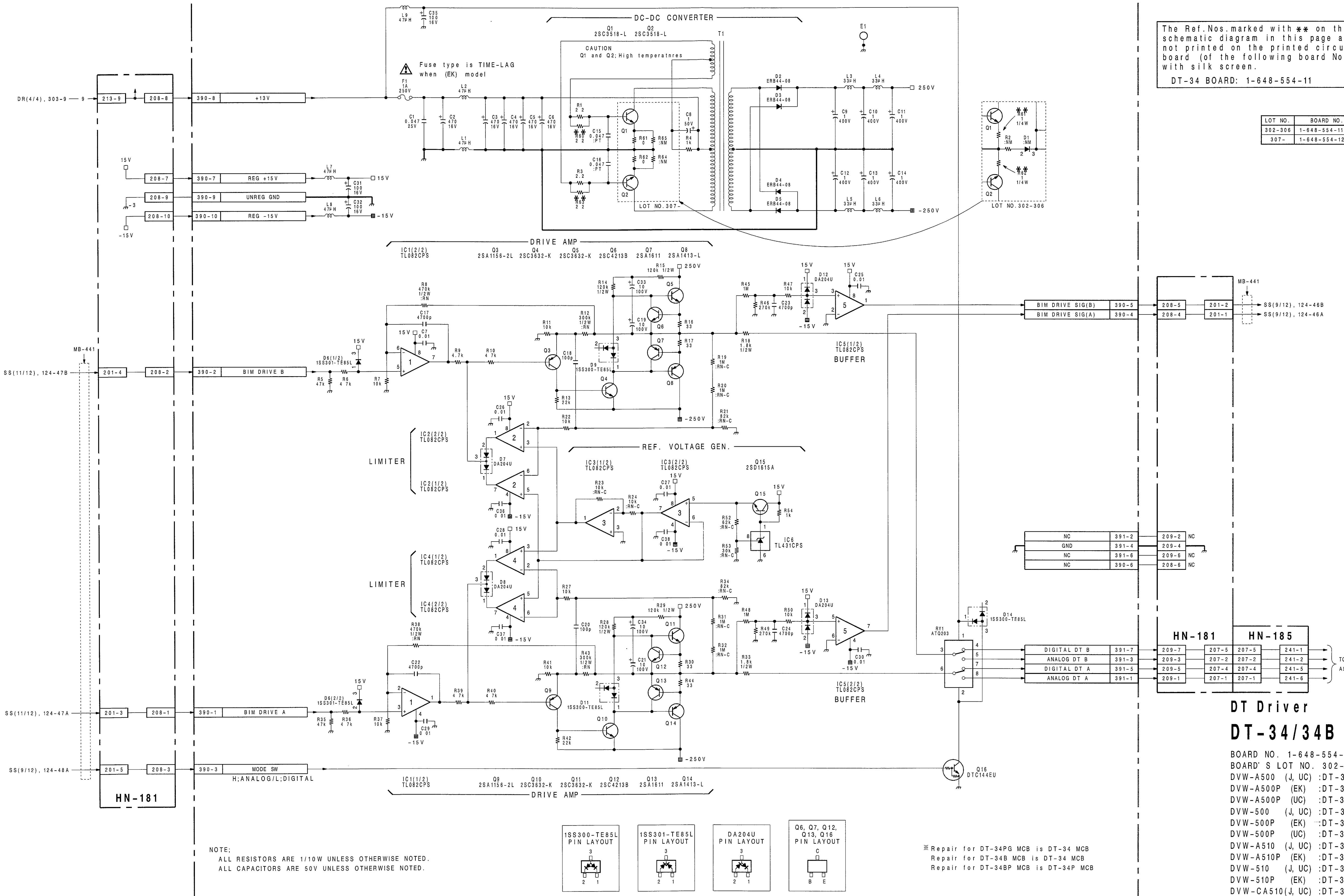

The Ref.Nos.marked with ** on the schematic diagram in this page are not printed on the printed circuit board (of the following board No.) with silk screen.

DT-34 BOARD: 1-648-554-11

LOT NO.	BOARD NO.
302-306	1-648-554-11
307-	1-648-554-12/22

NOTE;
ALL RESISTORS ARE 1/10W UNLESS OTHERWISE NOTED.
ALL CAPACITORS ARE 50V UNLESS OTHERWISE NOTED.

※Repair for DT-34PG MCB is DT-34 MCB
Repair for DT-34B MCB is DT-34 MCB
Repair for DT-34BP MCB is DT-34P MCB

DT Driver
DT-34/34B BOARD

BOARD NO. 1-648-554-11, 12/22
BOARD'S LOT NO. 302-
DVW-A500 (J, UC) :DT-34 MCB
DVW-A500P (EK) :DT-34P MCB
DVW-A500P (UC) :DT-34PG MCB
DVW-500 (J, UC) :DT-34 MCB
DVW-500P (EK) :DT-34P MCB
DVW-500P (UC) :DT-34PG MCB
DVW-A510 (J, UC) :DT-34B MCB
DVW-A510P (EK) :DT-34BP MCB
DVW-510 (J, UC) :DT-34B MCB
DVW-510P (EK) :DT-34BP MCB
DVW-CA510(J, UC) :DT-34B MCB
DVW-CA510P(EK) :DT-34BP MCB

DVW-DT34-ALL-ALL-S/M-04

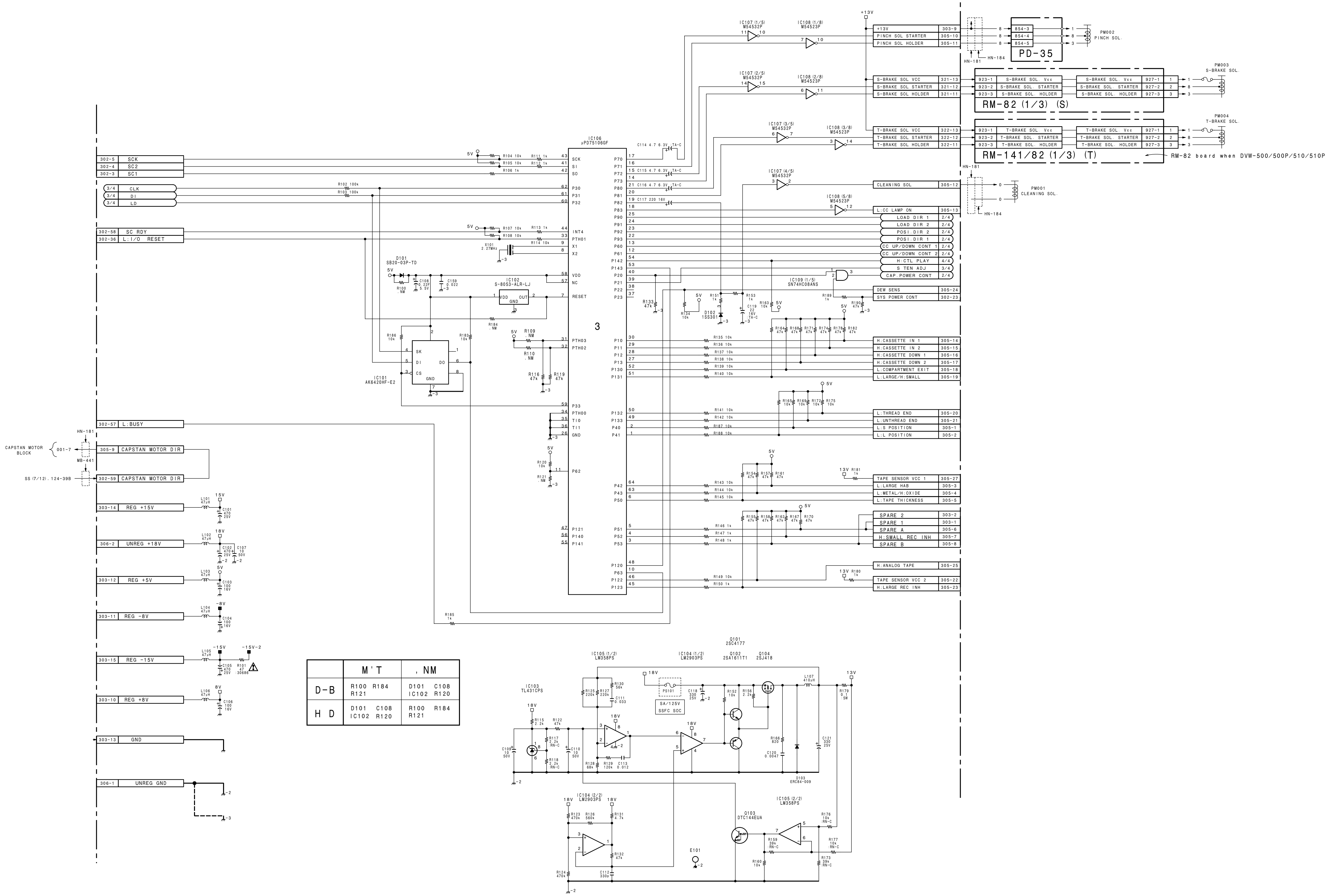

	M'T	,NM
D-B	R100 R184 R121	D101 C108 IC102 R120
H D	D101 C108 IC102 R120	R100 R184 R121

http://getMANUAL.com

DR-307 (1/4), RM-82/141 (1/3)

1
2
3
4
5

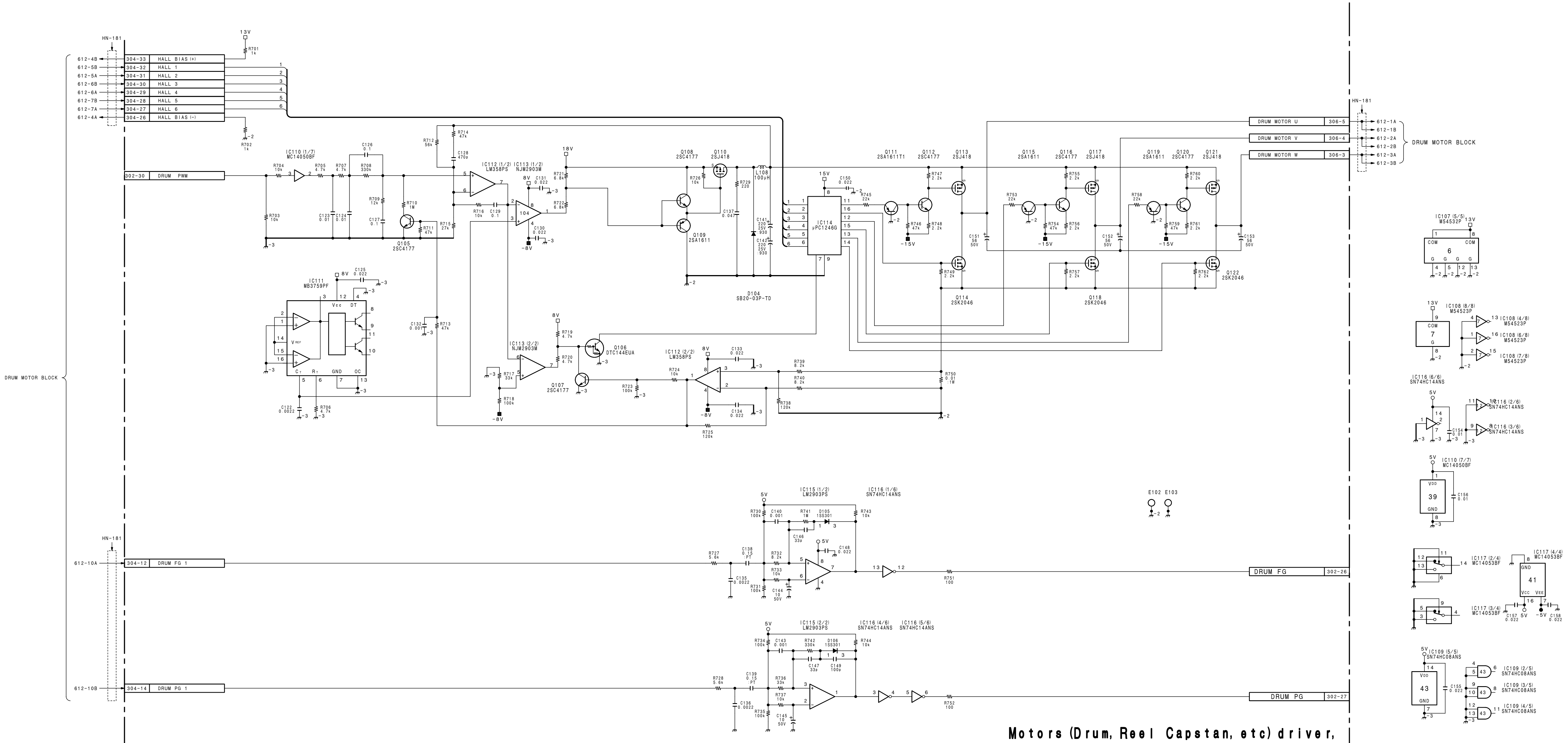

Motors (Drum, Reel Capstan, etc) driver,

Solenoids driver

DR-307 BOARD (1/4)

BOARD NO. 1-664-481-12
BOARD'S LOT NO. 912-
DVW-A500 (J, UC) : DR-307 MCB
DVW-A500P (EK) : DR-307 MCB
DVW-A500P (UC) : DR-307 MCB
DVW-500 (J, UC) : DR-307 MCB
DVW-500P (EK) : DR-307 MCB
DVW-500P (UC) : DR-307 MCB
DVW-A510 (J, UC) : DR-307 MCB
DVW-A510P (EK) : DR-307 MCB
DVW-510 (J, UC) : DR-307 MCB
DVW-510P (EK) : DR-307 MCB
DVW-CA510 (J, UC) : DR-307 MCB
DVW-CA510P (EK) : DR-307 MCB

S/T Brake Sol. Connection

RM-82 BOARD (1/3)

BOARD NO. 1-640-166-13

T Brake Sol. Connection

RM-141 BOARD (1/3)

BOARD NO. 1-651-533-12

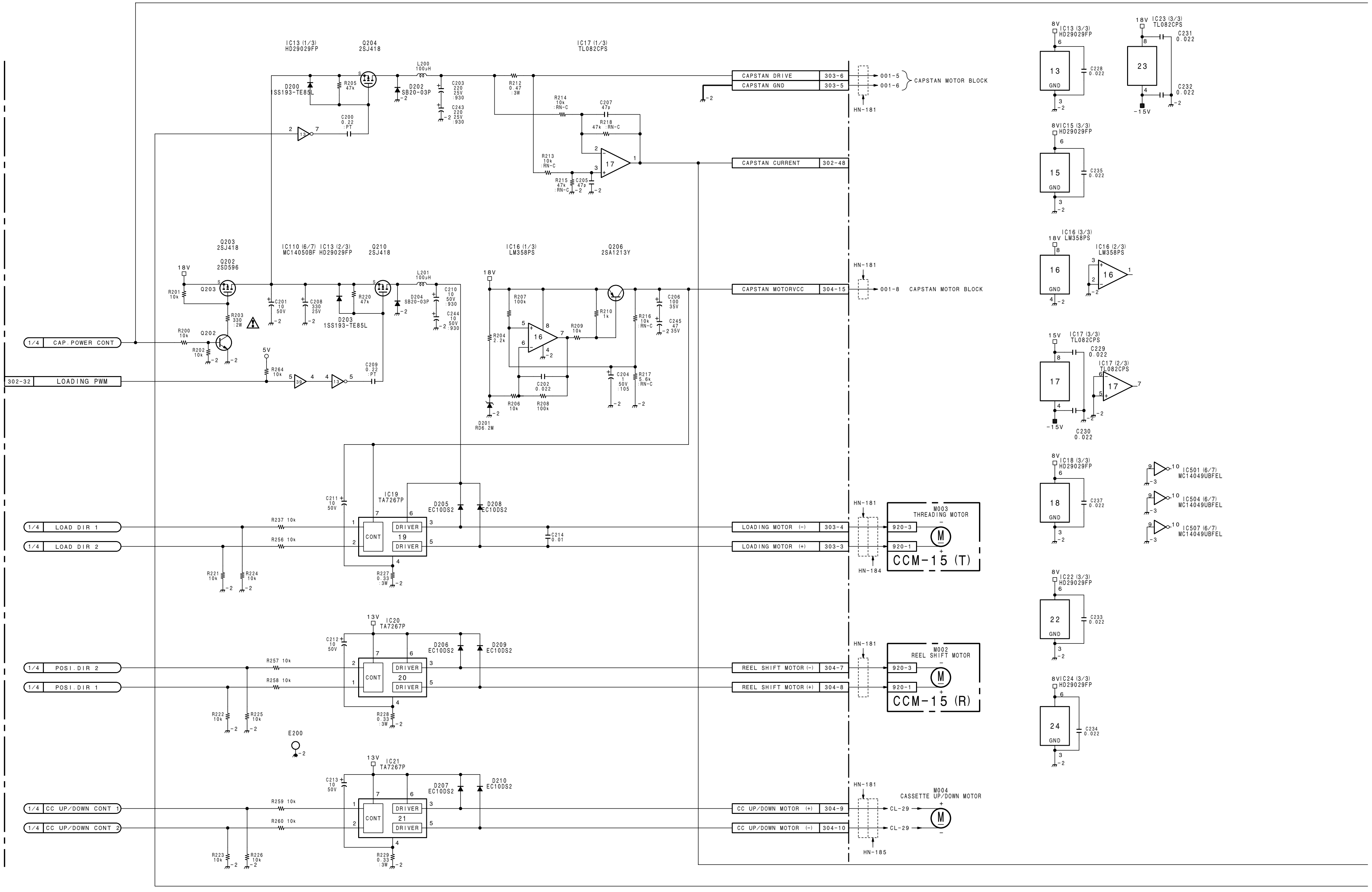
1
2
3
4
5
CAP.POWER CONT
LOADING PWM
LOAD DIR 1
LOAD DIR 2
POSI.DIR 2
POSI.DIR 1
CC UP/DOWN CONT 1
CC UP/DOWN CONT 2
CAPSTAN DRIVE
CAPSTAN GND
CAPSTAN CURRENT
CAPSTAN MOTORVCC
CAPSTAN MOTOR BLOCK
LOADING MOTOR (-)
LOADING MOTOR (+)
REEL SHIFT MOTOR (-)
REEL SHIFT MOTOR (+)
CC UP/DOWN MOTOR (+)
CC UP/DOWN MOTOR (-)
M003 THREADING MOTOR
CCM-15 (T)
M002 REEL SHIFT MOTOR
CCM-15 (R)
M004 CASSETTE UP/DOWN MOTOR
IC19 TA7267P
IC20 TA7267P
IC21 TA7267P
IC17 (1/3) TL082CPS
IC16 (1/3) LM358PS
IC13 (1/3) HD29029FP
E200

 DR-307 (2/4), RM-82/141 (2/3)

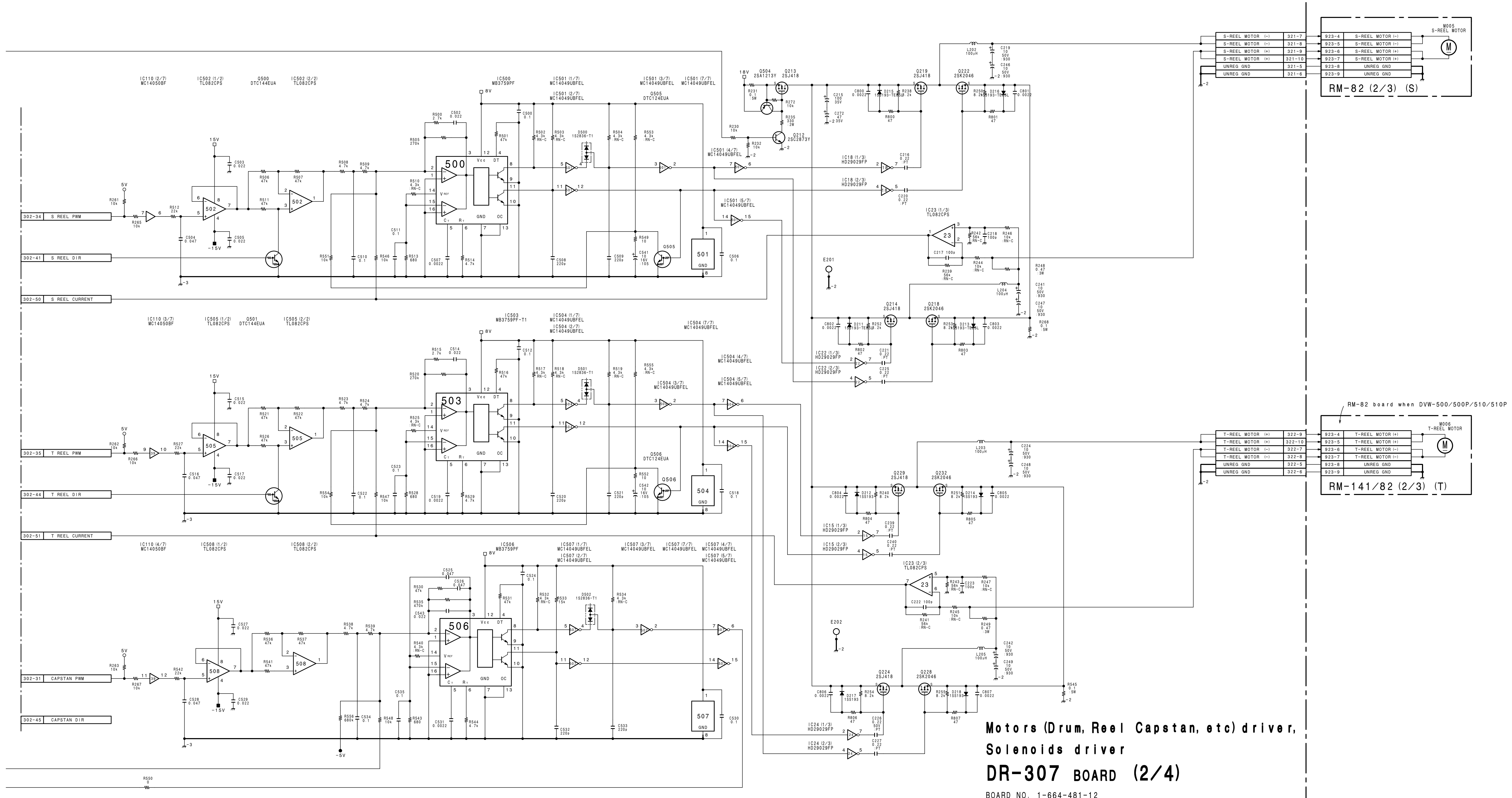

Motors (Drum, Reel Capstan, etc) driver,
Solenoids driver

DR-307 BOARD (2/4)

BOARD NO. 1-664-481-12
BOARD'S LOT NO. 912-
DVW-A500 (J, UC) : DR-307 MCB
DVW-A500P (EK) : DR-307 MCB
DVW-A500P (UC) : DR-307 MCB
DVW-500 (J, UC) : DR-307 MCB
DVW-500P (EK) : DR-307 MCB
DVW-500P (UC) : DR-307 MCB
DVW-A510 (J, UC) : DR-307 MCB
DVW-A510P (EK) : DR-307 MCB
DVW-510 (J, UC) : DR-307 MCB
DVW-510P (EK) : DR-307 MCB
DVW-CA510 (J, UC) : DR-307 MCB
DVW-CA510P (EK) : DR-307 MCB

S/T Reel Motor

RM-82 BOARD (2/3)

BOARD NO. 1-640-166-13

T Reel Motor

RM-141 BOARD (2/3)

BOARD NO. 1-651-533-12

DR-307 (3/4), RM-82/141 (3/3)

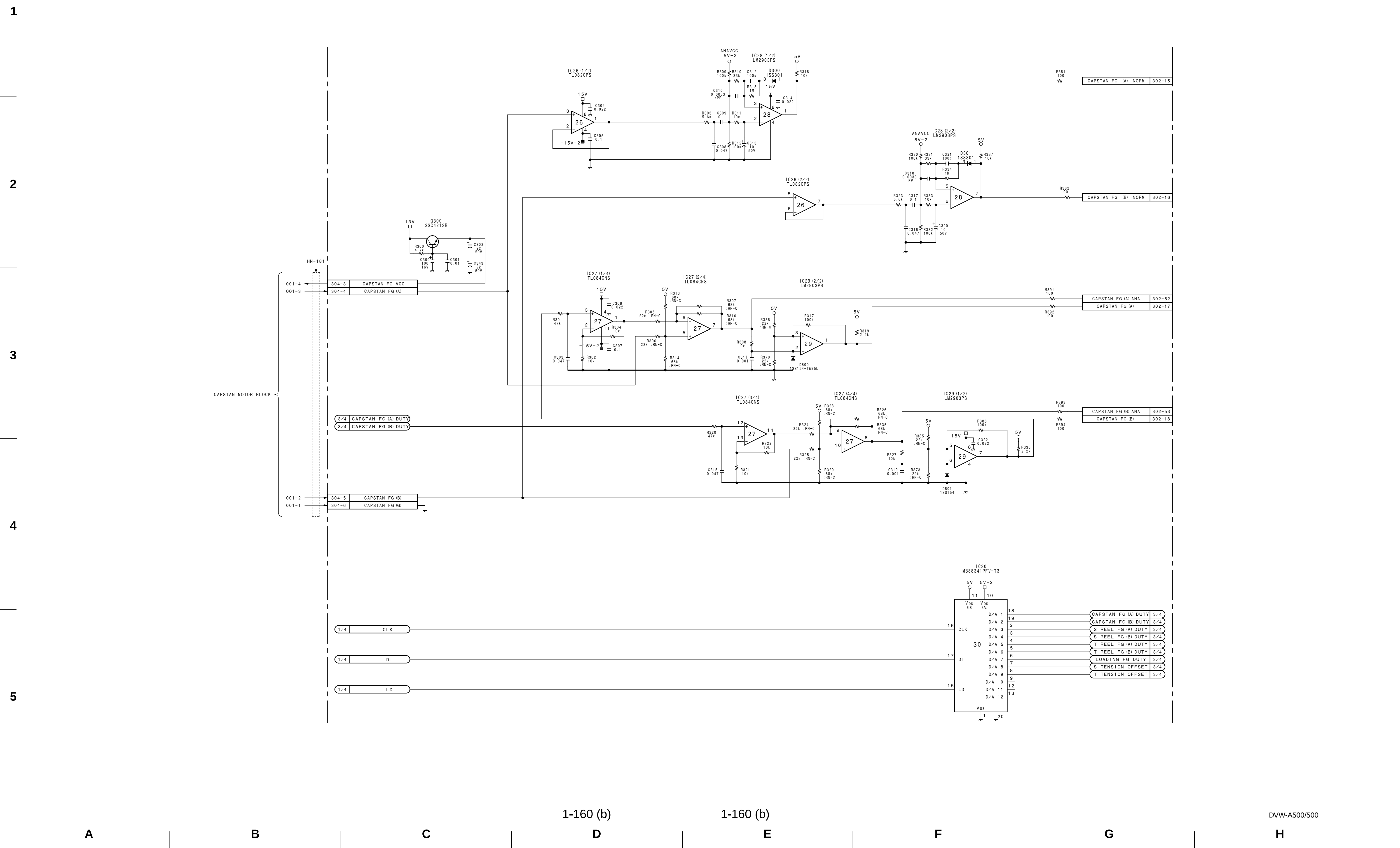

1-160 (b)

DR-307 (3/4), RM-82/141 (3/3)

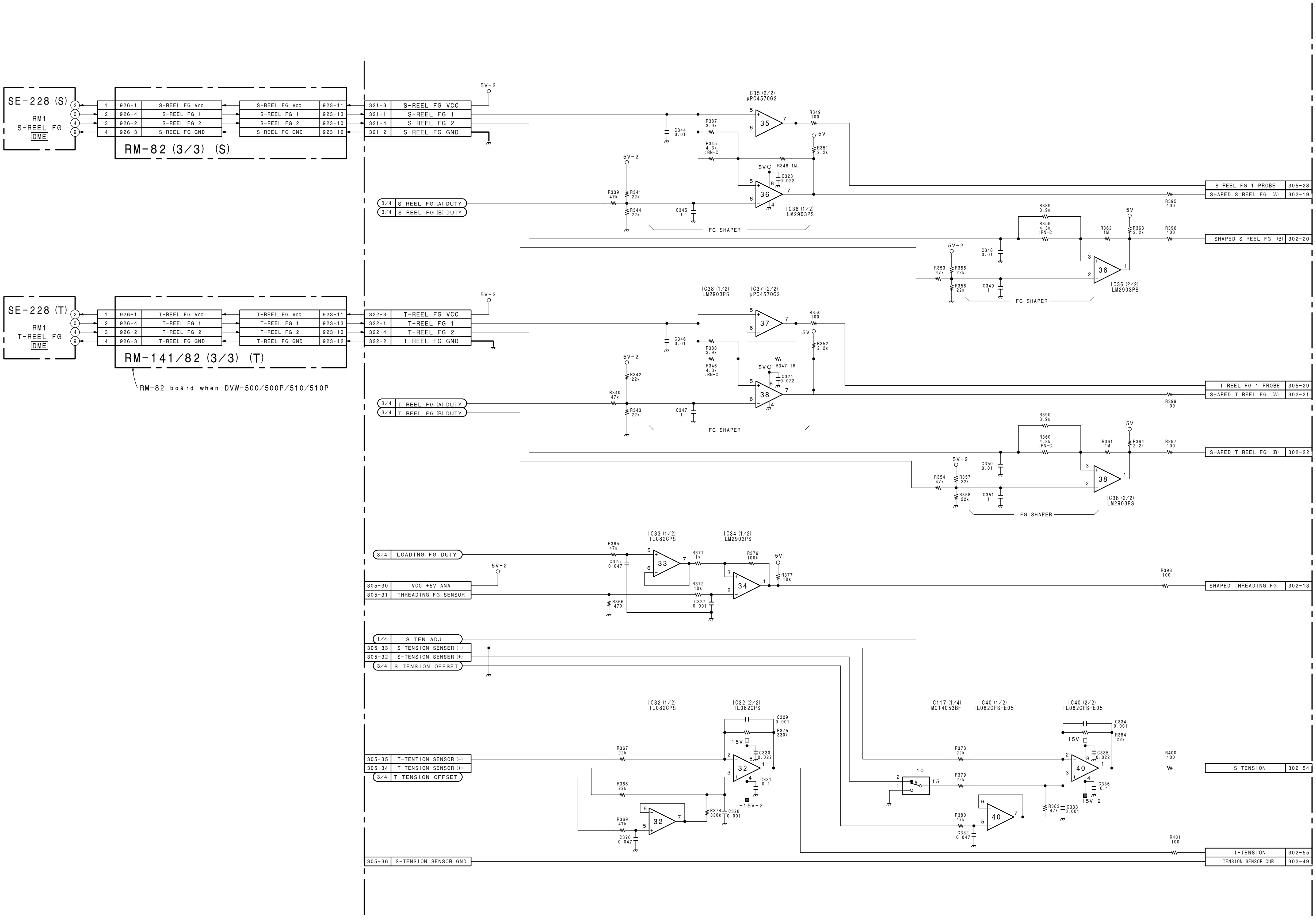

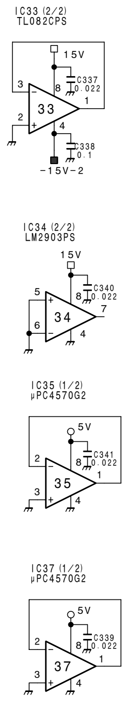

1

2

3

4

5

S/T Reel FG
SE-228 BOARD
BOARD NO. 1-649-617-11

S/T Reel FG Connection
RM-82 BOARD (3/3)
BOARD NO. 1-640-166-13

T Reel FG Connection
RM-141 BOARD (3/3)
BOARD NO. 1-651-533-12

Motors (Drum, Reel Capstan, etc) driver,
Solenoids driver
DR-307 BOARD (3/4)
BOARD NO. 1-664-481-12
BOARD'S LOT NO. 912-
DVW-A500 (J, UC) : DR-307 MCB
DVW-A500P (EK) : DR-307 MCB
DVW-A500P (UC) : DR-307 MCB
DVW-500 (J, UC) : DR-307 MCB
DVW-500P (EK) : DR-307 MCB
DVW-500P (UC) : DR-307 MCB
DVW-A510 (J, UC) : DR-307 MCB
DVW-A510P (EK) : DR-307 MCB
DVW-510 (J, UC) : DR-307 MCB
DVW-510P (EK) : DR-307 MCB
DVW-CA510 (J, UC) : DR-307 MCB
DVW-CA510P (EK) : DR-307 MCB

1-161 (b)

I J K L M N O P

 DR-307 (4/4)

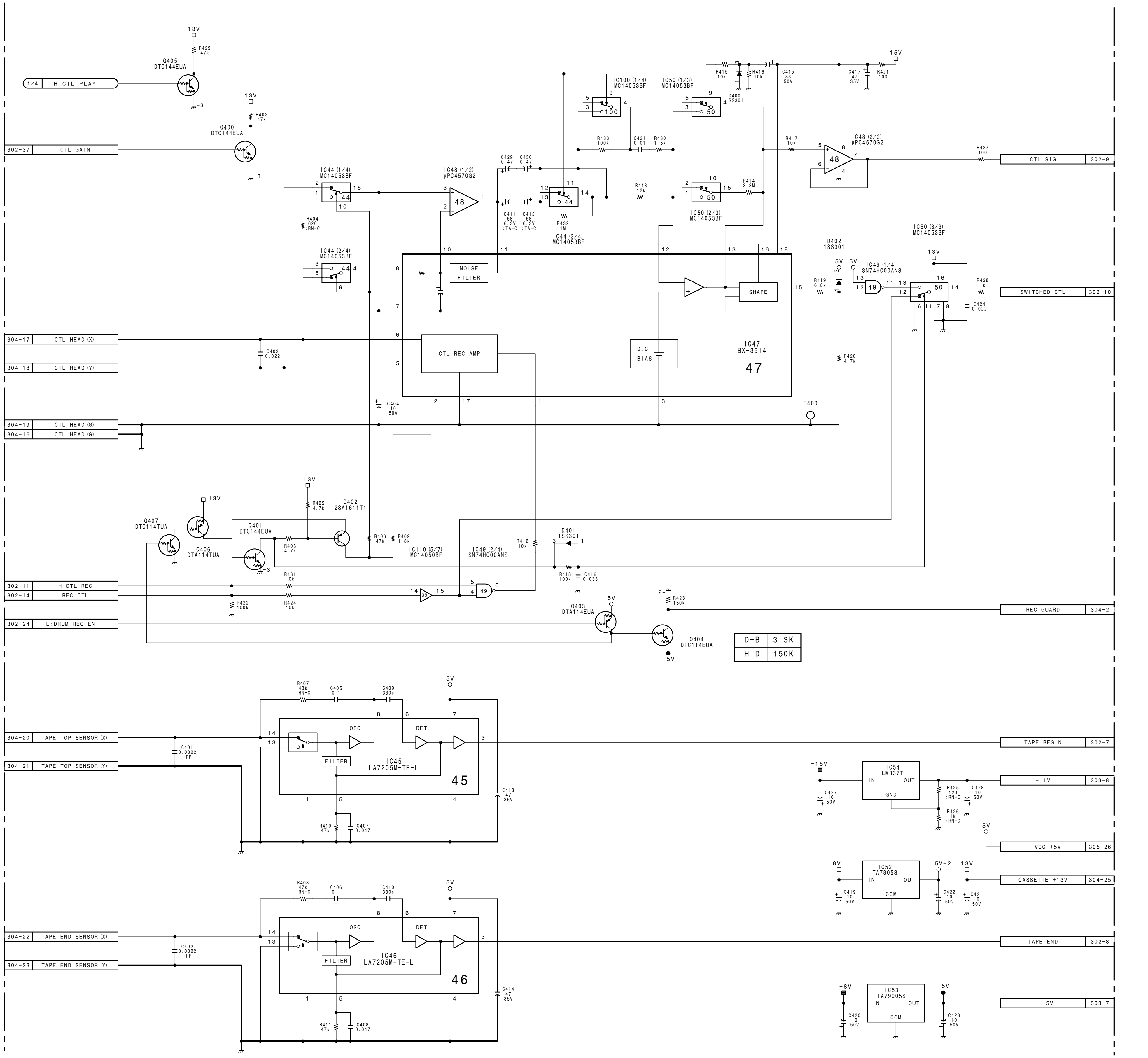

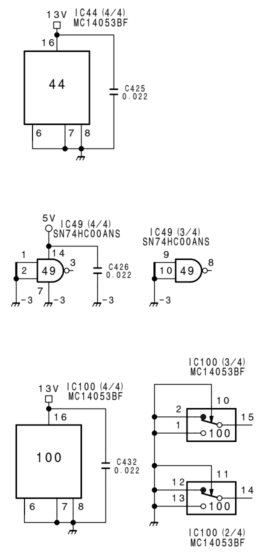

Motors (Drum, Reel Capstan, etc) driver, Solenoids driver

DR-307 BOARD (4/4)

BOARD NO. 1-664-481-12
BOARD'S LOT NO. 912-
DVW-A500 (J, UC) : DR-307 MCB
DVW-A500P (EK) : DR-307 MCB
DVW-A500P (UC) : DR-307 MCB
DVW-500 (J, UC) : DR-307 MCB
DVW-500P (EK) : DR-307 MCB
DVW-500P (UC) : DR-307 MCB
DVW-A510 (J, UC) : DR-307 MCB
DVW-A510P (EK) : DR-307 MCB
DVW-510 (J, UC) : DR-307 MCB
DVW-510P (EK) : DR-307 MCB
DVW-CA510 (J, UC) : DR-307 MCB
DVW-CA510P (EK) : DR-307 MCB

DR-200 (1/4), RM-82/141 (1/3)

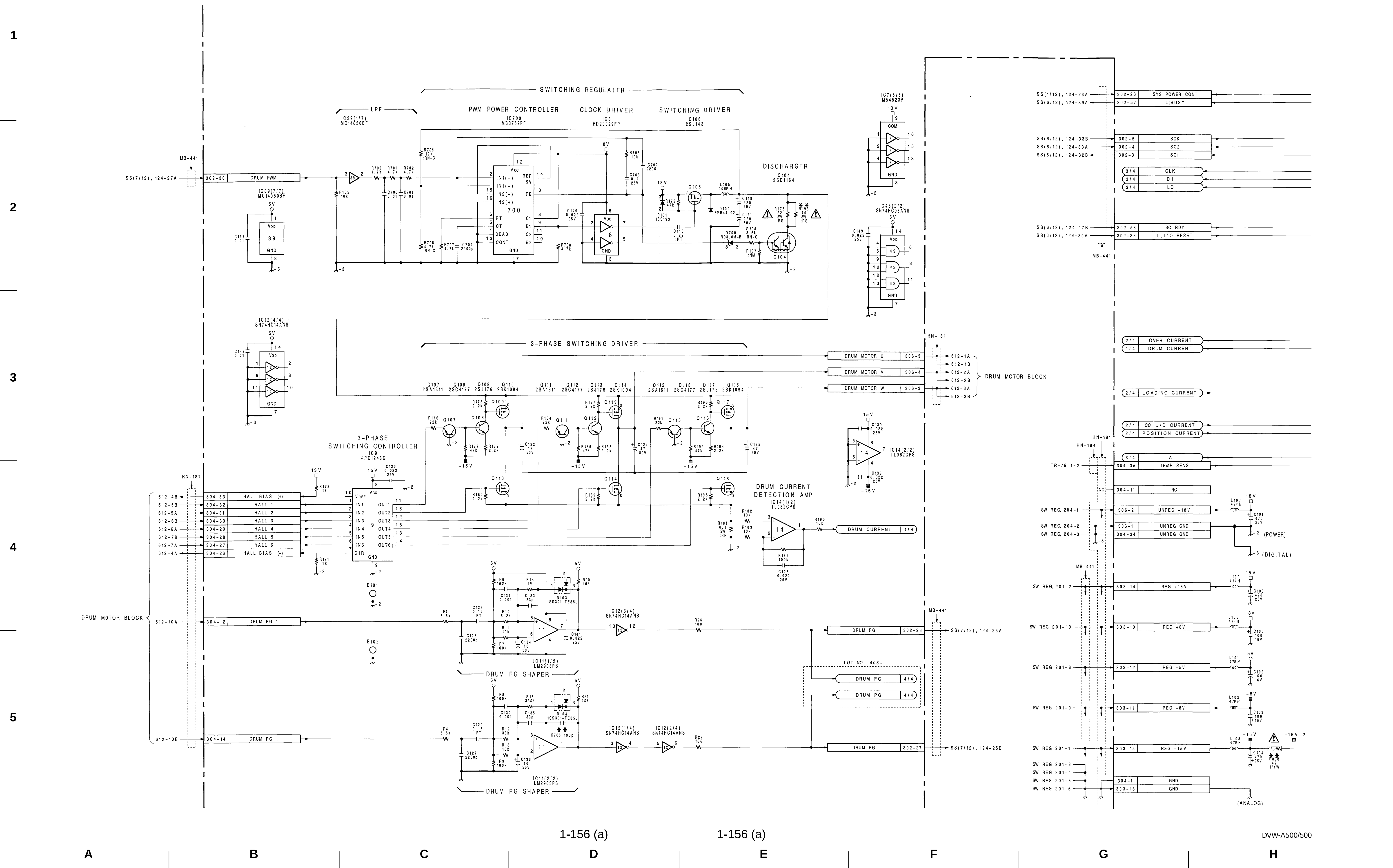

1-156 (a)

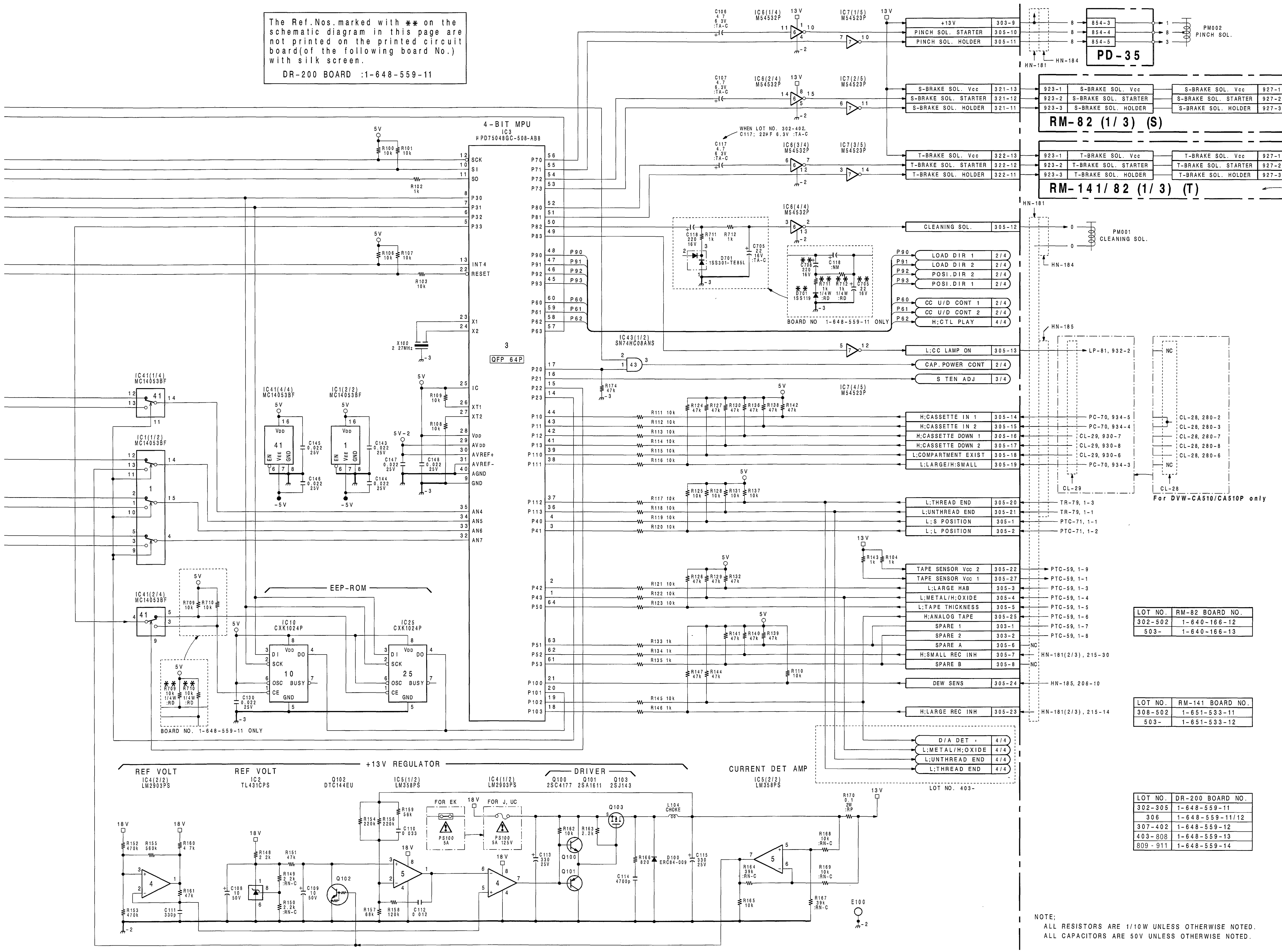

LOT NO.	RM-82 BOARD NO.
302-502	1-640-166-12
503-	1-640-166-13

LOT NO.	RM-141 BOARD NO.
308-502	1-651-533-11
503-	1-651-533-12

LOT NO.	DR-200 BOARD NO.
302-305	1-648-559-11
306	1-648-559-11/12
307-402	1-648-559-12
403-808	1-648-559-13
809-911	1-648-559-14

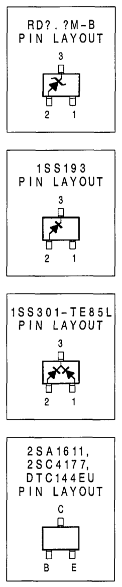

S/T Brake Sol. Connection
RM-82 BOARD (1/3)
BOARD NO. 1-640-166-12, 13

T Brake Sol. Connection
RM-141 BOARD (1/3)
BOARD NO. 1-651-533-11, 12

MPU & Drum Control
DR-200 BOARD (1/4)
BOARD NO. 1-648-559-11, 12, 13, 14
BOARD'S LOT NO. 302-911
DVW-A500 (J, UC) :DR-200N MCB
DVW-A500P (EK) :DR-200P MCB
DVW-A500P (UC) :DR-200PG MCB
DVW-500 (J, UC) :DR-200N MCB
DVW-500P (EK) :DR-200P MCB
DVW-500P (UC) :DR-200PG MCB
DVW-A510 (J, UC) :DR-200N MCB
DVW-A510P (EK) :DR-200P MCB
DVW-510 (J, UC) :DR-200N MCB
DVW-510P (EK) :DR-200P MCB
DVW-CA510(J, UC) :DR-200N MCB
DVW-CA510P(EK) :DR-200P MCB

DVW-DR200-ALL-ALL-S/M-06

DR-200 (2/4), RM-82/141 (2/3)

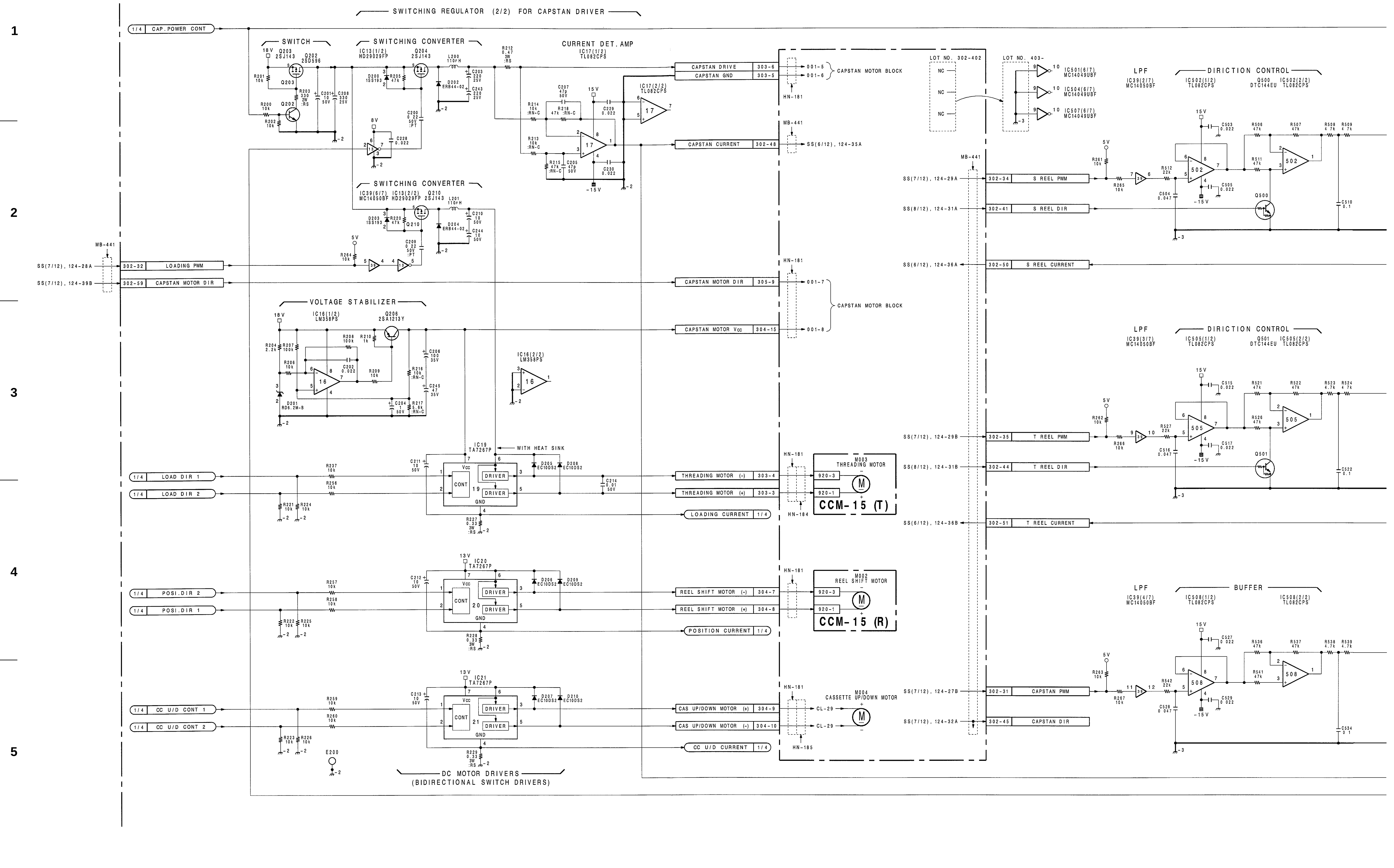

1-158 (a)

http://getMANUAL.com

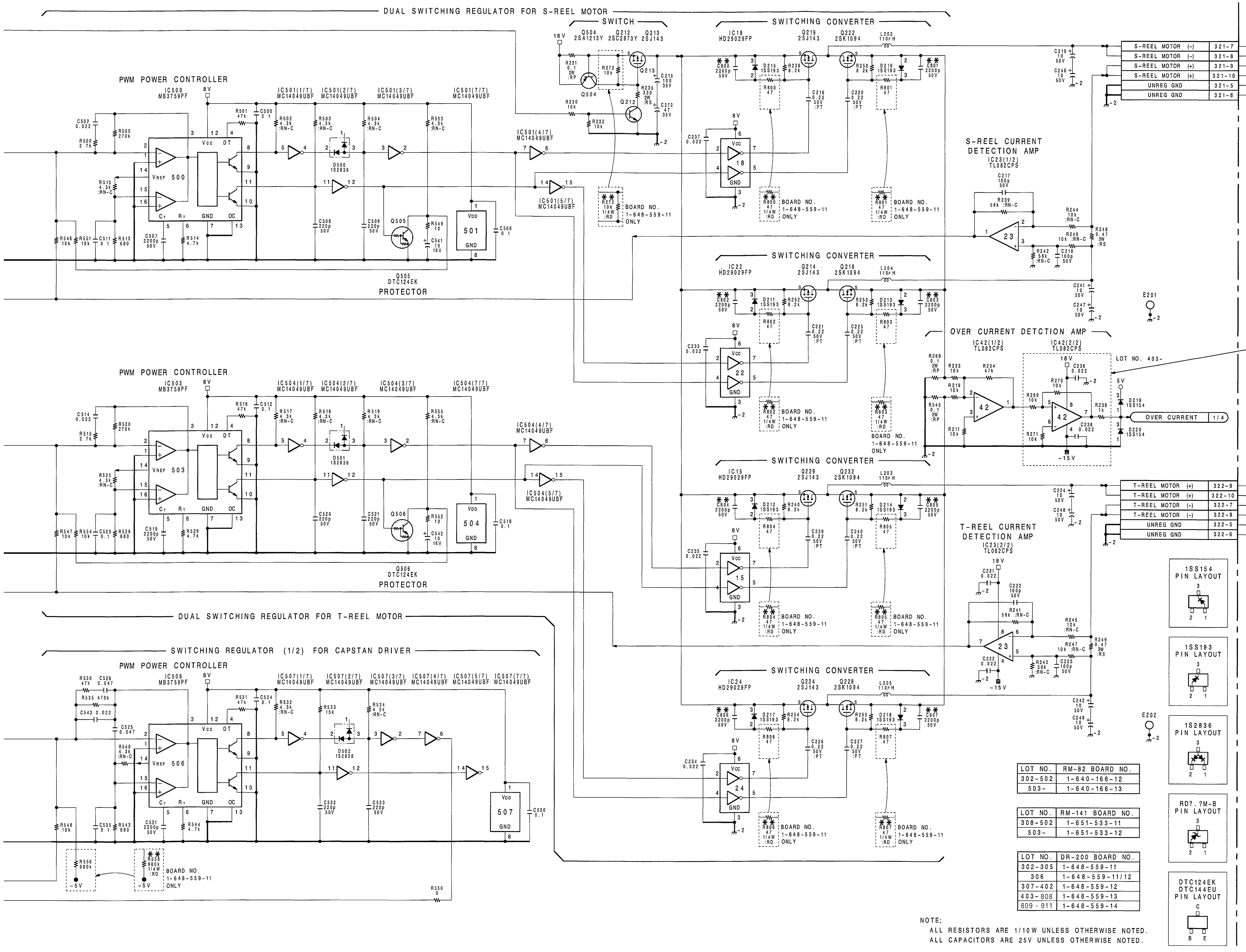

LOT NO.	RM-82 BOARD NO.
302-502	1-640-166-12
503-	1-640-166-13

LOT NO.	RM-141 BOARD NO.
308-502	1-651-533-11
503-	1-651-533-12

LOT NO.	DR-200 BOARD NO.
302-305	1-648-559-11
306	1-648-559-11/12
307-402	1-648-559-12
403-808	1-648-559-13
809 - 911	1-648-559-14

NOTE;
ALL RESISTORS ARE 1/10W UNLESS OTHERWISE NOTED.
ALL CAPACITORS ARE 25V UNLESS OTHERWISE NOTED.

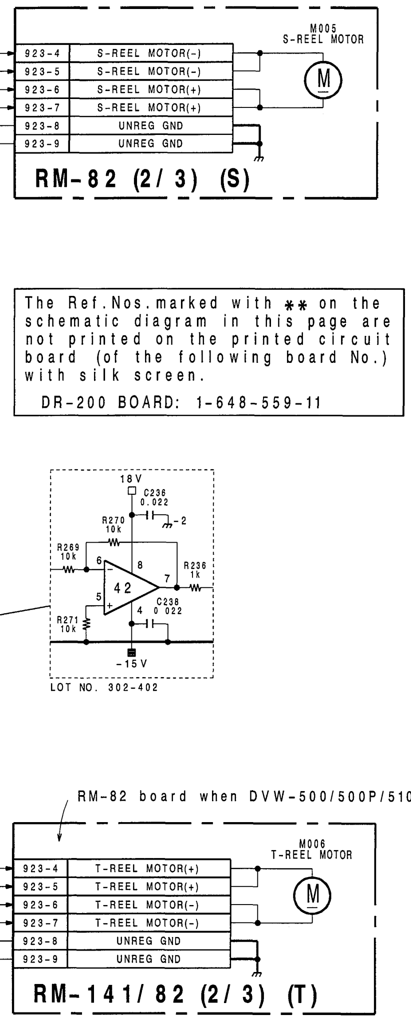

The Ref.Nos.marked with ** on the schematic diagram in this page are not printed on the printed circuit board (of the following board No.) with silk screen.
DR-200 BOARD: 1-648-559-11

S/T Reel Motor

RM-82 BOARD (2/3)

BOARD NO. 1-640-166-12, 13

T Reel Motor

RM-141 BOARD (2/3)

BOARD NO. 1-651-533-11, 12

Motor's Drive/Control

DR-200 BOARD (2/4)

BOARD NO. 1-648-559-11, 12, 13, 14
BOARD' S LOT NO. 302-911
DVW-A500 (J, UC) :DR-200N MCB
DVW-A500P (EK) :DR-200P MCB
DVW-A500P (UC) :DR-200PG MCB
DVW-500 (J, UC) :DR-200N MCB
DVW-500P (EK) :DR-200P MCB
DVW-500P (UC) :DR-200PG MCB
DVW-A510 (J, UC) :DR-200N MCB
DVW-A510P (EK) :DR-200P MCB
DVW-510 (J, UC) :DR-200N MCB
DVW-510P (EK) :DR-200P MCB
DVW-CA510(J, UC) :DR-200N MCB
DVW-CA510P(EK) :DR-200P MCB

DVW-DR200-ALL-ALL-S/M-06

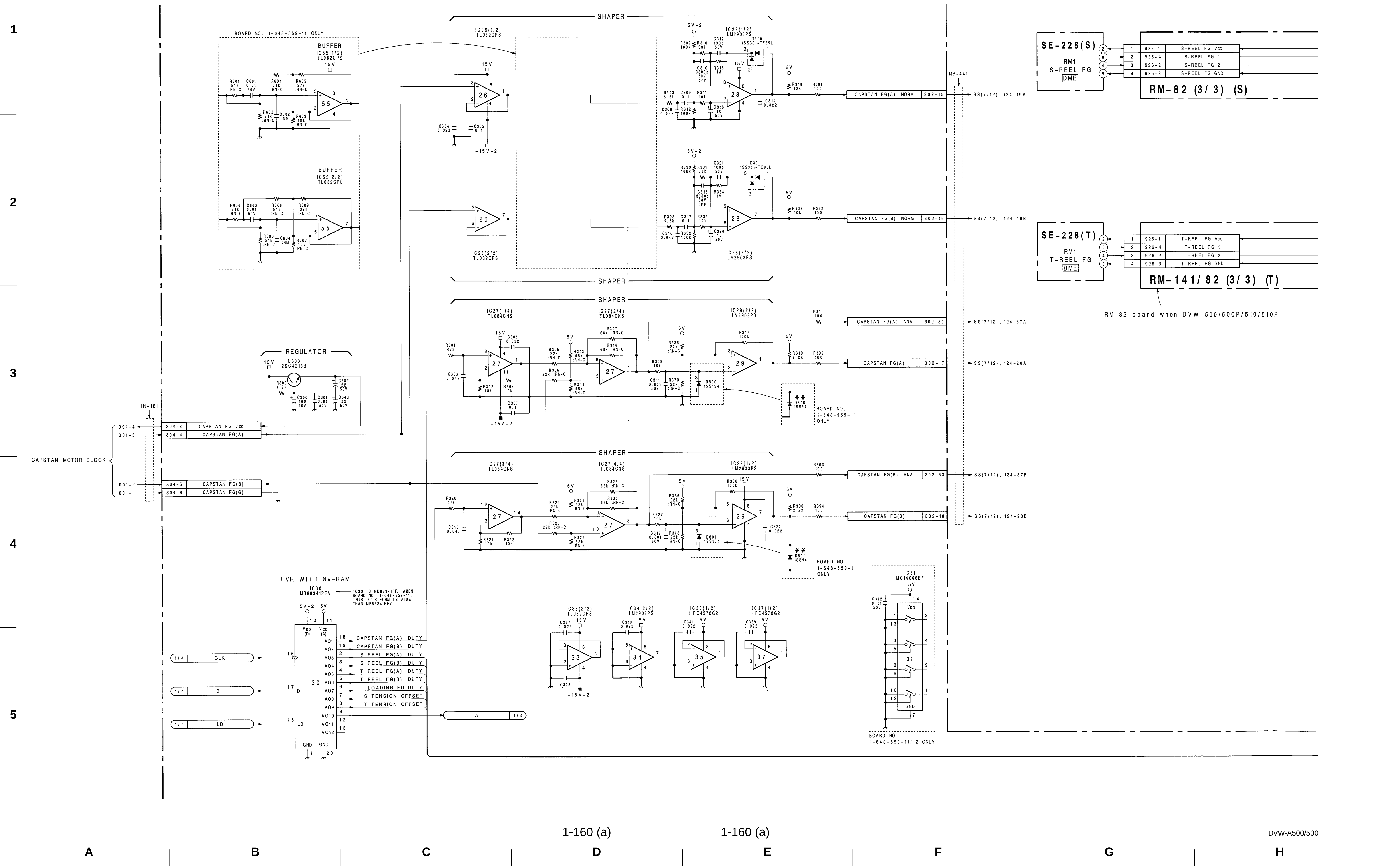
BUFFER
IC55(1/2) TL082CPS
BUFFER
IC55(2/2) TL082CPS
BOARD NO. 1-648-559-11 ONLY
SHAPER
IC26(1/2) TL082CPS
IC26(2/2) TL082CPS
IC28(1/2) LM2903PS
IC28(2/2) LM2903PS
IC27(1/4) TL084CNS
IC27(2/4) TL084CNS
IC27(3/4) TL084CNS
IC27(4/4) TL084CNS
IC29(2/2) LM2903PS
IC29(1/2) LM2903PS
REGULATOR
Q300 2SC4213B
CAPSTAN MOTOR BLOCK
HN-181
CAPSTAN FG Vcc
CAPSTAN FG(A)
CAPSTAN FG(B)
CAPSTAN FG(G)
CAPSTAN FG(A) NORM
CAPSTAN FG(B) NORM
CAPSTAN FG(A) ANA
CAPSTAN FG(A)
CAPSTAN FG(B) ANA
CAPSTAN FG(B)
SS(7/12), 124-19A
SS(7/12), 124-19B
SS(7/12), 124-37A
SS(7/12), 124-20A
SS(7/12), 124-37B
SS(7/12), 124-20B
MB-441
SE-228(S)
RM1 S-REEL FG
DME
S-REEL FG Vcc
S-REEL FG 1
S-REEL FG 2
S-REEL FG GND
RM-82 (3/3) (S)
SE-228(T)
RM1 T-REEL FG
T-REEL FG Vcc
T-REEL FG 1
T-REEL FG 2
T-REEL FG GND
RM-141/82 (3/3) (T)
RM-82 board when DVW-500/500P/510/510P
BOARD NO. 1-648-559-11 ONLY
EVR WITH NV-RAM
IC30 MB88341PFV
IC30 IS MB88341PF, WHEN BOARD NO. 1-648-559-11. THIS IC'S FORM IS WIDE THAN MB88341PFV.
CAPSTAN FG(A) DUTY
CAPSTAN FG(B) DUTY
S REEL FG(A) DUTY
S REEL FG(B) DUTY
T REEL FG(A) DUTY
T REEL FG(B) DUTY
LOADING FG DUTY
S TENSION OFFSET
T TENSION OFFSET
CLK
DI
LD
IC33(2/2) TL082CPS
IC34(2/2) LM2903PS
IC35(1/2) μPC4570G2
IC37(1/2) μPC4570G2
IC31 MC14066BF
BOARD NO. 1-648-559-11/12 ONLY

DR-200 (3/4), RM-82/141 (3/3), SE-228

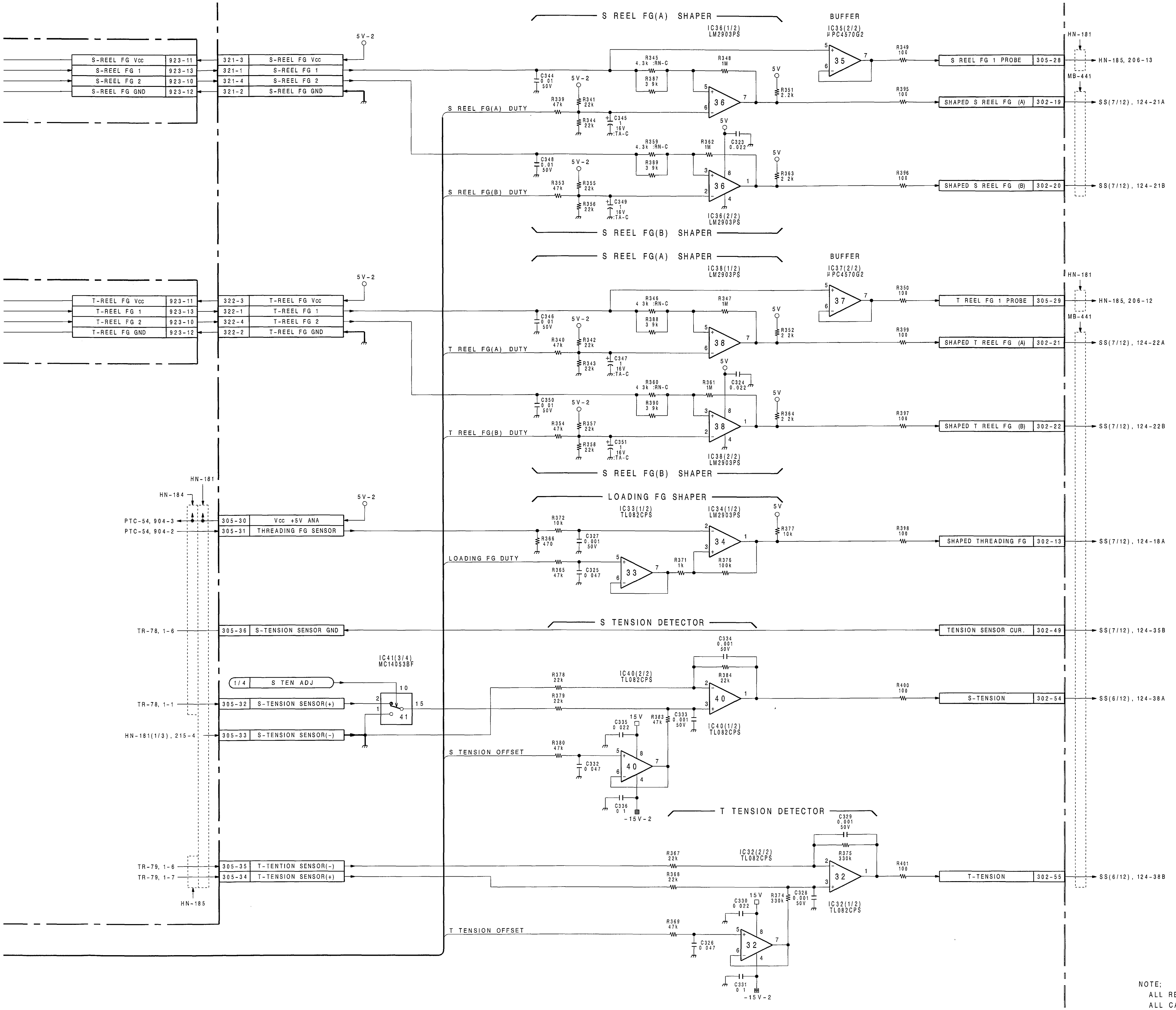

The Ref.Nos.marked with ** on the schematic diagram in this page are not printed on the printed circuit board(of the following board No.) with silk screen.

DR-200 BOARD :1-648-559-11

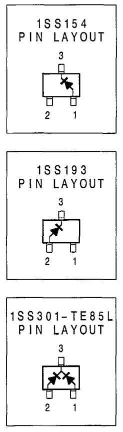

S/T Reel FG
SE-228 BOARD
BOARD NO. 1-649-617-11

S/T Reel FG Connection
RM-82 BOARD (3/3)
BOARD NO. 1-640-166-12, 13

LOT NO.	RM-82 BOARD NO.
302-502	1-640-166-12
503-	1-640-166-13

T Reel FG Connection
RM-141 BOARD (3/3)
BOARD NO. 1-651-533-11, 12

LOT NO.	RM-141 BOARD NO.
308-502	1-651-533-11
503-	1-651-533-12

Wavefrom Shaper
DR-200 BOARD (3/4)
BOARD NO. 1-648-559-11, 12, 13, 14
BOARD' S LOT NO. 302-911
DVW-A500 (J, UC) :DR-200N MCB
DVW-A500P (EK) :DR-200P MCB
DVW-A500P (UC) :DR-200PG MCB
DVW-500 (J, UC) :DR-200N MCB
DVW-500P (EK) :DR-200P MCB
DVW-500P (UC) :DR-200PG MCB
DVW-A510 (J, UC) :DR-200N MCB
DVW-A510P (EK) :DR-200P MCB
DVW-510 (J, UC) :DR-200N MCB
DVW-510P (EK) :DR-200P MCB
DVW-CA510(J, UC) :DR-200N MCB
DVW-CA510P(EK) :DR-200P MCB

LOT NO.	DR-200 BOARD NO.
302-305	1-648-559-11
306	1-648-559-11/12
307-402	1-648-559-12
403-808	1-648-559-13
809 - 911	1-648-559-14

NOTE;
ALL RESISTORS ARE 1/10W UNLESS OTHERWISE NOTED.
ALL CAPACITORS ARE 25V UNLESS OTHERWISE NOTED.

DVW-DR200-ALL-ALL-S/M-06

1-161 (a)

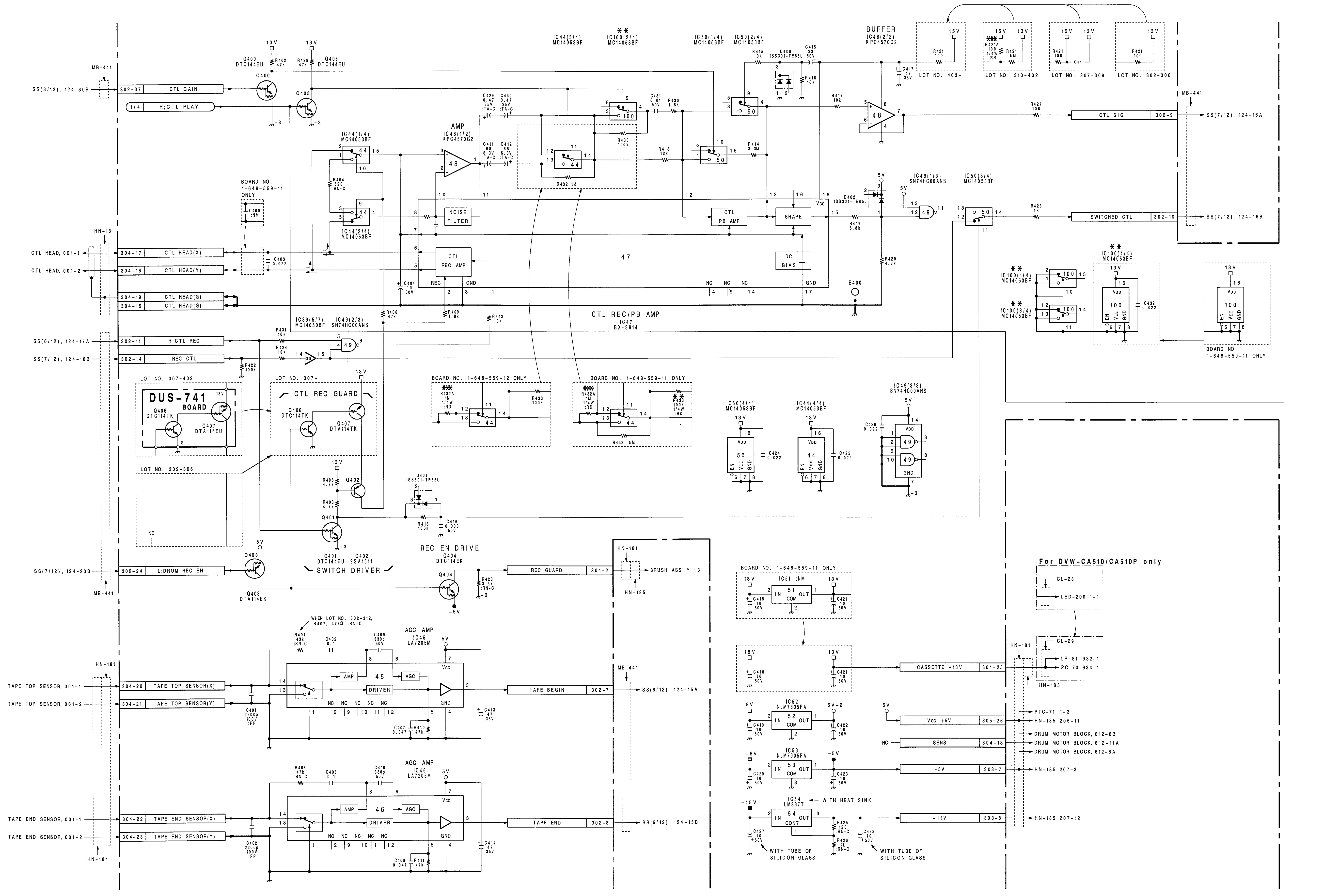

BUFFER
AMP
CTL REC/PB AMP
CTL REC GUARD
SWITCH DRIVER
REC EN DRIVE
AGC AMP
DUS-741 BOARD
NOISE FILTER
CTL REC AMP
CTL PB AMP
SHAPE
DC BIAS
CTL GAIN
H;CTL PLAY
CTL HEAD(X)
CTL HEAD(Y)
CTL HEAD(G)
H;CTL REC
REC CTL
L;DRUM REC EN
REC GUARD
CTL SIG
SWITCHED CTL
TAPE TOP SENSOR(X)
TAPE TOP SENSOR(Y)
TAPE END SENSOR(X)
TAPE END SENSOR(Y)
TAPE BEGIN
TAPE END
CASSETTE +13V
Vcc +5V
SENS
-5V
-11V
WITH HEAT SINK
WITH TUBE OF SILICON GLASS
For DVW-CA510/CA510P only

A | B | C | D | E | F | G | H

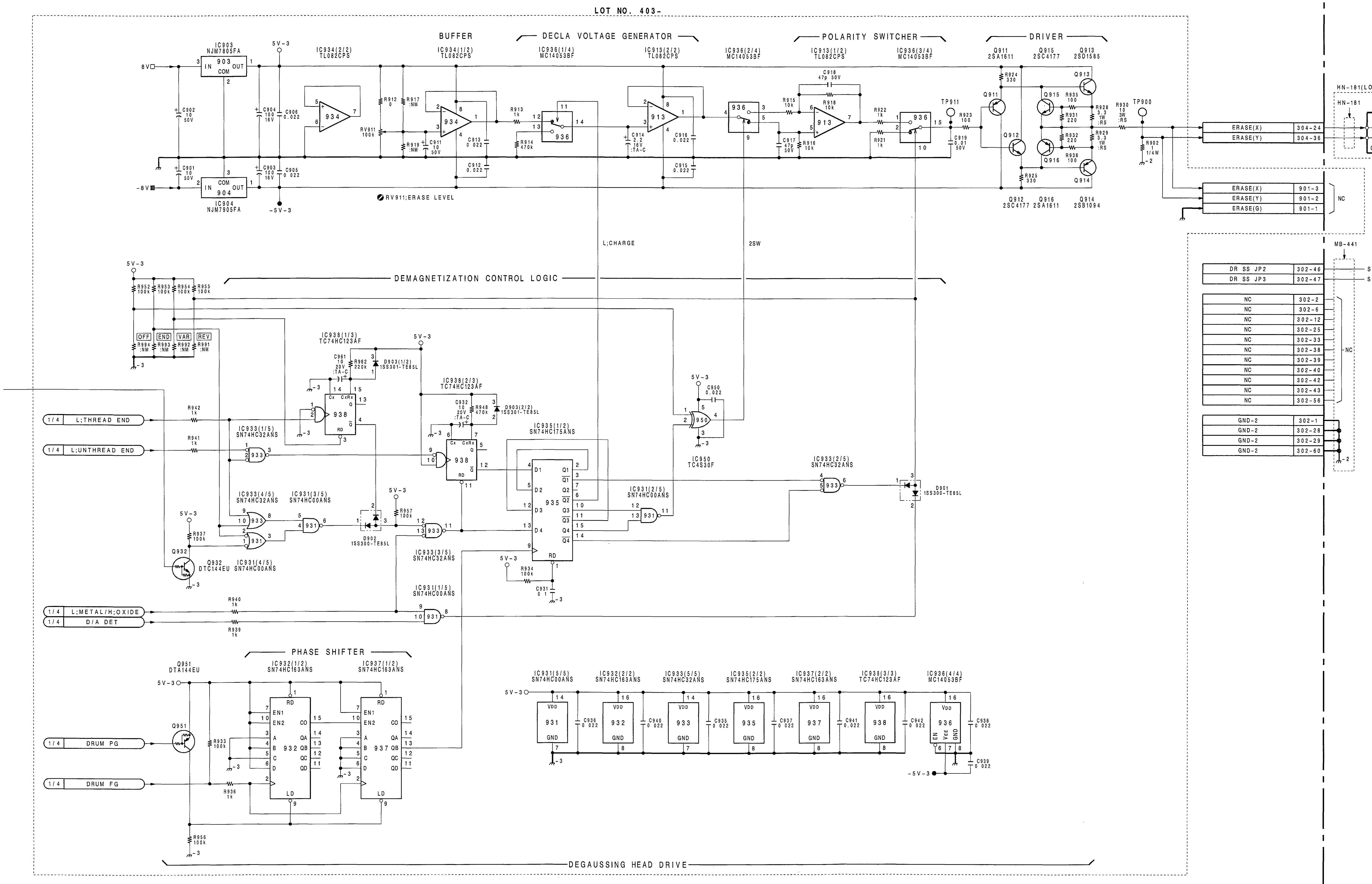

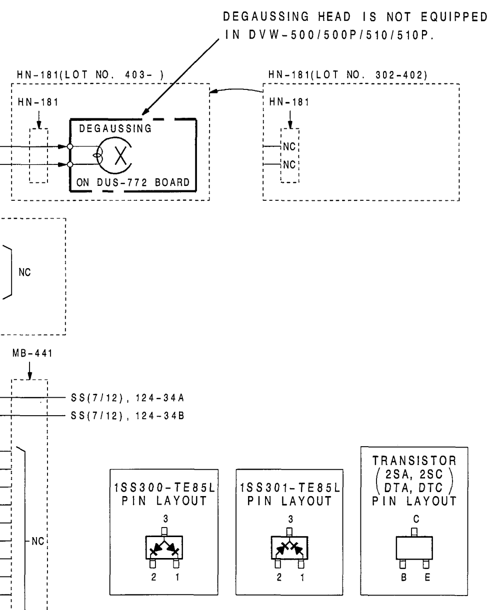

The Ref.Nos.marked with ** on the schematic diagram in this page are not printed on the printed circuit board (of the following board No.) with silk screen.

DR-200 BOARD: 1-648-559-11

The Ref.Nos.marked with *** are not printed on the printed circuit board (of the following board No.) with silk screen.

DR-200 BOARD: 1-648-559-12

CTL REC Guard

DUS-741 BOARD

BOARD NO. 1-708-358-11(0-225-035-01)
FOR DR-200 OF LOT NO. 307-402

CTL REC/PB, Tape Top/End Sensor Amp., Degaussing Head Drive

DR-200 BOARD (4/4)

BOARD NO. 1-648-559-11, 12, 13, 14
BOARD' S LOT NO. 302-911

DVW-A500 (J, UC) :DR-200N MCB
DVW-A500P (EK) :DR-200P MCB
DVW-A500P (UC) :DR-200PG MCB
DVW-500 (J, UC) :DR-200N MCB
DVW-500P (EK) :DR-200P MCB
DVW-500P (UC) :DR-200PG MCB
DVW-A510 (J, UC) :DR-200N MCB
DVW-A510P (EK) :DR-200P MCB
DVW-510 (J, UC) :DR-200N MCB
DVW-510P (EK) :DR-200P MCB
DVW-CA510(J, UC) :DR-200N MCB
DVW-CA510P(EK) :DR-200P MCB

LOT NO.	DR-200 BOARD NO.
302-305	1-648-559-11
306	1-648-559-11/12
307-402	1-648-559-12
403-808	1-648-559-13
809-911	1-648-559-14

NOTE:
ALL RESISTORS ARE 1/10W UNLESS OTHERWISE NOTED.
ALL CAPACITORS ARE 25V UNLESS OTHERWISE NOTED.

DVW-DR200-ALL-ALL-S/M-06

1-163 (a)

HN-181 (1/3), HN-184, TR-78, RD-35, PTC-54, CCM-15 (T)

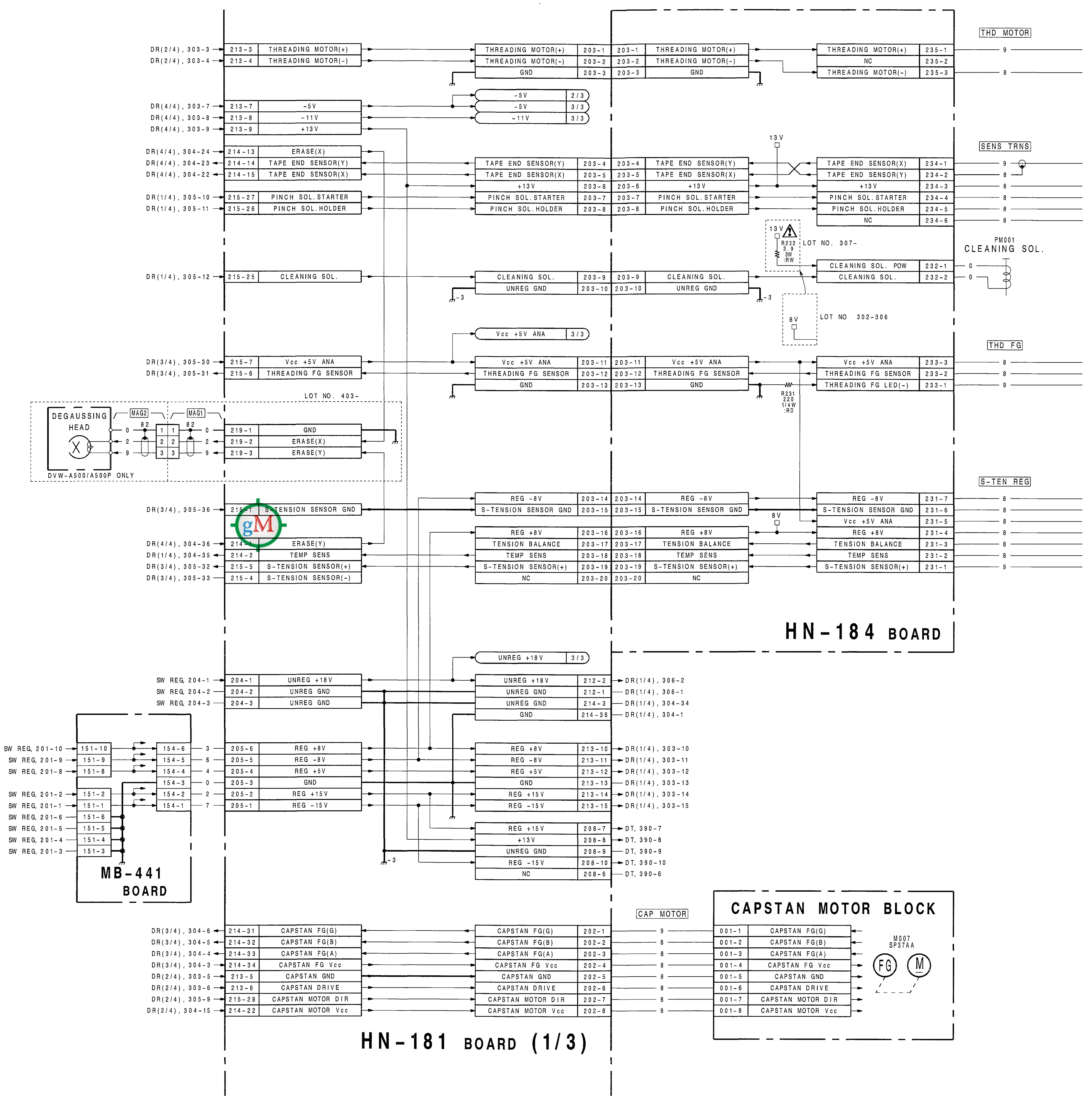

1-164

 HN-181 (1/3), HN-184, TR-78, RD-35, PTC-54, CCM-15 (T)

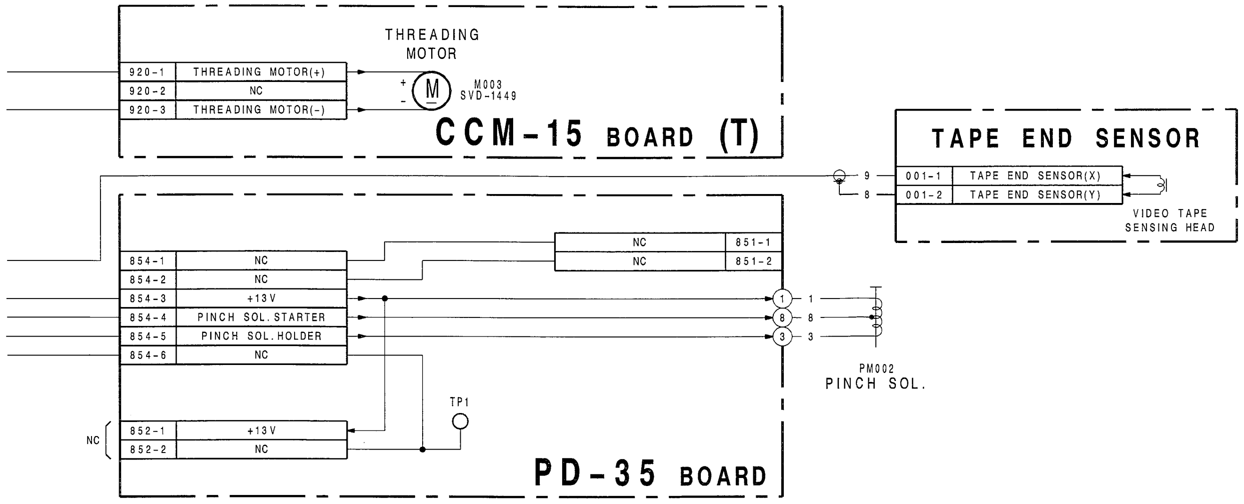

LOT NO.	PTC-54 BOARD NO.
302-408	1-640-163-11
409-	1-640-163-12

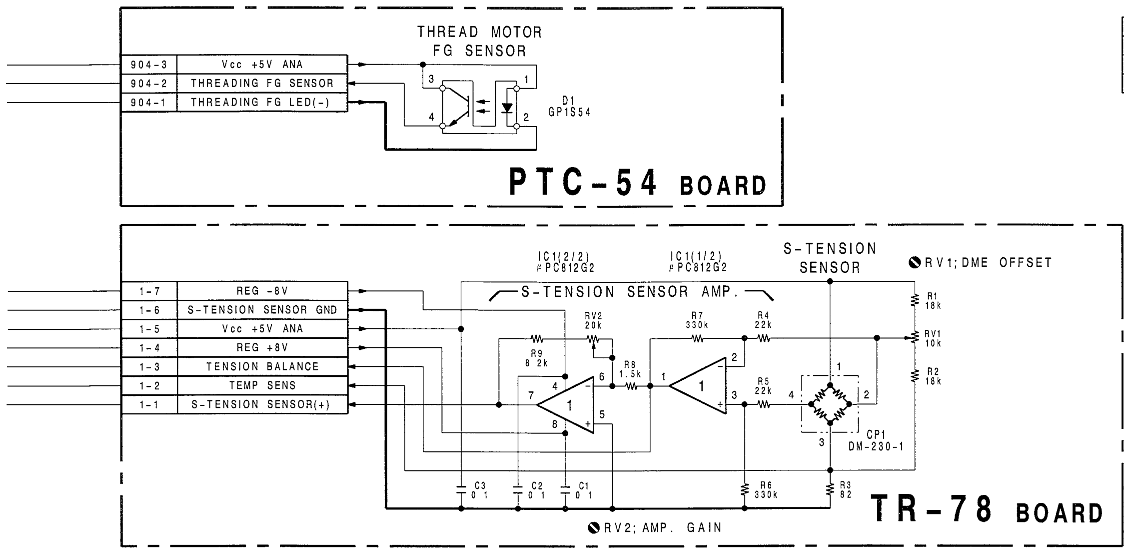

LOT NO.	BOARD NO.	
	HN-181	HN-184
302-306	1-648-561-11	1-648-562-11
307-402	1-648-561-12	1-648-562-12
403-	1-648-561-13	1-648-562-13

1

S-Tension Sensor
TR-78 BOARD
BOARD NO. 1-648-564-11
ALL DVWs :TR-78 MCB

2

Threading FG
PTC-54 BOARD
BOARD NO. 1-640-163-11, 12
ALL DVWs :PTC-54 MCB

Pinch Solenoid Connection
PD-35 BOARD
BOARD NO. 1-622-596-11
ALL DVWs

3

Threading Motor
CCM-15 BOARD (T)
BOARD NO. 1-648-570-11
ALL DVWs

Connection Board
HN-184 BOARD
BOARD NO. 1-648-562-11, 12, 13
BOARD' S LOT NO. 302-
ALL DVWs :HN-184 MCB

4

Connection
HN-181 BOARD (1/3)
BOARD NO. 1-648-561-11, 12, 13
BOARD' S LOT NO. 302-
DVW-A500 (J, UC) :HN-181 MCB
DVW-A500P (EK) :HN-181 MCB
DVW-A500P (UC) :HN-181 MCB
DVW-500 (J, UC) :HN-181 MCB
DVW-500P(EK, UC) :HN-181 MCB
DVW-A510 (J, UC) :HN-181B MCB
DVW-A510P (EK) :HN-181B MCB
DVW-510 (J, UC) :HN-181B MCB
DVW-510P (EK) :HN-181B MCB
DVW-CA510(J, UC) :HN-181B MCB
DVW-CA510P(EK) :HN-181B MCB

5

DVW-HN181-ALL-REC-S/M-05

NOTE;
ALL RESISTORS ARE 1/10W UNLESS OTHERWISE NOTED.
ALL CAPACITORS ARE 25V UNLESS OTHERWISE NOTED.

HN-181 (2/3), PTC-59, PTC-71, CCM-15 (R)

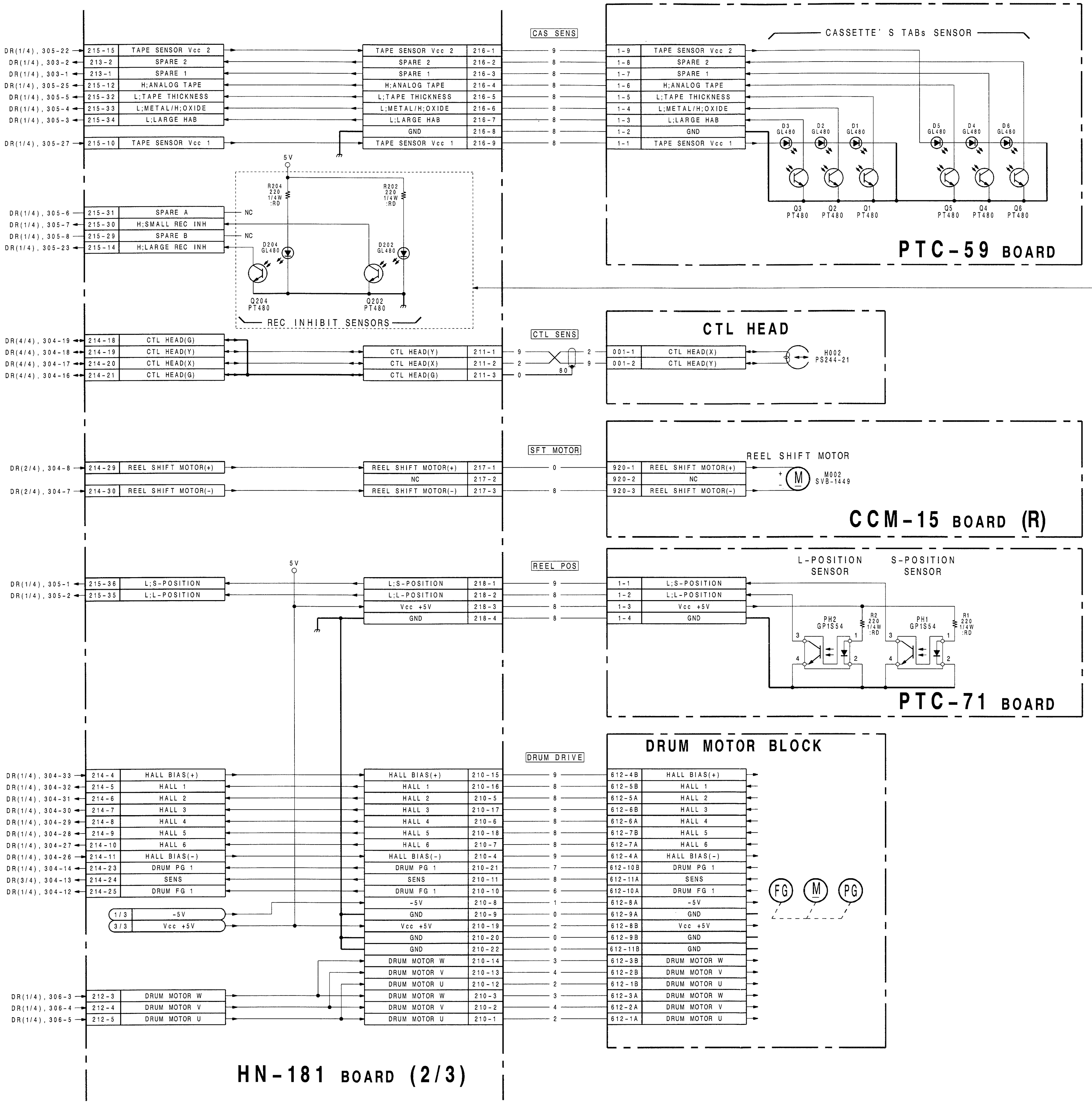

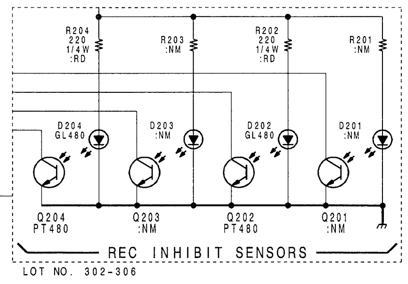

Cassette's Tabs Sensor
PTC-59 BOARD
BOARD NO. 1-648-567-11
ALL DVWs :PTC-59 MCB

Reel Position Sensor
PTC-71 BOARD
BOARD NO. 1-648-569-11
ALL DVWs :PTC-71 MCB

Reel Shift Motor
CCM-15 BOARD (R)
BOARD NO. 1-648-570-11
ALL DVWs

Connection Board with REC Inhibit Sensor
HN-181 BOARD (2/3)

LOT NO.	BOARD NO. HN-181
302-306	1-648-561-11
307-402	1-648-561-12
403-	1-648-561-13

BOARD NO. 1-648-561-11, 12, 13
BOARD' S LOT NO. 302-
DVW-A500(J, UC) :HN-181 MCB
DVW-A500P(EK) :HN-181 MCB
DVW-A500P(UC) :HN-181 MCB
DVW-500 (J, UC) :HN-181 MCB
DVW-500P (EK) :HN-181 MCB
DVW-500P (UC) :HN-181 MCB

DVW-HN181-ALL-REC-S/M-04

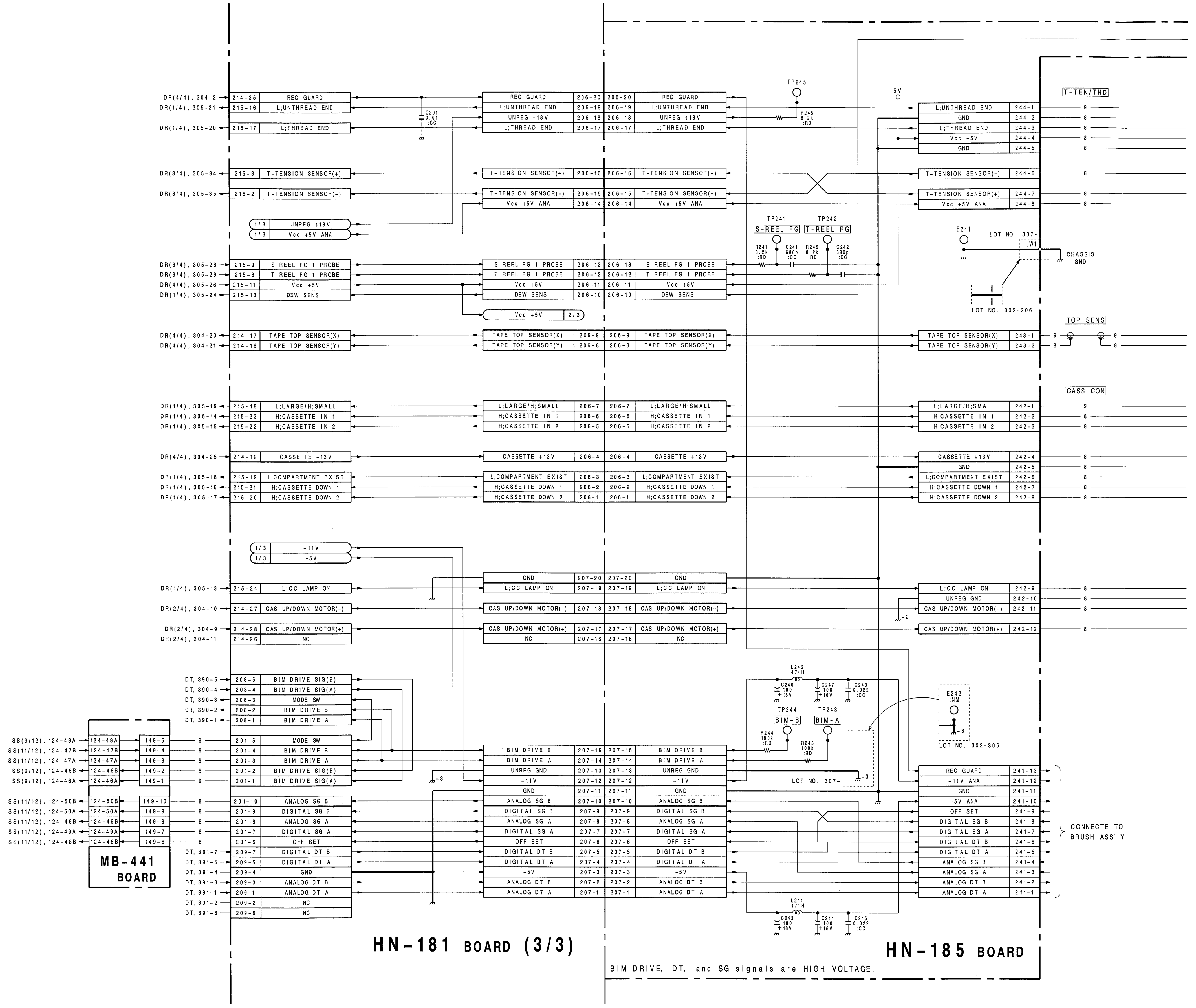
HN-181 BOARD (3/3)
HN-185 BOARD
MB-441 BOARD
BIM DRIVE, DT, and SG signals are HIGH VOLTAGE.
T-TEN/THD
TOP SENS
CASS CON
CONNECTE TO BRUSH ASS' Y

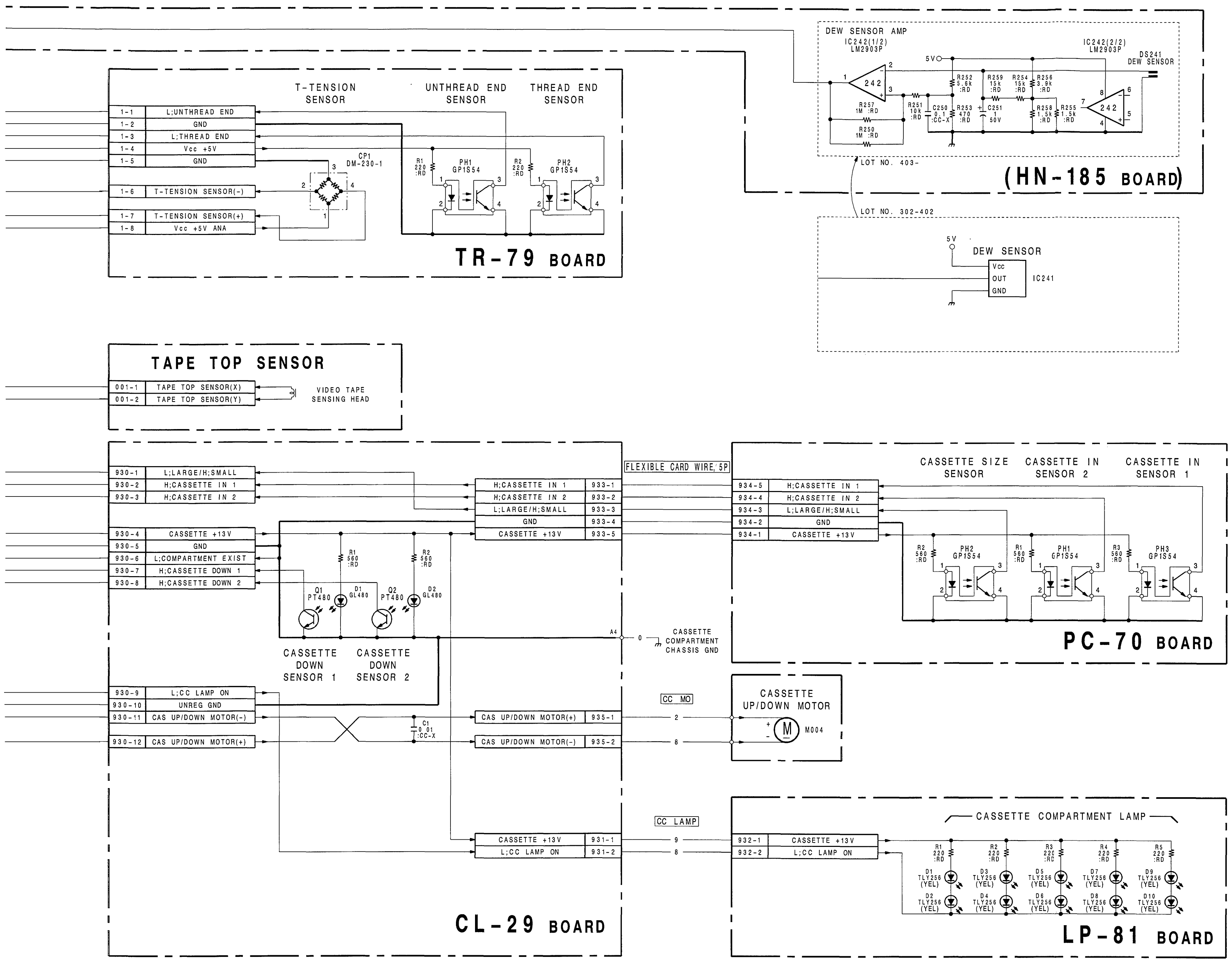

NOTE;
ALL RESISTORS ARE 1/4W UNLESS OTHERWISE NOTED.
ALL CAPACITORS ARE 50V UNLESS OTHERWISE NOTED.

LOT NO.	BOARD NO.	
	HN-181	HN-185
302-306	1-648-561-11	1-648-563-11
307-402	1-648-561-12	1-648-563-12
403-	1-648-561-13	1-648-563-14

T-Tension Sensor, Thread/Unthread-End Sensor

TR-79 BOARD

BOARD NO. 1-648-565-11
ALL DVWs :TR-79 MCB

Cassette-In Sensor, Cassette Down Sensor

PC-70 BOARD

BOARD NO. 1-648-571-11,12
BOARD' S LOT NO. 302-
DVW-A500 (J, UC) :PC-70 MCB
DVW-A500P (EK) :PC-70 MCB
DVW-A500P (UC) :PC-70 MCB
DVW-500 (J, UC) :PC-70 MCB
DVW-500P(EK, UC) :PC-70 MCB
DVW-A510 (J, UC) :PC-70 MCB
DVW-A510P (EK) :PC-70 MCB
DVW-510 (J, UC) :PC-70 MCB
DVW-510P (EK) :PC-70 MCB

Cassette Up/Down Motor, Cassette Down Sensor

CL-29 BOARD

BOARD NO. 1-648-572-11
BOARD' S LOT NO. 302-
DVW-A500 (J, UC) :CL-29 MCB
DVW-A500P (EK) :CL-29 MCB
DVW-A500P (UC) :CL-29 MCB
DVW-500 (J, UC) :CL-29 MCB
DVW-500P(EK, UC) :CL-29 MCB
DVW-A510 (J, UC) :CL-29 MCB
DVW-A510P (EK) :CL-29 MCB
DVW-510 (J, UC) :CL-29 MCB
DVW-510P (EK) :CL-29 MCB

Lamp of Compartment

LP-81 BOARD

BOARD NO. 1-648-573-11
BOARD' S LOT NO. 302-
DVW-A500 (J, UC) :LP-81 MCB
DVW-A500P (EK) :LP-81 MCB
DVW-A500P (UC) :LP-81 MCB
DVW-500 (J, UC) :LP-81 MCB
DVW-500P(EK, UC) :LP-81 MCB
DVW-A510 (J, UC) :LP-81 MCB
DVW-A510P (EK) :LP-81 MCB
DVW-510 (J, UC) :LP-81 MCB
DVW-510P (EK) :LP-81 MCB

Connection Board with Dew Sensor

HN-185 BOARD

BOARD NO. 1-648-563-11, 12, 14
BOARD' S LOT NO. 302-
ALL DVWs :HN-185 MCB

Connection

HN-181 BOARD (3/3)

BOARD NO. 1-648-561-11, 12, 13
BOARD' S LOT NO. 302-
DVW-A500 (J, UC) :HN-181 MCB
DVW-A500P (EK) :HN-181 MCB
DVW-A500P (UC) :HN-181 MCB
DVW-500 (J, UC) :HN-181 MCB
DVW-500P(EK, UC) :HN-181 MCB
DVW-A510 (J, UC) :HN-181B MCB
DVW-A510P (EK) :HN-181B MCB
DVW-510 (J, UC) :HN-181B MCB
DVW-510P (EK) :HN-181B MCB
DVW-CA510(J, UC) :HN-181B MCB
DVW-CA510P(EK) :HN-181B MCB

DVW-HN181-ALL-REC-S/M-04

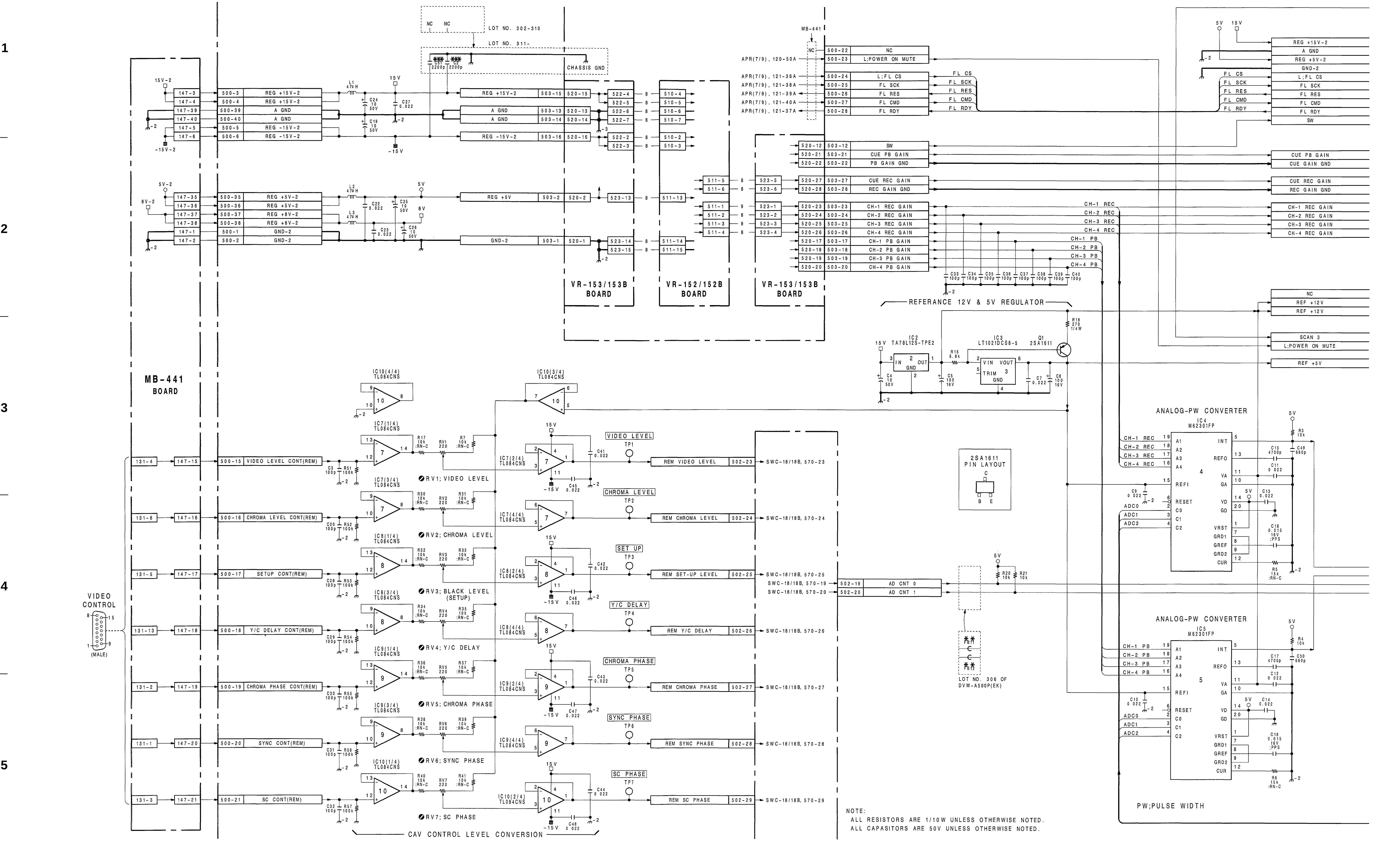
MB-441 BOARD
VR-153/153B BOARD
VR-152/152B BOARD
VR-153/153B BOARD
VIDEO CONTROL
(MALE)
LOT NO. 302-310
LOT NO. 311-
CHASSIS GND
REFERANCE 12V & 5V REGULATOR
IC2 TA78L12S-TPE2
IC3 LT1021DCS8-5
Q1 2SA1611
2SA1611 PIN LAYOUT
ANALOG-PW CONVERTER
IC4 M62301FP
IC5 M62301FP
PW;PULSE WIDTH
VIDEO LEVEL
CHROMA LEVEL
SET UP
Y/C DELAY
CHROMA PHASE
SYNC PHASE
SC PHASE
RV1; VIDEO LEVEL
RV2; CHROMA LEVEL
RV3; BLACK LEVEL (SETUP)
RV4; Y/C DELAY
RV5; CHROMA PHASE
RV6; SYNC PHASE
RV7; SC PHASE
CAV CONTROL LEVEL CONVERSION
LOT NO. 306 OF DVW-A500P(EK)
NOTE:
ALL RESISTORS ARE 1/10W UNLESS OTHERWISE NOTED.
ALL CAPASITORS ARE 50V UNLESS OTHERWISE NOTED.

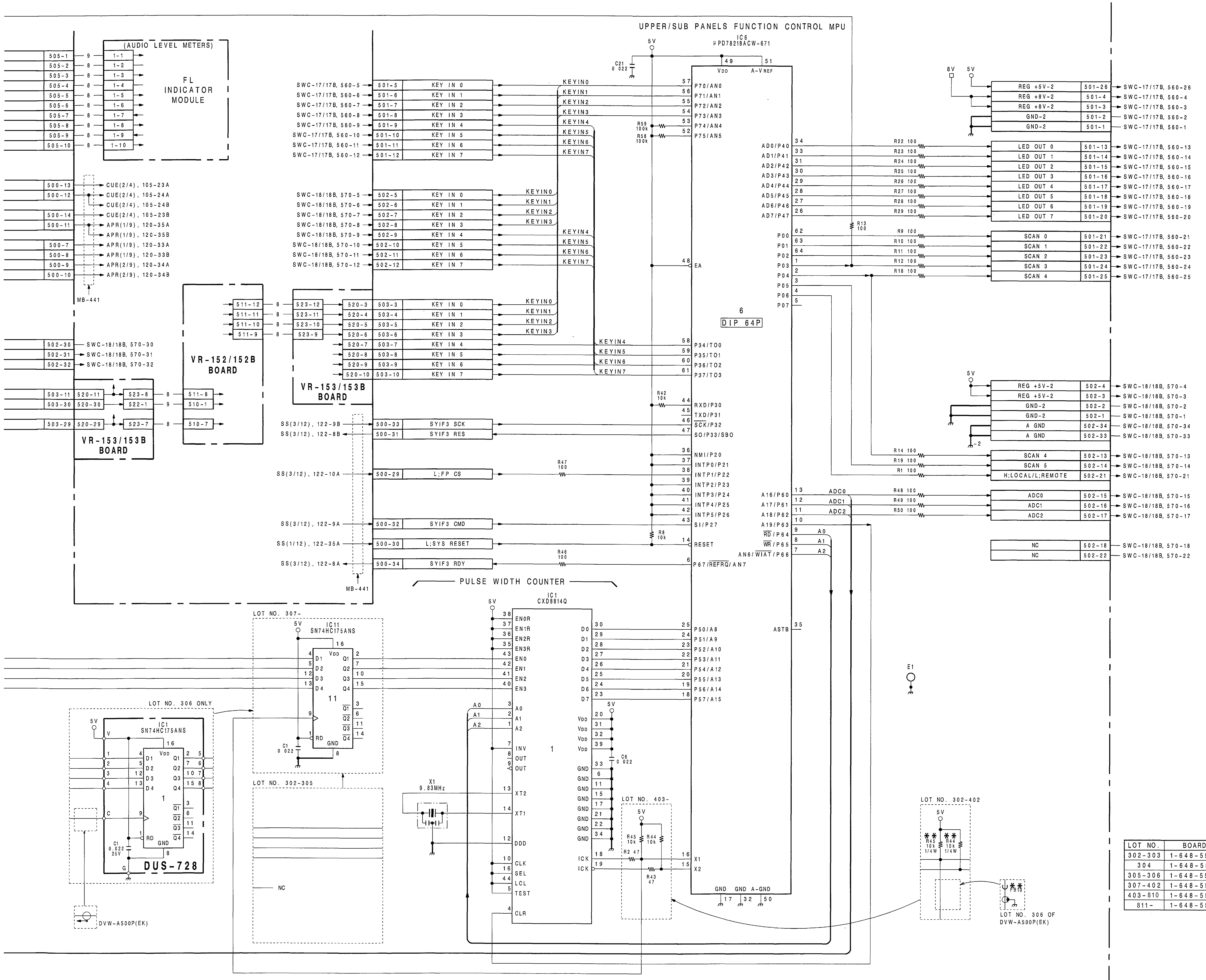

The Ref.Nos.marked with ** on the schematic diagram in this page are not printed on the printed circuit boards (of the following board No.) with silk screen.

FP-58 BOARD: 1-648-551-11
FP-58B BOARD: 1-648-551-21

The Ref.Nos.marked with *** are not printed on the printed circuit boards (of the following board No.) with silk screen.

FP-58 BOARD: 1-648-551-11, 12
FP-58B BOARD: 1-648-551-21, 22

LOT NO.	BOARD NO.
302-303	1-648-551-11
304	1-648-551-11/21
305-306	1-648-551-11
307-402	1-648-551-12/22
403-810	1-648-551-13/23
811-	1-648-551-14/24

DUS-728 BOARD

BOARD NO. 1-651-012-11
FOR FP-58 BOARD (LOT NO.306 ONLY)

Sub/Upper Control Panels Function(SWs, LEDs) Control, CAV Control Level Conversion

FP-58/58B BOARD

BOARD NO. 1-648-551-11, 12, 13, 14/22, 23, 24
BOARD'S LOT NO. 302-
DVW-A500 (J, UC) :FP-58 MCB
DVW-A500P (EK) :FP-58 MCB
DVW-A500P (UC) :FP-58 MCB
DVW-500 (J, UC) :FP-58 MCB
DVW-500P(EK, UC) :FP-58 MCB
DVW-A510 (J, UC) :FP-58B MCB
DVW-A510P (EK) :FP-58B MCB
DVW-510 (J, UC) :FP-58B MCB
DVW-510P (EK) :FP-58B MCB
DVW-CA510(J, UC) :FP-58B MCB
DVW-CA510P(EK) :FP-58B MCB
Repair for FP-58B MCB is FP-58 MCB

DVW-FP58-ALL-ALL-S/M-05

1
2
3
4
5

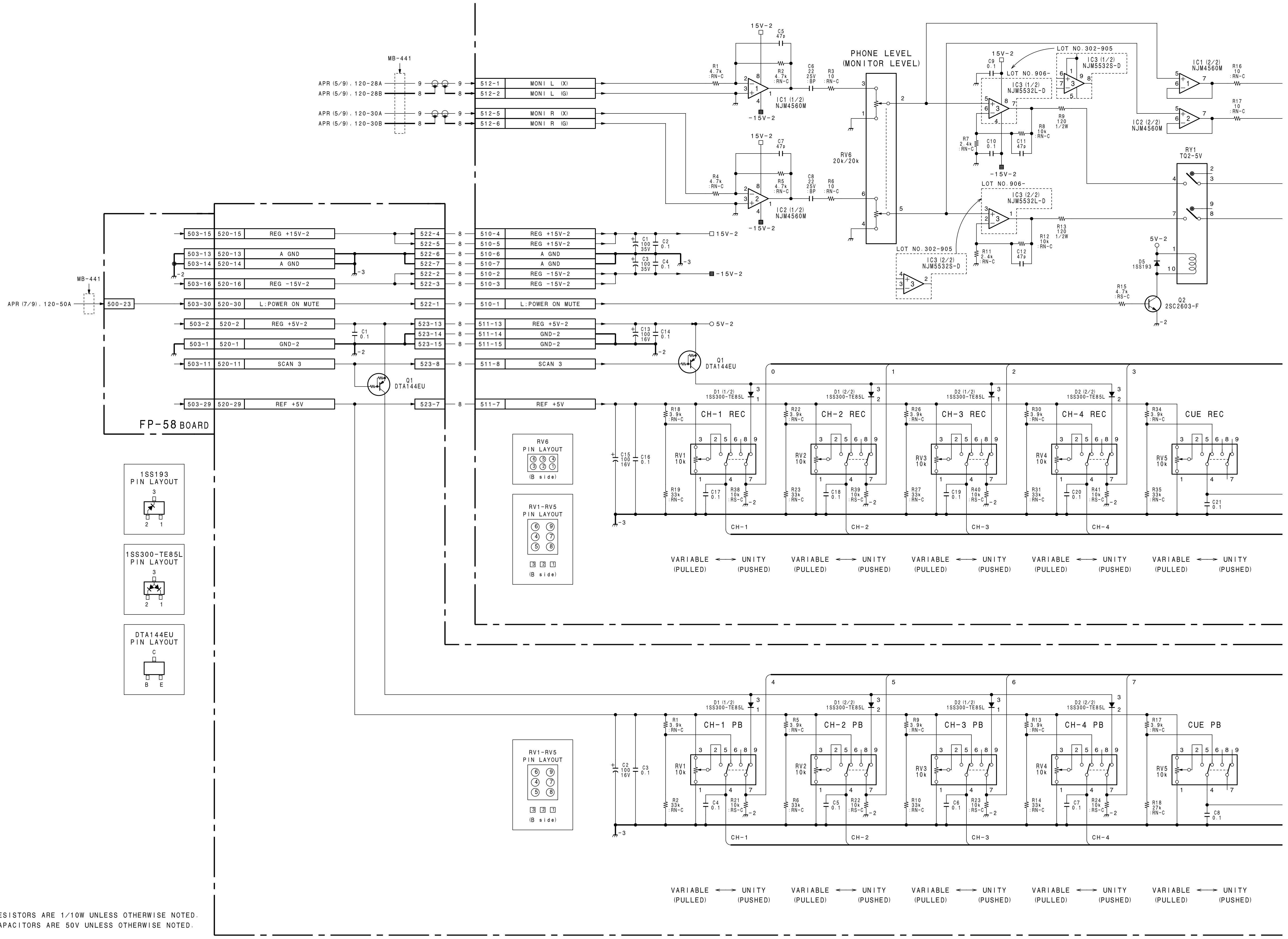

NOTE:
ALL RESISTORS ARE 1/10W UNLESS OTHERWISE NOTED.
ALL CAPACITORS ARE 50V UNLESS OTHERWISE NOTED.

A B C D E F G H

The Ref.Nos.marked with ★★ on the schematic diagram in this page are not printed on the printed circuit board (of the following board No.) with silk screen.
VR-152 BOARD : 1-648-552-11

LOT NO.	BOARD NO.	
	VR-152	VR-153
302-306	1-648-552-11	1-648-553-11
307-402	1-648-552-12	1-648-553-12
403-	1-648-552-13	

1
2
3
4
5

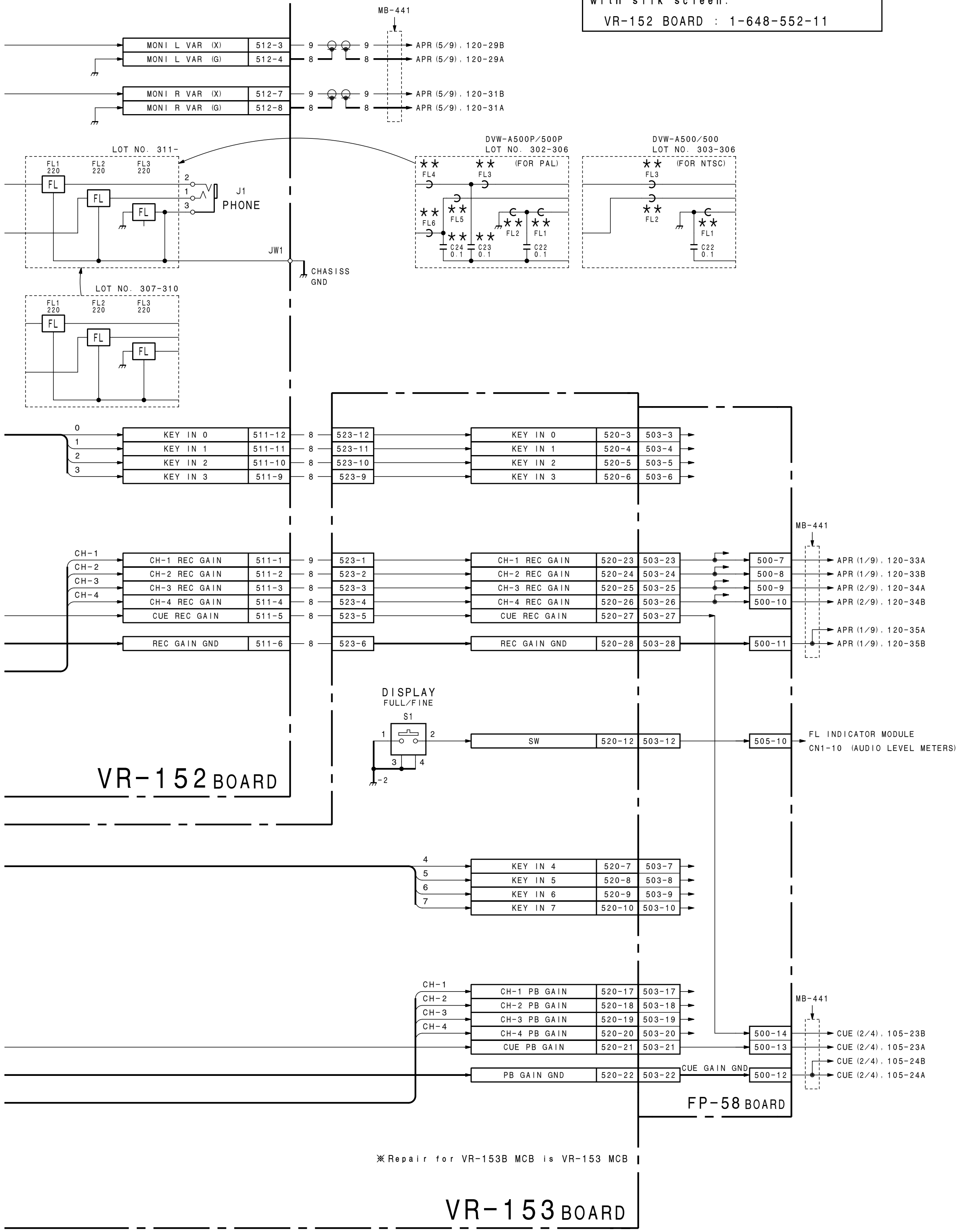

Audio REC Level VRs, Phone Level VR, Phone Connector

VR-152 BOARD

BOARD NO. 1-648-552-11, 12, 13
BOARD'S LOT NO. 302-
DVW-A500 (J, UC) :VR-152 MCB
DVW-A500P (EK) :VR-152 MCB
DVW-A500P (UC) :VR-152 MCB
DVW-500 (J, UC) :VR-152 MCB
DVW-500P (EK) :VR-152 MCB
DVW-500P (UC) :VR-152 MCB

Audio PB Level VRs,

VR-153 BOARD

BOARD NO. 1-648-553-11, 12
BOARD'S LOT NO. 302-
DVW-A500 (J, UC) :VR-153 MCB
DVW-A500P (EK) :VR-153 MCB
DVW-A500P (UC) :VR-153 MCB
DVW-500 (J, UC) :VR-153 MCB
DVW-500P (EK) :VR-153 MCB
DVW-500P (UC) :VR-153 MCB

DVW-VR152-ALL-REC-S/M-04

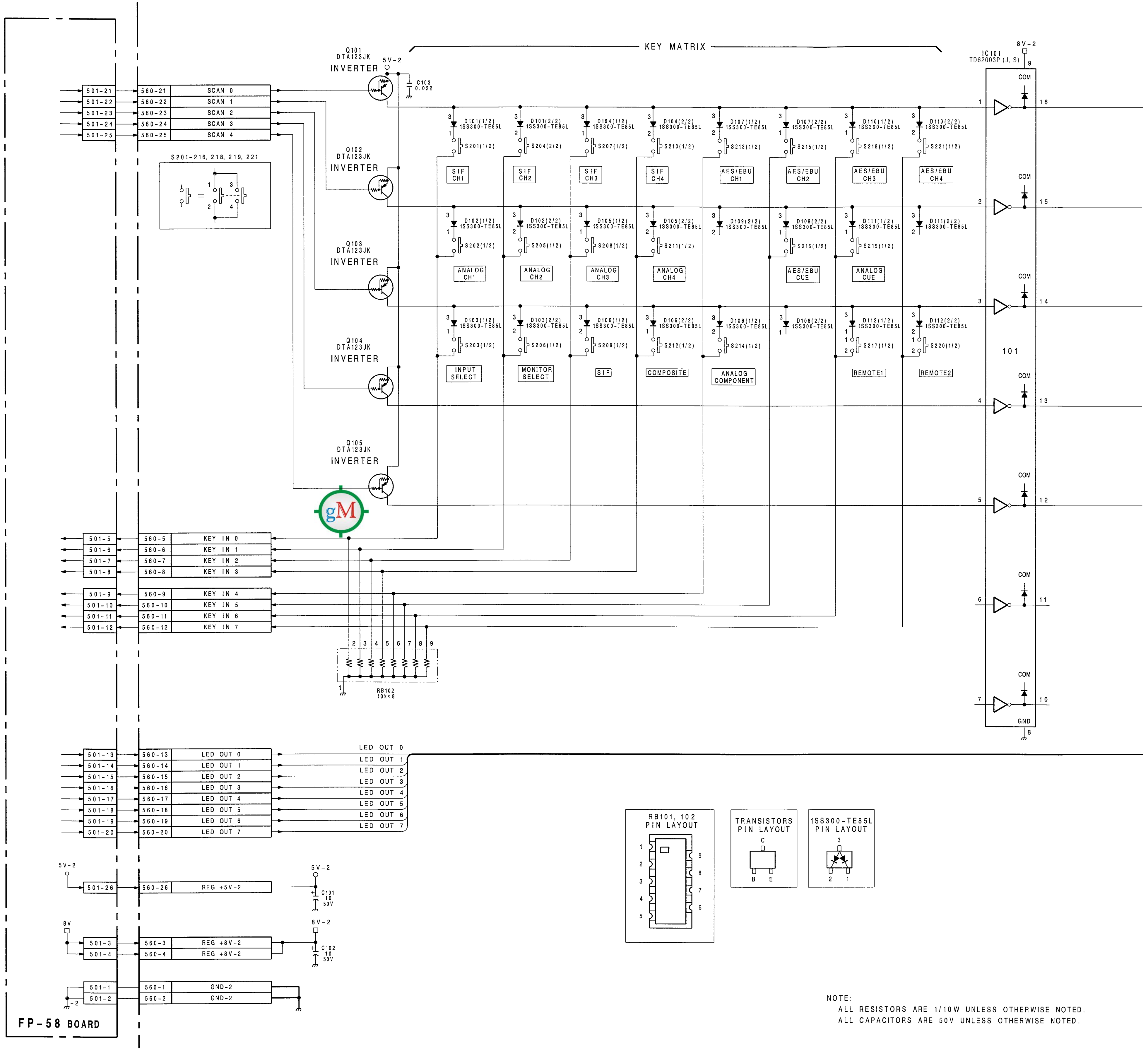

NOTE:
ALL RESISTORS ARE 1/10W UNLESS OTHERWISE NOTED.
ALL CAPACITORS ARE 50V UNLESS OTHERWISE NOTED.

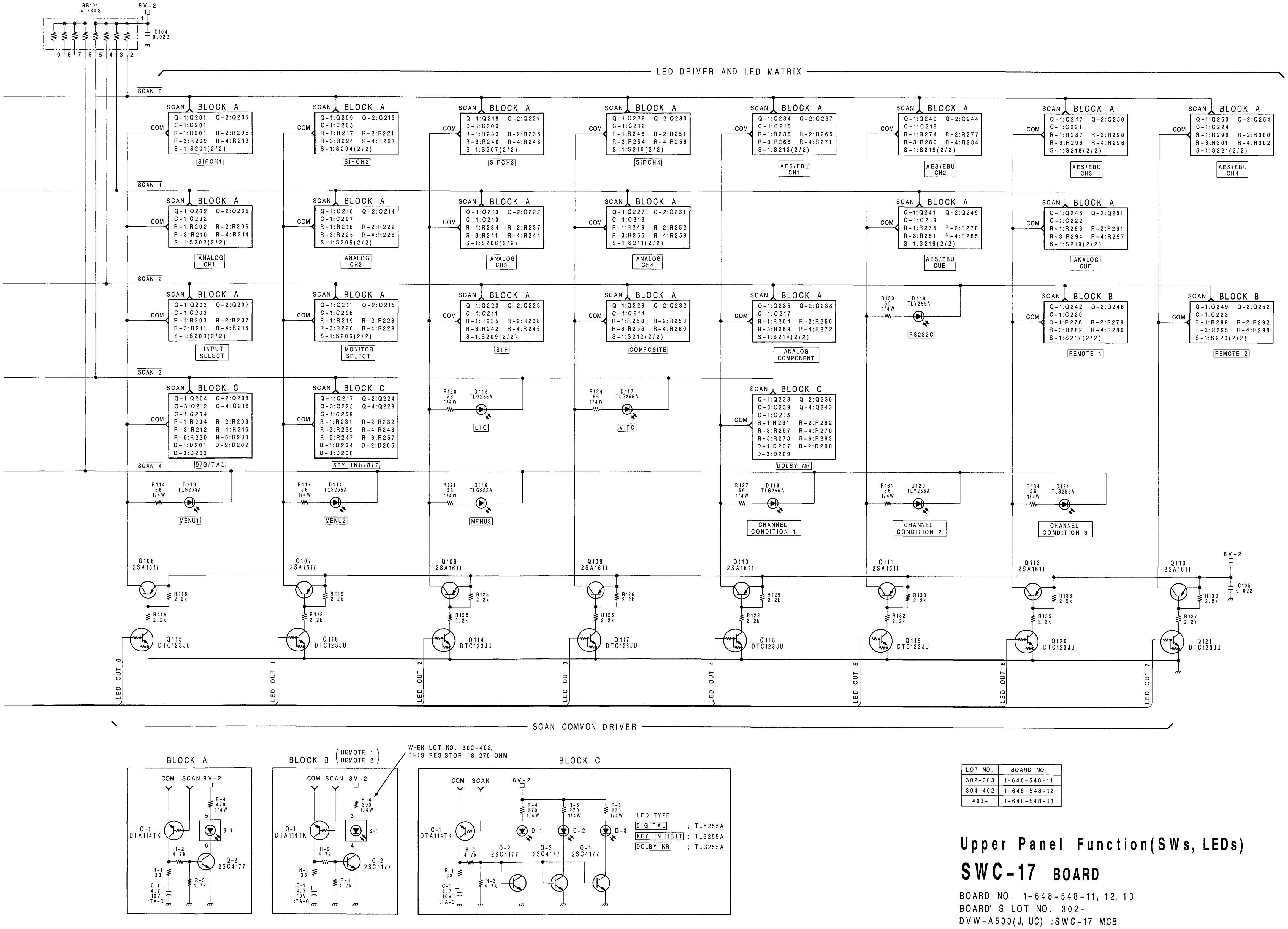

LOT NO.	BOARD NO.
302-303	1-648-548-11
304-402	1-648-548-12
403-	1-648-548-13

Upper Panel Function(SWs, LEDs)

SWC-17 BOARD

BOARD NO. 1-648-548-11, 12, 13
BOARD' S LOT NO. 302-
DVW-A500(J, UC) :SWC-17 MCB
DVW-A500P(EK) :SWC-17 MCB
DVW-A500P(UC) :SWC-17 MCB
DVW-500 (J, UC) :SWC-17 MCB
DVW-500P (EK) :SWC-17 MCB
DVW-500P (UC) :SWC-17 MCB
DVW-SWC17-ALL-REC-S/M-04

 SWC-18

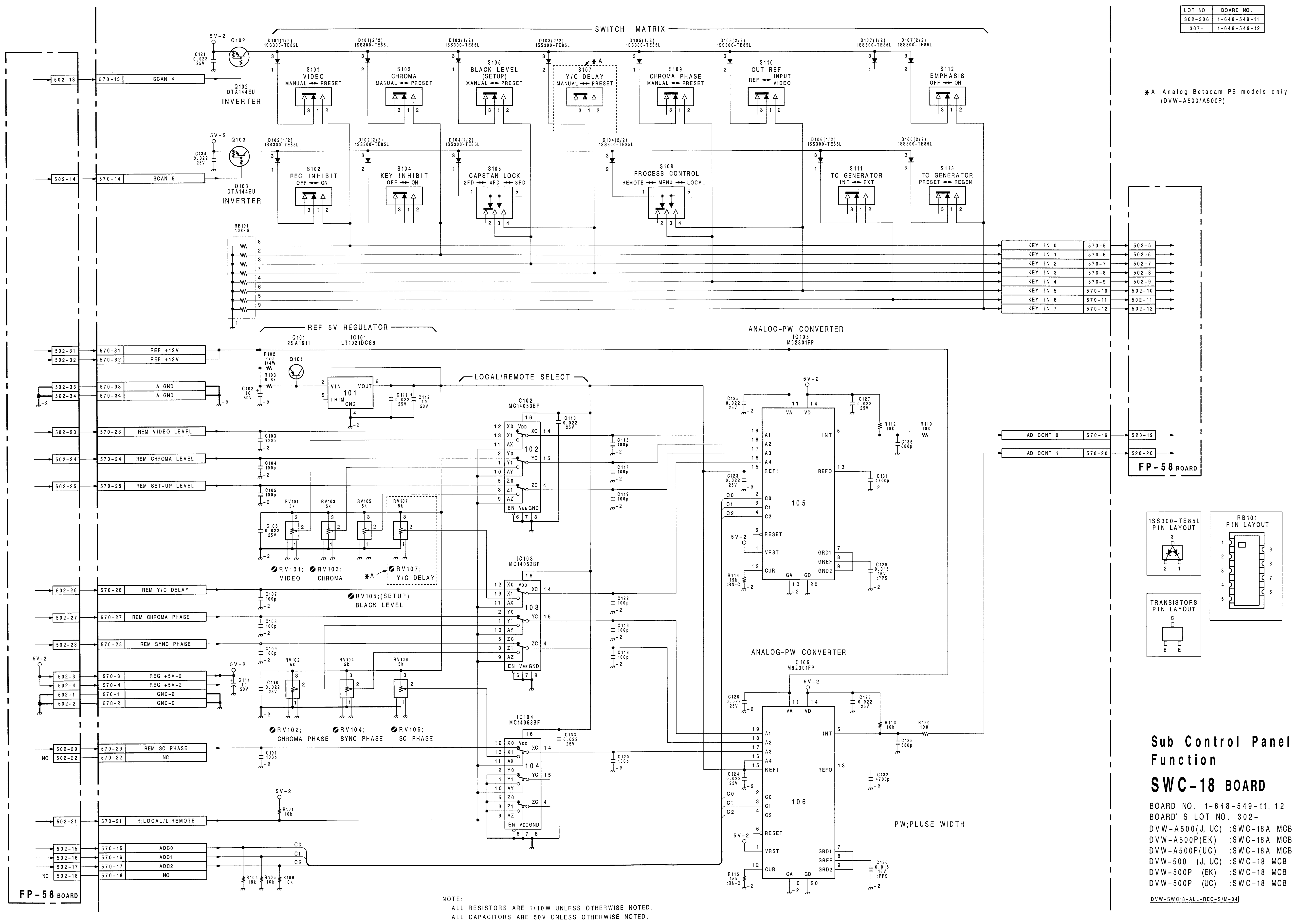

SWITCH MATRIX
S101 VIDEO MANUAL ◄► PRESET
S103 CHROMA MANUAL ◄► PRESET
S106 BLACK LEVEL (SETUP) MANUAL ◄► PRESET
S107 Y/C DELAY MANUAL ◄► PRESET
S109 CHROMA PHASE MANUAL ◄► PRESET
S110 OUT REF REF ◄► INPUT VIDEO
S112 EMPHASIS OFF ◄► ON
S102 REC INHIBIT OFF ◄► ON
S104 KEY INHIBIT OFF ◄► ON
S105 CAPSTAN LOCK 2FD ◄► 4FD ◄► 8FD
S108 PROCESS CONTROL REMOTE ◄► MENU ◄► LOCAL
S111 TC GENERATOR INT ◄► EXT
S113 TC GENERATOR PRESET ◄► REGEN
Q102 DTA144EU INVERTER
Q103 DTA144EU INVERTER
SCAN 4
SCAN 5
KEY IN 0
KEY IN 1
KEY IN 2
KEY IN 3
KEY IN 4
KEY IN 5
KEY IN 6
KEY IN 7
REF 5V REGULATOR
Q101 2SA1611
IC101 LT1021DCS8
LOCAL/REMOTE SELECT
IC102 MC14053BF
IC103 MC14053BF
IC104 MC14053BF
ANALOG-PW CONVERTER IC105 M62301FP
ANALOG-PW CONVERTER IC106 M62301FP
REF +12V
A GND
REM VIDEO LEVEL
REM CHROMA LEVEL
REM SET-UP LEVEL
REM Y/C DELAY
REM CHROMA PHASE
REM SYNC PHASE
REG +5V-2
GND-2
REM SC PHASE
NC
H;LOCAL/L;REMOTE
ADC0
ADC1
ADC2
AD CONT 0
AD CONT 1
RV101; VIDEO
RV103; CHROMA
RV105;(SETUP) BLACK LEVEL
RV107; Y/C DELAY
RV102; CHROMA PHASE
RV104; SYNC PHASE
RV106; SC PHASE
FP-58 BOARD
*A ;Analog Betacam PB models only (DVW-A500/A500P)
LOT NO. | BOARD NO.
302-306 | 1-648-549-11
307- | 1-648-549-12
1SS300-TE85L PIN LAYOUT
RB101 PIN LAYOUT
TRANSISTORS PIN LAYOUT
PW;PLUSE WIDTH
NOTE:
ALL RESISTORS ARE 1/10W UNLESS OTHERWISE NOTED.
ALL CAPACITORS ARE 50V UNLESS OTHERWISE NOTED.
Sub Control Panel Function
SWC-18 BOARD
BOARD NO. 1-648-549-11, 12
BOARD' S LOT NO. 302-
DVW-A500(J, UC) :SWC-18A MCB
DVW-A500P(EK) :SWC-18A MCB
DVW-A500P(UC) :SWC-18A MCB
DVW-500 (J, UC) :SWC-18 MCB
DVW-500P (EK) :SWC-18 MCB
DVW-500P (UC) :SWC-18 MCB
DVW-SWC18-ALL-REC-S/M-04

 SWC-19 (1/2)

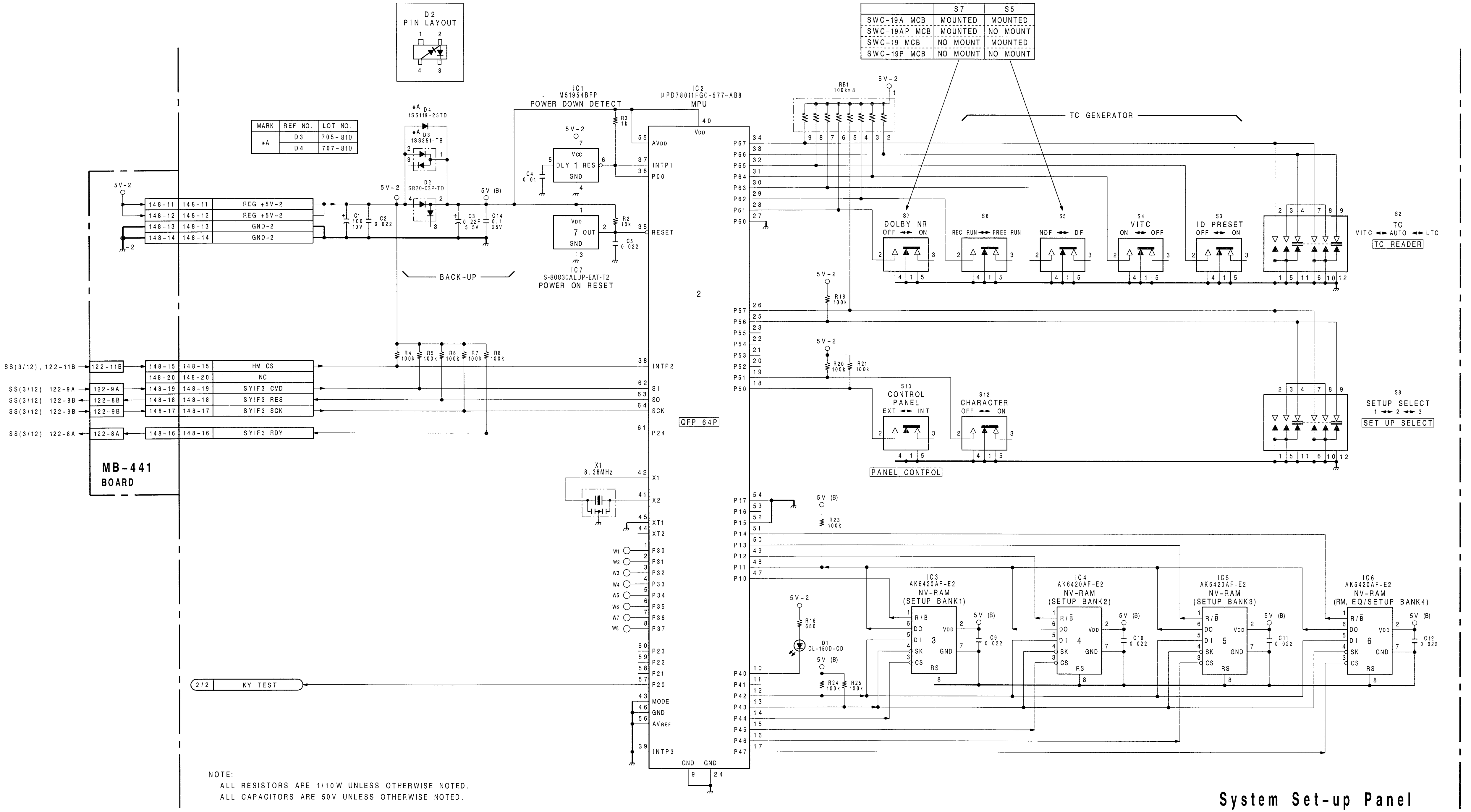

	S7	S5
SWC-19A MCB	MOUNTED	MOUNTED
SWC-19AP MCB	MOUNTED	NO MOUNT
SWC-19 MCB	NO MOUNT	MOUNTED
SWC-19P MCB	NO MOUNT	NO MOUNT

MARK	REF NO.	LOT NO.
★A	D3	705-810
	D4	707-810

LOT NO.	BOARD NO.
302-306	1-648-550-11
307-402	1-648-550-12
403-704	1-648-550-13
705-	1-648-550-14

System Set-up Panel Function Control

SWC-19 BOARD (1/2)

BOARD NO. 1-648-550-11, 12, 13, 14
BOARD'S LOT NO. 302-
DVW-A500(J, UC) :SWC-19A MCB
DVW-A500P(EK) :SWC-19AP MCB
DVW-A500P(UC) :SWC-19AP MCB
DVW-500 (J, UC) :SWC-19 MCB
DVW-500P (EK) :SWC-19P MCB
DVW-500P (UC) :SWC-19P MCB

DVW-SWC19-ALL-REC-S/M-05

 KY-231, DP-176, PTC-69, SWC-19 (2/2)

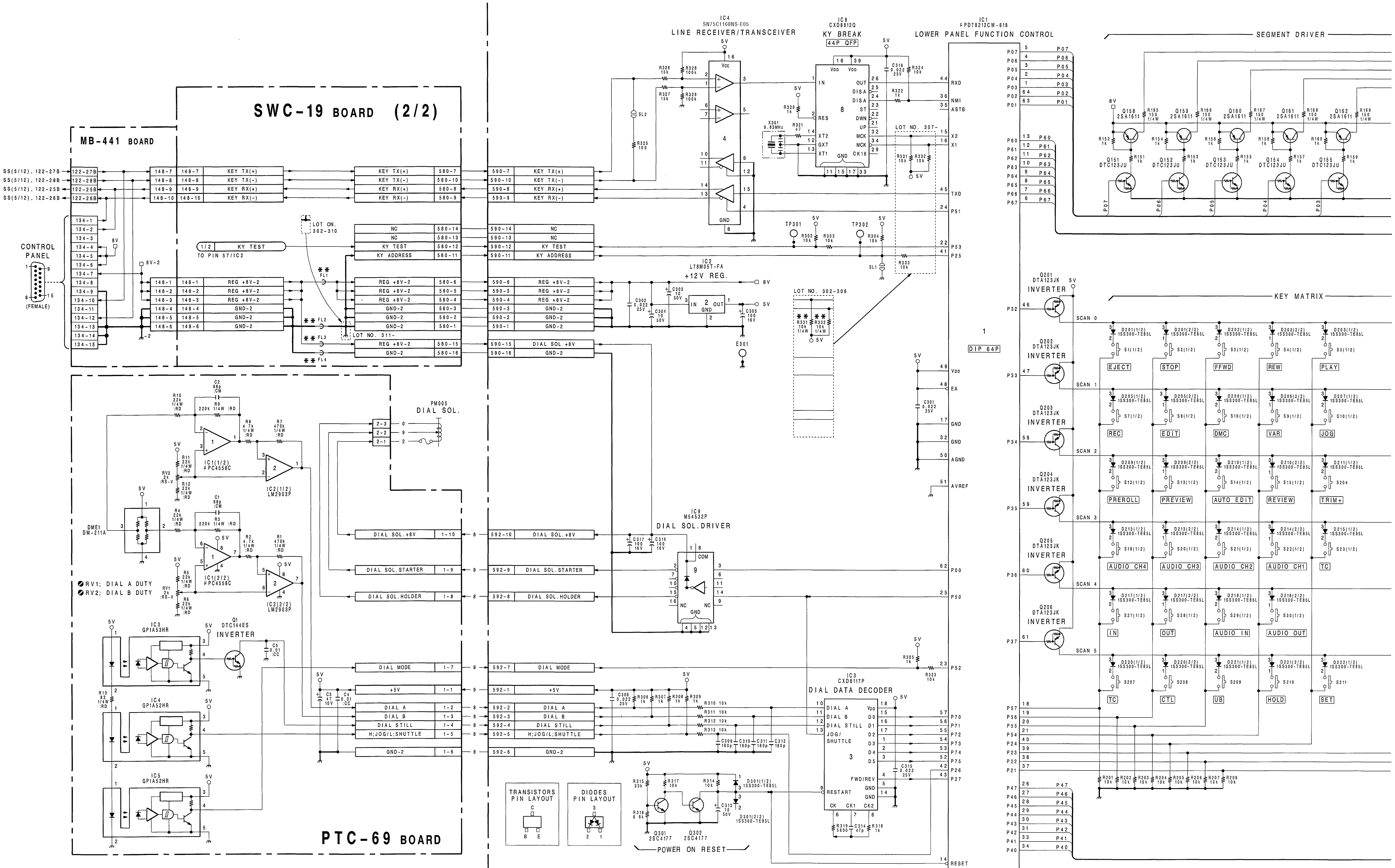

NOTE;
ALL RESISTORS ARE 1/10W UNLESS OTHERWISE NOTED.
ALL CAPACITORS ARE 50V UNLESS OTHERWISE NOTED.

http://getMANUAL.com

 KY-231, DP-176, PTC-69, SWC-19 (2/2)

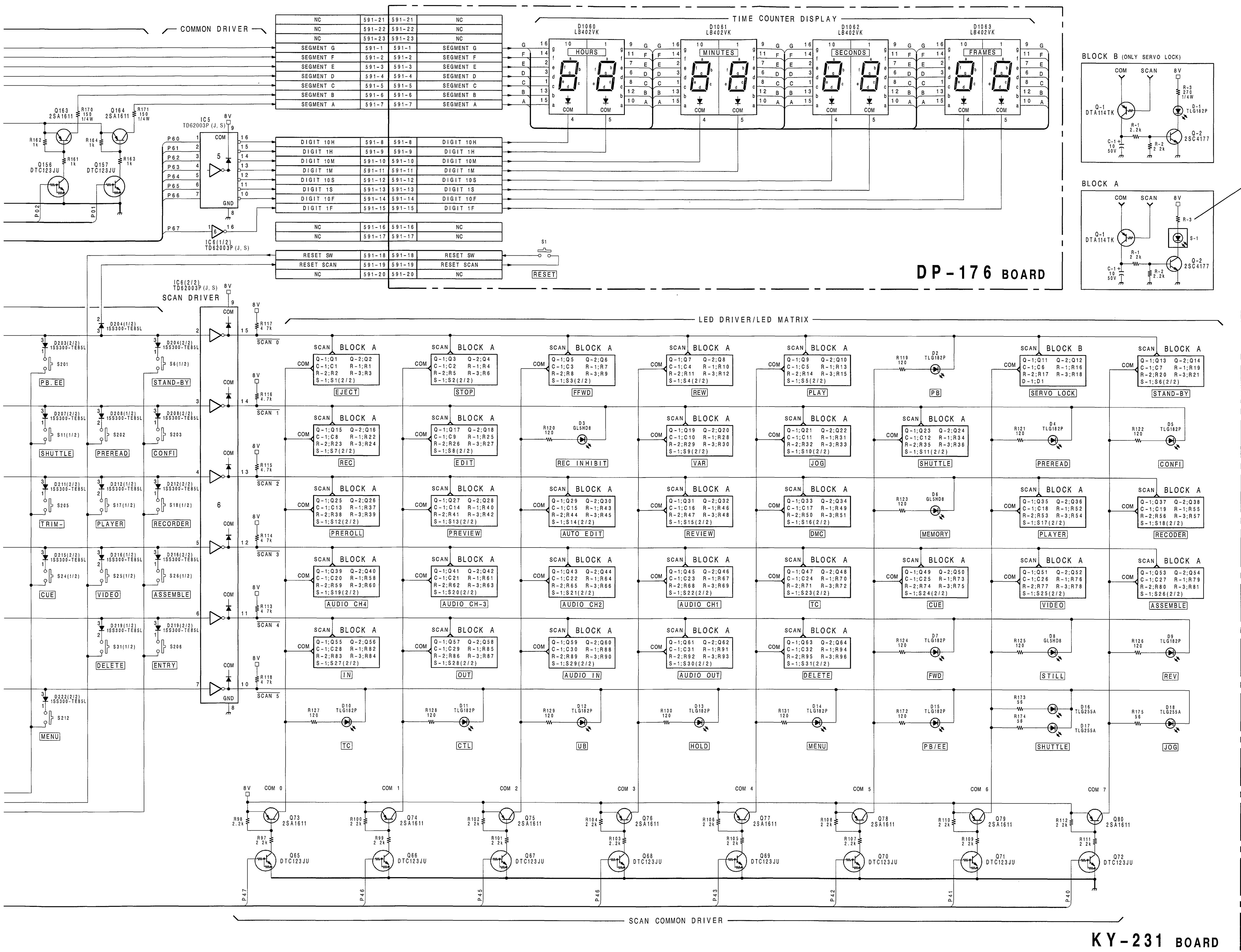

The Ref.Nos.marked with ** on the schematic diagram in this page are not printed on the printed circuit boards (of the following board No.) with silk screen.

KY-231 BOARD : 1-648-546-11
SWC-19 BOARD : 1-648-550-11

LOT NO.	BOARD NO.		
	KY-231	DP-176	SWC-19
302-306	1-648-546-11	1-648-547-11	1-648-550-11
307-402	1-648-546-12	1-648-547-12	1-648-550-12
403-704	1-648-546-13	1-648-547-12	1-648-550-13
705-	1-648-546-13	1-648-547-12	1-648-550-14

REF NO	LOT NO.	
	302-402	403-
R3, 6	120	270 1/4W
R9, 12, R15, 21	120	330 1/4W
R24	220 1/4W	270 1/4W
R27	120	330 1/4W
R30, 33, R36	180 1/4W	390 1/4W
R39, 42	120	330 1/4W
R45	220 1/4W	270 1/4W
R48	120	330 1/4W
R51, 54, R57, 60, R63, 66, R69, 72, R75, 78, R81, 84, R87, 90, R93, 96	180 1/4W	390 1/4W

Time Counter Display

DP-176 BOARD

BOARD NO. 1-648-547-11, 12
BOARD' S LOT NO. 302-
DVW-A500(J, UC) :DP-176 MCB
DVW-A500P(EK) :DP-176 MCB
DVW-A500P(UC) :DP-176 MCB
DVW-500 (J, UC) :DP-176 MCB
DVW-500P (EK) :DP-176 MCB
DVW-500P (UC) :DP-176 MCB

Jog/Shuttle Dial Sensor

PTC-69 BOARD

BOARD NO. 1-648-568-11, 12
ALL DVWs :PTC-69 MCB

Connection

SWC-19 BOARD (2/2)

BOARD NO. 1-648-550-11, 12, 13, 14
BOARD' S LOT NO. 302-
DVW-A500(J, UC) :SWC-19A MCB
DVW-A500P(EK) :SWC-19AP MCB
DVW-A500P(UC) :SWC-19AP MCB
DVW-500 (J, UC) :SWC-19 MCB
DVW-500P (EK) :SWC-19P MCB
DVW-500P (UC) :SWC-19P MCB

Lower Panel Control

KY-231 BOARD

BOARD NO. 1-648-546-11, 12, 13
BOARD' S LOT NO. 302-
DVW-A500(J, UC) :KY-231 MCB
DVW-A500P(EK) :KY-231 MCB
DVW-A500P(UC) :KY-231 MCB
DVW-500 (J, UC) :KY-231 MCB
DVW-500P (EK) :KY-231 MCB
DVW-500P (UC) :KY-231 MCB

DVW-KY231-ALL-REC-S/M-05

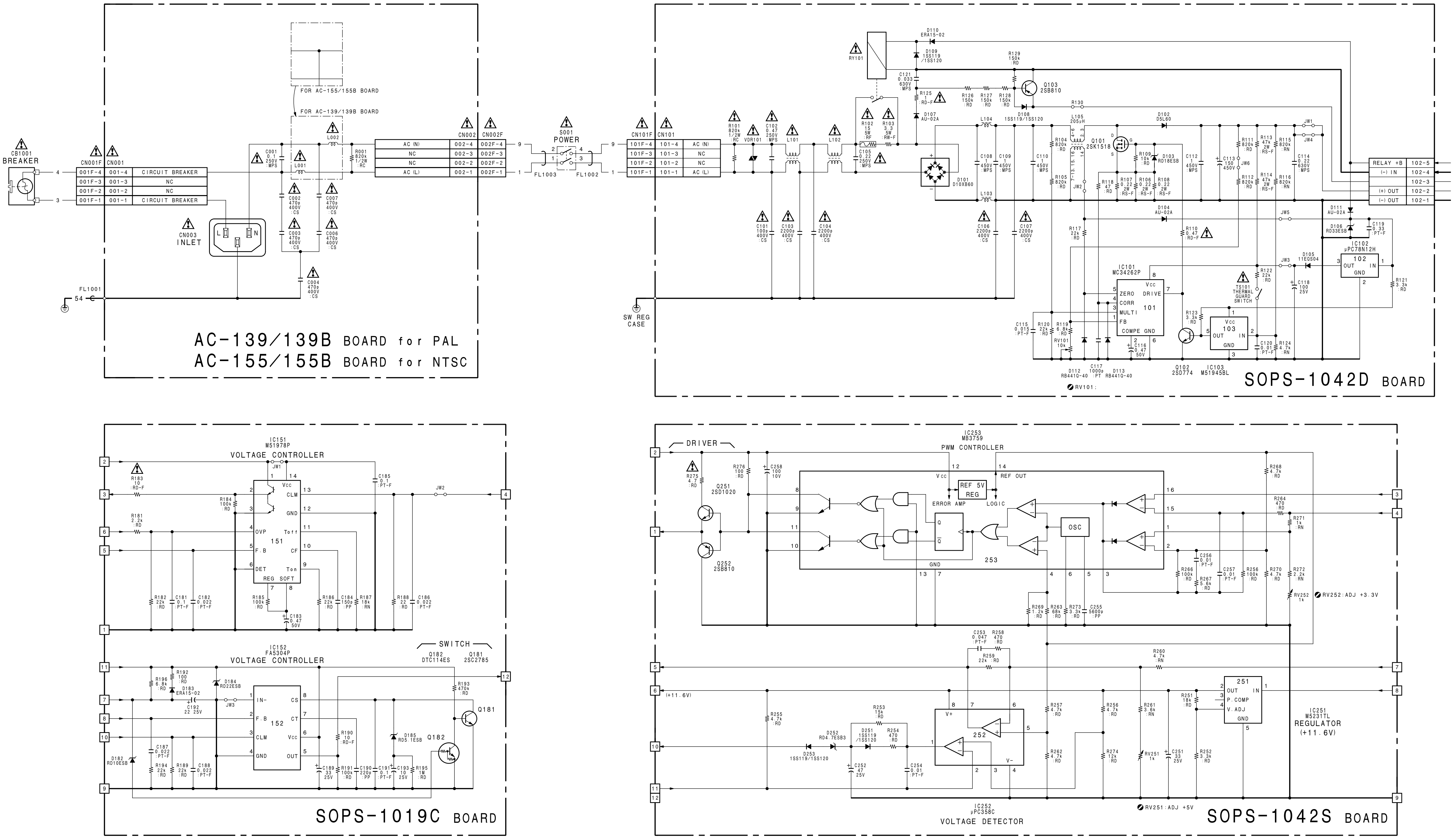

NOTE:
ALL RESISTORS ARE 1/4W UNLESS OTHERWISE NOTED.
ALL CAPACITORS ARE 50V UNLESS OTHERWISE NOTED.

A B C D E F G H

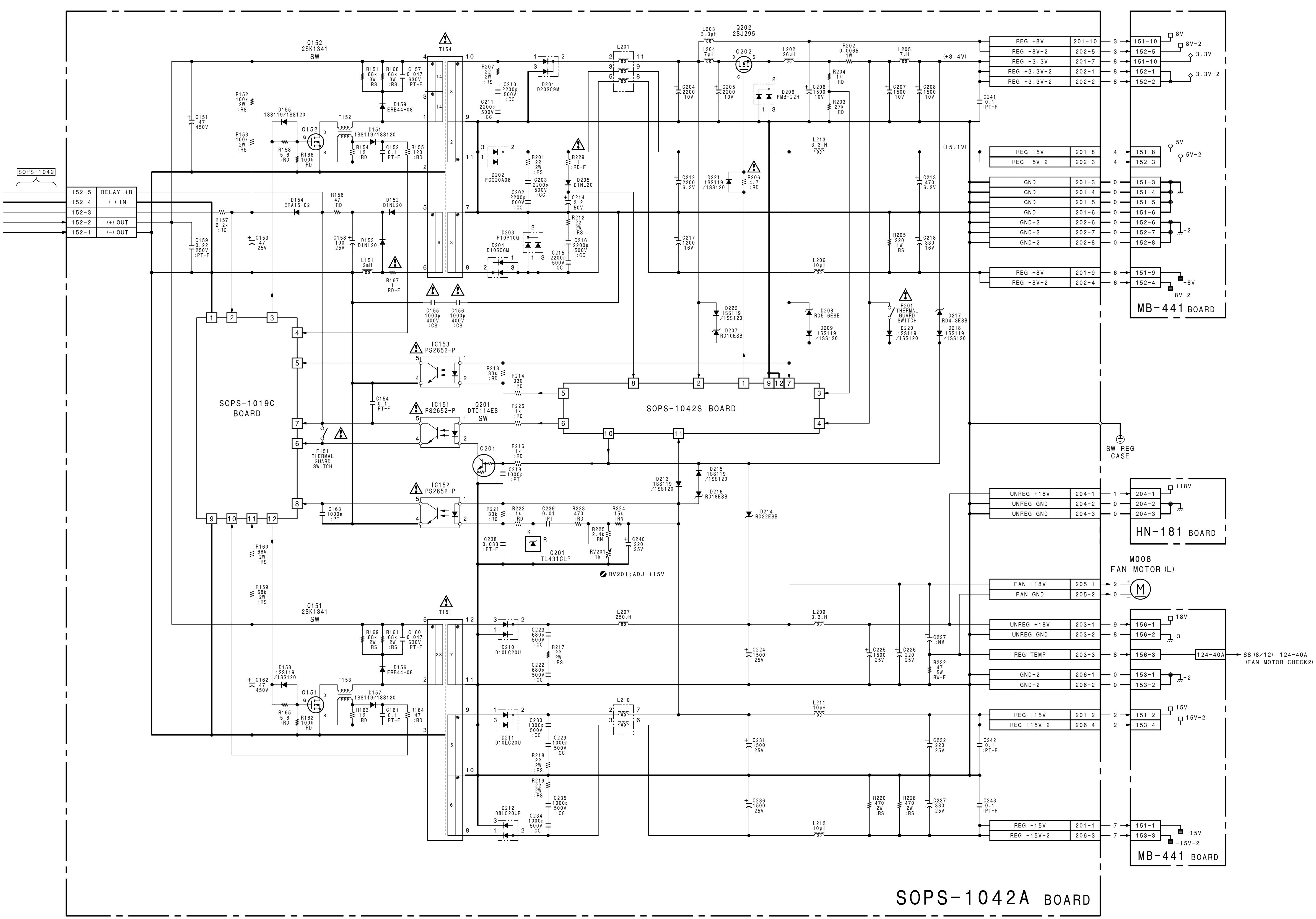

Switching Regulater
SOPS-1042 (A)

DVW ALL MODELS

SOPS-1019C BOARD
BOARD NO. 1-640-835-11

SOPS-1042A BOARD
BOARD NO. 1-648-404-11

SOPS-1042D BOARD
BOARD NO. 1-656-244-11, 12

SOPS-1042S BOARD
BOARD NO. 1-648-406-11

AC Connector Board, With Breaker
AC-139/139B BOARD

BOARD NO. 1-648-557-11/21
BOARD'S LOT NO. 302-
DVW-A500P (EK) :AC-139 MCB
DVW-A500P (UC) :AC-139 MCB
DVW-500P (EK) :AC-139 MCB
DVW-500P (UC) :AC-139 MCB
DVW-A510P (EK) :AC-139B MCB
DVW-510P (EK) :AC-139B MCB
DVW-CA510P (EK) :AC-139B MCB
Repair for AC-139B MCB is AC-139 MCB

AC Connector Board, With Breaker
AC-155/155B BOARD

BOARD NO. 1-648-887-11/21
BOARD'S LOT NO. 302-
DVW-A500 (J, UC) :AC-155 MCB
DVW-500 (J, UC) :AC-155 MCB
DVW-A510 (J, UC) :AC-155B MCB
DVW-510 (J, UC) :AC-155B MCB
DVW-CA510 (J, UC) :AC-155B MCB
Repair for AC-155B MCB is AC-155 MCB

DVW-SOPS1042-ALL-ALL-S/M-04-B

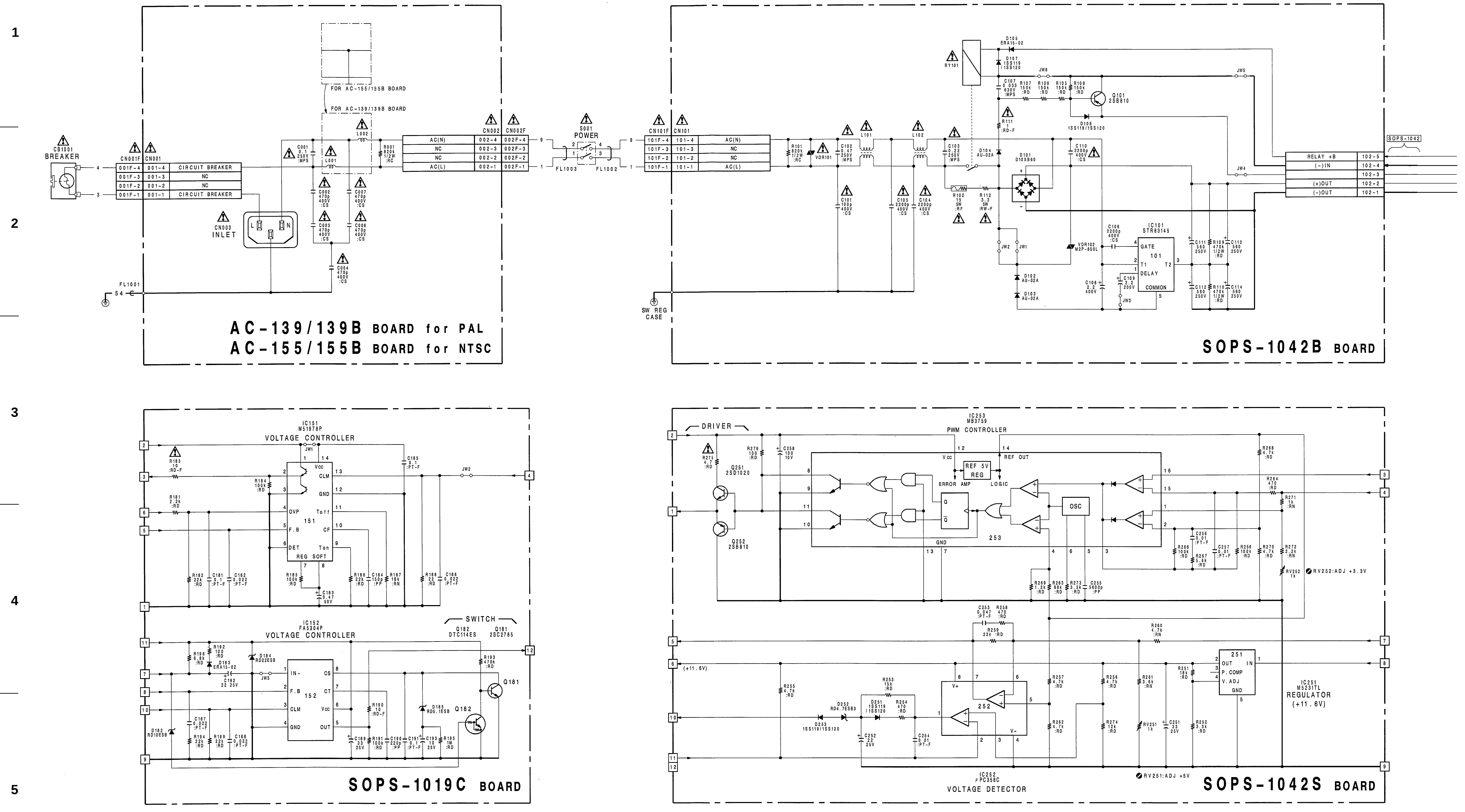

NOTE:
ALL RESISTORS ARE 1/4W UNLESS OTHERWISE NOTED.
ALL CAPACITORS ARE 50V UNLESS OTHERWISE NOTED.

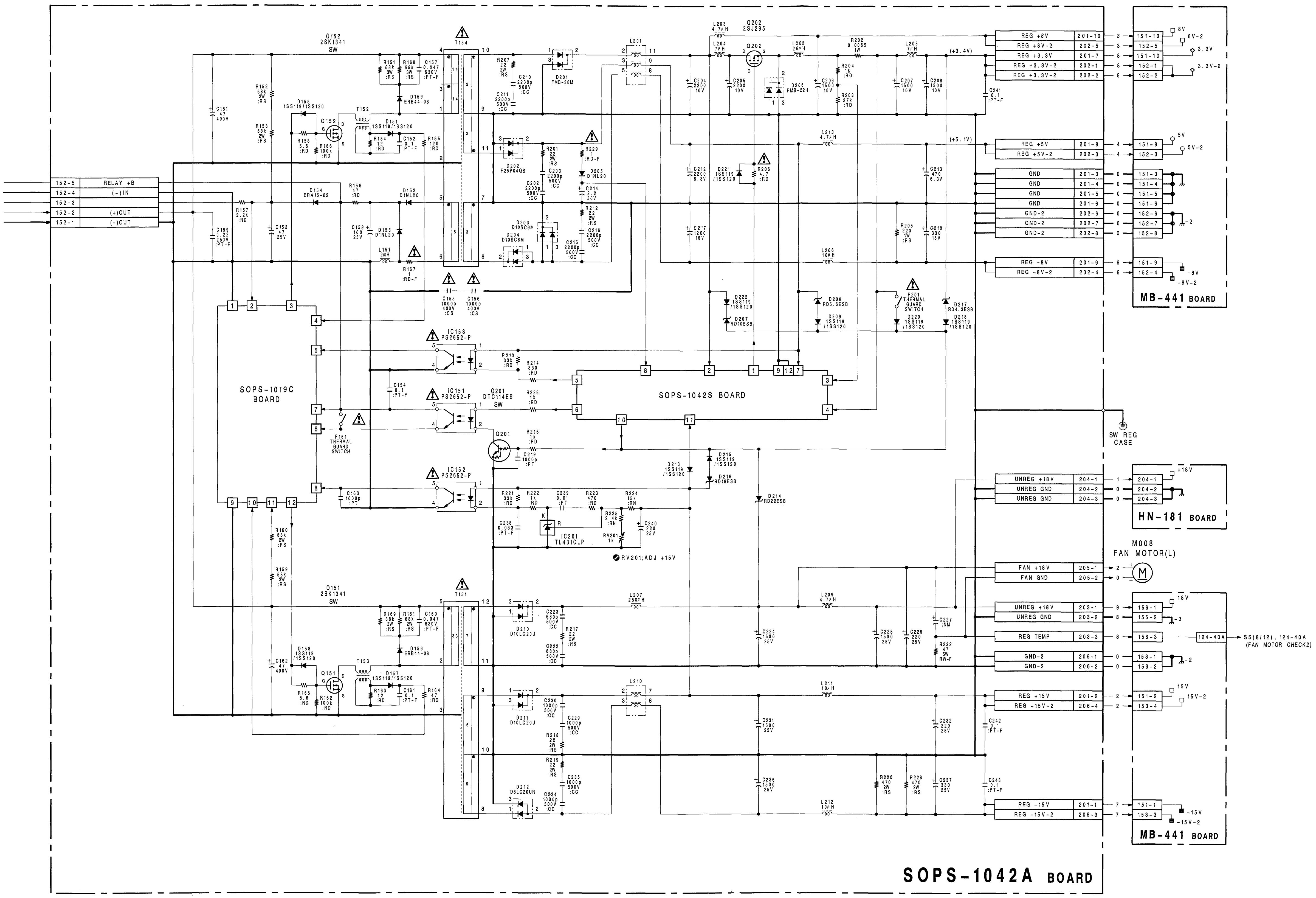

1
2
3
4
5

Switching Regurater

SOPS-1042

DVW ALL MODELS

SOPS-1019C BOARD

BOARD NO. 1-640-835-11

SOPS-1042A BOARD

BOARD NO. 1-648-404-11

SOPS-1042B BOARD

BOARD NO. 1-648-405-11

SOPS-1042S BOARD

BOARD NO. 1-648-406-11

AC Connector Board with Breaker

AC-139/139B BOARD

BOARD NO. 1-648-557-11/21
BOARD'S LOT NO. 302-
DVW-A500P (EK) :AC-139 MCB
DVW-A500P (UC) :AC-139 MCB
DVW-500P (EK) :AC-139 MCB
DVW-500P (UC) :AC-139 MCB
DVW-A510P (EK) :AC-139B MCB
DVW-510P (EK) :AC-139B MCB
DVW-CA510P(EK) :AC-139B MCB
Repair for AC-139B MCB is AC-139 MCB

AC Connector Board with Breaker

AC-155/155B BOARD

BOARD NO. 1-648-887-11/21
BOARD'S LOT NO. 302-
DVW-A500 (J, UC) :AC-155 MCB
DVW-500 (J, UC) :AC-155 MCB
DVW-A510 (J, UC) :AC-155B MCB
DVW-510 (J, UC) :AC-155B MCB
DVW-CA510(J, UC) :AC-155B MCB
Repair for AC-155B MCB is AC-155 MCB

DVW-SOPS1042-ALL-ALL-S/M-04-A

MB-441 BOARD SHEET No.	MB-441 BOARD REF. No.	CONNECTION	
(1/6)	CN100	DEC-65	BKDW-505/506
	CN101	TBC-23	DVW-A500/A500P ONLY (MB-441A MCB)
	CN102	TBC-24	
	CN103	DM-89	
	CN104	AP-28	
(2/6)	CN105	CUE-1AP/1A/1	
	CN106	EQ-45A/45	
	CN110 CN112	DIF-16	
(3/6)	CN113 CN114 CN115	VPR-1	
(4/6)	CN116 CN117 CN118	DPR-36	
(5/6)	CN119 CN120 CN121	APR-1	
(6/6)	CN122 CN123 CN124	SS-52A/52	
	CN130	RS232C CONNECTOR	
(5/6)	CN131	VIDEO CONTROL CONNECTOR	
(6/6)	CN132	REMOTE 1 IN(9P) CONNECTOR	
	CN133	REMOTE 1 OUT(9P) CONNECTOR	
	CN134	CONTROL PANEL CONNECTOR	
(3/6)	CN135 CN136	CP-218	(CN412) (CN413)
(5/6)	CN137	CP-220	(CN404)
(1/6)	CN138 CN139	CP-218	(CN414) (CN415)
(2/6)	CN140	CP-220	(CN402)
(5/6)	CN142 CN143 CN144		(CN400) (CN401) (CN403)
	CN145	VR-152	(CN512)
	CN147	FP-58	(CN500)
(6/6)	CN148	SWC-19	(CN148)
	CN149	HN-181	(CN201)
	CN150	FAN MOTOR(R)	
	CN151 CN152 CN153	SWITCHING REGULATOR	(CN201) (CN202) (CN206)
	CN154	HN-181	(CN205)
	CN155	NO CONNECTION	
	CN156	SWITCHING REGULATOR	(CN203)
(1/6)	CN160	CN161 OF MB-441	
	CN161	CN160 OF MB-441	

FOR **DEC-65** BOARD(OPTION:BKDW-505/506)

	DEC BOARD SHEET No.	CN100 A		CN100 B	DEC BOARD SHEET No.	
	(1/2)	GND	1	GND	(1/2)	
	(1/2)	GND	2	GND	(1/2)	
8V	(1/2)	REG +8V	3	REG +8V	(1/2)	8V
-8V	(1/2)	REG -8V	4	REG -8V	(1/2)	-8V
5V	(1/2)	REG +5V	5	REG +5V	(1/2)	5V
3.3V	(1/2)	REG +3.3V	6	REG +3.3V	(1/2)	3.3V
	(1/2)	NC	7	NC	(1/2)	
	(1/2)	NC	8	NC	(1/2)	
	(1/2)	NC	9	NC	(1/2)	
138-1	(1/2)	INPUT VIDEO(G)	10	INPUT VIDEO(X)	(1/2)	138-2
	(1/2)	NC	11	NC	(1/2)	
	(1/2)	GND	12	GND	(1/2)	
139-1	(1/2)	EVB CONT 1	13	NC	(1/2)	
139-2	(1/2)	EVB CONT 2	14	DEC PLL LOCK	(2/2)	114-23B
139-3	(1/2)	Y DEC(X)	15	NC	(1/2)	
139-4	(1/2)	Y DEC(G)	16	NC	(1/2)	
139-5	(1/2)	R-Y DEC(X)	17	NC	(1/2)	
139-6	(1/2)	R-Y DEC(G)	18	NC	(1/2)	
139-7	(1/2)	B-Y DEC(X)	19	NC	(1/2)	
139-8	(1/2)	B-Y DEC(G)	20	NC	(1/2)	
	(1/2)	GND	21	GND	(1/2)	
114-18B	(1/2)	L;POWER ON RESET	22	NC	(1/2)	
	(1/2)	NC	23	NC	(1/2)	
110-11A	(1/2)	DIF DEC JP0	24	DIF DEC JP1	(1/2)	110-11B
110-12A	(1/2)	DIF DEC JP2	25	NC	(1/2)	
110-1A	(2/2)	D2 DATA 0	26	D2 DATA 1	(2/2)	110-1B
110-2A	(2/2)	D2 DATA 2	27	D2 DATA 3	(2/2)	110-2B
110-3A	(2/2)	D2 DATA 4	28	D2 DATA 5	(2/2)	110-3B
110-4A	(2/2)	D2 DATA 6	29	D2 DATA 7	(2/2)	110-4B
110-5A	(2/2)	D2 DATA 8	30	D2 DATA 9	(2/2)	110-5B
110-7A	(2/2)	D2 CF0	31	D2 CF1	(2/2)	110-7B
110-8A	(2/2)	D2 CF2	32	D2 PARITY	(2/2)	110-8B
100-33B, 110-9A/9B	(2/2)	D2 GND	33	D2 GND	(2/2)	100-33A, 110-9A/9B
110-10B	(2/2)	D2 CK(G)	34	D2 CK(X)	(2/2)	110-10A
	(1/2)	NC	35	NC	(1/2)	
114-17A	(1/2)	DEC EVR DATA	36	DEC EVR CK	(1/2)	114-17B
114-18A	(1/2)	C 100/75	37	NC	(1/2)	
	(1/2)	NC	38	NC	(1/2)	
114-19A	(1/2)	MODE DATA	39	STATUS DATA	(2/2)	114-19B
114-20A	(1/2)	DD START	40	DD SCK	(1/2)	114-20B
114-21B	(1/2)	DEC LOAD	41	DEC DO	(1/2)	114-22B
	(1/2)	NC	42	NC	(1/2)	
114-14A	(2/2)	FR RST	43	CF RST	(2/2)	114-14B
114-15A	(2/2)	EXT 4FSC(G)	44	EXT 4FSC(X)	(2/2)	114-15B
	(1/2)	NC	45	NC	(1/2)	
100-46B, 114-5A/5B	(2/2)	DEC GND	46	DEC GND	(2/2)	100-46A, 114-5A/5B
114-6A	(2/2)	DEC DATA 0	47	DEC DATA 1	(2/2)	114-6B
114-7A	(2/2)	DEC DATA 2	48	DEC DATA 3	(2/2)	114-7B
114-8A	(2/2)	DEC DATA 4	49	DEC DATA 5	(2/2)	114-8B
114-9A	(2/2)	DEC DATA 6	50	DEC DATA 7	(2/2)	114-9B
114-10A	(2/2)	DEC DATA 8	51	DEC DATA 9	(2/2)	114-10B
114-11A	(2/2)	DEC HD	52	DEC VD	(2/2)	114-11B
114-12A	(2/2)	DEC CF INFO	53	DEC PARITY	(2/2)	114-12B
114-13A	(2/2)	DEC CK(G)	54	DEC CK(X)	(2/2)	114-13B
	(1/2)	NC	55	NC	(1/2)	
	(1/2)	NC	56	NC	(1/2)	
15V	(1/2)	REG +15V	57	REG +15V	(1/2)	15V
-15V	(1/2)	REG -15V	58	REG -15V	(1/2)	-15V
	(1/2)	GND	59	GND	(1/2)	
	(1/2)	GND	60	GND	(1/2)	

CN138

100-10A	INPUT VIDEO(G)	1	8
100-10B	INPUT VIDEO(X)	2	9 — CP-218, 414-2
	GND	3	8 — CP-218, 414-3
8V	REG -8V	4	8 — CP-218, 414-4
-8V	REG +8V	5	8 — CP-218, 414-5

CN139

100-13A	EVB CONT 1	1	9 — CP-218, 415-1
100-14A	EVB CONT 2	2	8 — CP-218, 415-2
100-15A	Y DEC(X)	3	9 — CP-218, 415-3
100-16A	Y DEC(G)	4	8
100-17A	R-Y DEC(X)	5	9 — CP-218, 415-5
100-18A	R-Y DEC(G)	6	8
100-19A	B-Y DEC(X)	7	9 — CP-218, 415-7
100-20A	B-Y DEC(G)	8	8

FOR **TBC-23** BOARD

	TBC BOARD SHEET No.	CN101 A		CN101 B	TBC BOARD SHEET No.	
	(5/5)	GND	1	GND	(5/5)	
	(5/5)	GND	2	GND	(5/5)	
8V	(5/5)	REG +8V	3	REG +8V	(5/5)	8V
-8V	(5/5)	REG -8V	4	REG -8V	(5/5)	-8V
5V	(5/5)	REG +5V	5	REG +5V	(5/5)	5V
3.3V	(5/5)	REG +3.3V	6	REG +3.3V	(5/5)	3.3V
102-7B	(1/5)	Y DATA 0	7	Y DATA 1	(1/5)	102-7A
102-8B	(1/5)	Y DATA 2	8	Y DATA 3	(1/5)	102-8A
102-9B	(1/5)	Y DATA 4	9	Y DATA 5	(1/5)	102-9A
102-10B	(1/5)	Y DATA 6	10	Y DATA 7	(1/5)	102-10A
102-11B	(1/5)	Y DATA 8	11	Y DATA 9	(1/5)	102211A
102-12B	(1/5)	Y WZ	12	Y GATED WCK	(1/5)	102-12A
102-13B	(1/5)	Y ADV WZ	13	Y WCLP	(1/5)	102-13A
102-14B	(1/5)	L;Y GUARD BAND	14	Y TBC PB SYNC	(1/5)	102-14A
102-15B	(1/5)	Y PDS CONT	15	Y SHW	(5/5)	102-15A
102-16B	(1/5)	Y SPD PWM	16	Y SDO	(1/5)	102-16A
102-44B	(1/5)	L;Y SDO PLS	17	VISC DET	(1/5)	102-17A
114-35B	(5/5)	H;H SHIFT	18	H;Y REF INS	(1/5)	103-18A
102-19A	(1/5)	L;F-BID	19	H;Y PEDESTAL INS	(1/5)	103-17A
123-10B	(1/5)	SERVO V	20	JUMP ID0	(5/5)	124-42A
123-11A	(1/5)	DT V	21	SCH TRACKING	(4/5)	102-21A
123-11B	(1/5)	PB O/E	22	PB V	(1/5)	102-22A
123-12A	(1/5)	L;REV/H;FWD	23	Y WRITE V	(1/5)	102-23A
123-12B	(1/5)	L;NOISELESS PB	24	TBC DIAG 1	(3/5)	102-24A
123-13A	(1/5)	L;DT	25	TBC DIAG 2	(3/5)	102-25A
123-13B	(5/5)	JUMP ID1	26	TBC DIAG 3	(3/5)	102-26A
124-42B	(5/5)	JUMP ID2	27	TBC DIAG 4	(3/5)	102-27A
102-46B	(1/5)	L;C SDO PLS	28	Y/C DL CONT	(3/5)	102-28A
114-34A	(5/5)	B-CAM CF INFO	29	C WRITE V	(1/5)	102-29A
123-14A	(1/5)	PB FP1	30	H;C PEDESTAL INS	(1/5)	103-17B
123-14B	(1/5)	PB FP2	31	H;C REF INS	(1/5)	103-18B
114-35A	(5/5)	H;V SHIFT	32	C SDO	(1/5)	102-32A
102-33B	(1/5)	C PDS CONT	33	C SHW	(1/5)	102-33A
102-34B	(1/5)	L;C GUARD BAND	34	C PB SYNC	(1/5)	102-34A
102-35B	(1/5)	C ADV WZ	35	C WCLP	(1/5)	102-35A
102-36B	(1/5)	C WZ	36	C GATED WCK	(1/5)	102-36A
102-37B	(1/5)	C DATA 0	37	C DATA 1	(1/5)	102-37A
102-38B	(1/5)	C DATA 2	38	C DATA 3	(1/5)	102-38A
102-39B	(1/5)	C DATA 4	39	C DATA 5	(1/5)	102-39A
102-40B	(1/5)	C DATA 6	40	C DATA 7	(1/5)	102-40A
102-41B	(1/5)	C DATA 8	41	C DATA 9	(1/5)	102-41A
122-13A	(3/5)	SYIF2 CMD	42	L;TBC CS	(3/5)	122-14B
122-13B	(3/5)	SYIF2 SCK	43	SYIF2 RDY	(3/5)	122-12A
122-12B	(3/5)	SYIF2 RES	44	L;SYS RESET	(3/5)	122-35A
115-46B	(3/5)	TBC VD	45	VISC Y(X)	(4/5)	113-11B
115-47A	(3/5)	TBC HD	46	VISC Y(G)	(4/5)	113-11A
113-22B	(3/5)	TBC 4FSC(X)	47	ANA $\overline{O}$/E	(1/5)	115-47B
113-22A	(3/5)	TBC 4FSC(G)	48	B-CAM CF	(3/5)	113-21B
114-27A/27B	(5/5)	TBC GND	49	B-CAM DATA 0	(5/5)	114-28A
114-28B	(5/5)	B-CAM DATA 1	50	B-CAM DATA 2	(5/5)	114-29A
114-29B	(5/5)	B-CAM DATA 3	51	B-CAM DATA 4	(5/5)	114-30A
114-30B	(5/5)	B-CAM DATA 5	52	B-CAM DATA 6	(5/5)	114-31A
114-31B	(5/5)	B-CAM DATA 7	53	B-CAM DATA 8	(5/5)	114-32A
114-32B	(5/5)	B-CAM DATA 9	54	B-CAM PARITY	(5/5)	114-34B
114-33B	(5/5)	B-CAM VD	55	B-CAM HD	(5/5)	114-33A
114-36B	(3/5)	TBC CK 27(X)	56	TBC CK 27(G)	(3/5)	114-36A
15V	(5/5)	REG +15V	57	REG +15V	(5/5)	15V
-15V	(5/5)	REG -15V	58	REG -15V	(5/5)	-15V
	(5/5)	GND	59	GND	(5/5)	
	(5/5)	GND	60	GND	(5/5)	

FOR TBC-24 BOARD

	TBC BOARD SHEET No.	CN102 A		CN102 B	TBC BOARD SHEET No.	
	(1/3)	GND	1	GND	(1/3)	
	(1/3)	GND	2	GND	(1/3)	
8V	(1/3)	REG +8V	3	REG +8V	(1/3)	8V
-8V	(1/3)	REG -8V	4	REG -8V	(1/3)	-8V
5V	(1/3)	REG +5V	5	REG +5V	(1/3)	5V
3.3V	(1/3)	REG +3.3V	6	REG +3.3V	(1/3)	3.3V
101-7B	(1/3)	Y DATA 1	7	Y DATA 0	(1/3)	101-7A
101-8B	(1/3)	Y DATA 3	8	Y DATA 2	(1/3)	101-8A
101-9B	(1/3)	Y DATA 5	9	Y DATA 4	(1/3)	101-9A
101-10B	(1/3)	Y DATA 7	10	Y DATA 6	(1/3)	101-10A
101-11B	(1/3)	Y DATA 9	11	Y DATA 8	(1/3)	101-11A
101-12B	(2/3)	Y GATED WCK	12	Y WZ	(2/3)	101-12A, 123-9A
101-13B	(1/3)	Y WCLP	13	Y ADV WZ	(2/3)	101-13A
101-14B	(2/3)	Y TBC PB SYNC	14	L;Y GUARD BAND	(2/3)	101-14A
101-15B	(2/3)	Y SHW	15	Y PDS CONT	(1/3)	101-15A
101-16B	(2/3)	Y SDO	16	Y SPD PWM	(2/3)	101-16A
101-17B	(1/3)	VISC DET	17	DM TBC SS JP0	(2/3)	103-48A, 123-15A
123-16A	(2/3)	ADV Y SW PLS	18	L;PB NO SIG	(2/3)	103-19B
101-19A	(1/3)	L;F-BID	19	Y W CLAMP PLS	(1/3)	103-19A
123-10B	(2/3)	SERVO V	20	TBC SPEED	(2/3)	103-20B
101-21B	(2/3)	SCH TRACKING	21	GND	(1/3)	
101-22B	(2/3)	PB V	22	GND	(1/3)	
101-23B	(2/3)	Y WRITE V	23	GND	(1/3)	
101-24B	(1/3)	TBC DIAG 1	24	GND	(1/3)	
101-25B	(1/3)	TBC DIAG 2	25	Y DEMOD(X)	(1/3)	103-26A
101-26B	(1/3)	TBC DIAG 3	26	Y DEMOD(G)	(1/3)	103-27A
101-27B	(1/3)	TBC DIAG 4	27	NC	(2/3)	
101-28B	(3/3)	Y/C DL CONT	28	C DEMOD(X)	(1/3)	103-28A
101-29B	(3/3)	C WRITE V	29	C DEMOD(G)	(1/3)	103-29A
123-16B	(3/3)	ADV C SW PLS	30	NC	(2/3)	
103-49A, 123-15B	(3/3)	DM TBC SS JP1	31	C SH	(3/3)	104-16A
101-32B	(3/3)	C SDO	32	C W CLAMP PLS	(1/3)	103-20A
101-33B	(3/3)	C SHW	33	C PDS CONT	(1/3)	101-33A
101-34B	(3/3)	C PB SYNC	34	L;C GUARD BAND	(3/3)	101-34A
101-35B	(1/3)	C WCLP	35	C ADV WZ	(3/3)	101-35A
101-36B	(3/3)	C GATED WCK	36	C WZ	(3/3)	101-36A, 123-9B
101-37B	(1/3)	C DATA 1	37	C DATA 0	(1/3)	101-37A
101-38B	(1/3)	C DATA 3	38	C DATA 2	(1/3)	101-38A
101-39B	(1/3)	C DATA 5	39	C DATA 4	(1/3)	101-39A
101-40B	(1/3)	C DATA 7	40	C DATA 6	(1/3)	101-40A
101-41B	(1/3)	C DATA 9	41	C DATA 8	(1/3)	101-41A
104-14A, 123-10A	(2/3)	Y PB SYNC	42	C GBD	(3/3)	104-15A
115-48A	(3/3)	TBC VPR JP5	43	L;Y DO PLS	(1/3)	103-16A
115-48B	(2/3)	TBC VD 2	44	L;Y SDO PLS	(1/3)	101-17A
115-49A	(3/3)	TBC VPR JP7	45	L;C DO PLS	(1/3)	103-16B
113-20A	(3/3)	TBC VPR JP1	46	L;C SDO PLS	(1/3)	101-28A
113-21A	(3/3)	TBC VPR JP2	47	CNF AC FREQ	(2/3)	123-36A
124-41A	(1/3)	L;Y PCM MUTE	48	NC	(2/3)	
124-41B	(1/3)	L;C PCM MUTE	49	H;SV LOCK	(2/3)	123-43A
103-50A	(1/3)	H;OSC ON	50	L;METAL/H;OXIDE	(3/3)	103-15A
103-50B	(1/3)	DM TBC JP1	51	H;NTSC/L;PAL	(3/3)	104-25B
	(2/3)	NC	52	NC	(2/3)	
	(2/3)	NC	53	NC	(2/3)	
104-9A	(1/3)	AP TBC JP0	54	NC	(2/3)	
104-9B	(1/3)	AP TBC JP1	55	NC	(2/3)	
	(2/3)	NC	56	NC	(2/3)	
15V	(1/3)	REG +15V	57	REG +15V	(1/3)	15V
-15V	(1/3)	REG -15V	58	REG -15V	(1/3)	-15V
	(1/3)	GND	59	GND	(1/3)	
	(1/3)	GND	60	GND	(1/3)	

FOR DM-89 BOARD

	DM BOARD SHEET No.	CN103 A		CN103 B	DM BOARD SHEET No.	
	(4/4)	GND	1	GND	(4/4)	
	(4/4)	GND	2	GND	(4/4)	
8V	(4/4)	REG +8V	3	REG +8V	(4/4)	8V
-8V	(4/4)	REG -8V	4	REG -8V	(4/4)	-8V
5V	(4/4)	REG +5V	5	REG +5V	(4/4)	5V
3.3V	(4/4)	REG +3.3V	6	REG +3.3V	(4/4)	3.3V
	(4/4)	NC	7	NC	(4/4)	
	(4/4)	NC	8	NC	(4/4)	
	(4/4)	NC	9	NC	(4/4)	
104-10A	(4/4)	ADV C SW PLS	10	L;NOISELESS PB AP DM JP1	(4/4)	123-12B (LOT NO. 403-) 104-10B (LOT NO. 302-402)
	(4/4)	NC	11	NC	(4/4)	
	(4/4)	NC	12	NC	(4/4)	
	(4/4)	NC	13	NC	(4/4)	
NC	(2/4)	L;Y DO	14	L;C DO	(2/4)	NC
102-50B	(4/4)	L;METAL/H;OXIDE	15	NC	(4/4)	
102-43B, 104-22A, 123-17A	(1/4)	L;Y DO PLS	16	L;C DO PLS	(2/4)	102-45B, 123-17B
101-19B	(4/4)	H;Y PEDESTAL INS	17	H;C PEDESTAL INS	(4/4)	101-30B
101-18B	(4/4)	H;Y REF INS	18	H;C REF INS	(4/4)	101-31B
102-19B	(3/4)	Y W CLAMP PLS	19	L;PB NO SIG	(3/4)	102-18B
102-32B	(3/4)	C W CLAMP PLS	20	TBC SPEED	(3/4)	102-20B
	(4/4)	NC	21	NC	(4/4)	
104-23A	(4/4)	H;AFM MUTE	22	H;LAU MUTE	(4/4)	104-24A, 105-56A
104-25A	(4/4)	H;NR ON	23	NC	(4/4)	
	(4/4)	NC	24	NC	(4/4)	
	(4/4)	GND	25	GND	(4/4)	
102-25B	(3/4)	Y DEMOD(X)	26	GND	(4/4)	
102-26B	(3/4)	Y DEMOD(G)	27	GND	(4/4)	
102-28B	(3/4)	C DEMOD(X)	28	GND	(4/4)	
102-29B	(3/4)	C DEMOD(G)	29	GND	(4/4)	
	(4/4)	NC	30	NC	(4/4)	
123-21A, 117-11A	(1/4)	Y RF ENVELOPE(X)	31	NC	(4/4)	
123-21B, 117-11B	(1/4)	Y RF ENVELOPE(G)	32	NC	(4/4)	
117-12A	(2/4)	C RF ENVELOPE(X)	33	NC	(4/4)	
117-12B	(2/4)	C RF ENVELOPE(G)	34	NC	(4/4)	
	(4/4)	NC	35	NC	(4/4)	
123-20B	(1/4)	DM SS JP2	36	NC	(4/4)	
123-20A	(1/4)	DM SS JP3	37	NC	(4/4)	
	(1/4)	GND	38	DM PB Y(X)	(1/4)	160-1
	(1/4)	GND	39	DM PB Y(G)	(1/4)	160-2
	(2/4)	GND	40	DM PB C(X)	(2/4)	160-3
	(2/4)	GND	41	DM PB C(G)	(2/4)	160-4
104-29A	(2/4)	C RF(X)	42	DM SS JP0	(4/4)	124-43A
104-29B	(2/4)	C RF(G)	43	DM SS JP1	(4/4)	124-43B
123-19A	(1/4)	L;RF Y VBLK	44	H;FAST SEARCH	(4/4)	123-18A
123-19B	(2/4)	L;RF C VBLK	45	L;SLOW BID	(4/4)	123-18B
	(4/4)	NC	46	L;Y PCM MUTE	(3/4)	124-41A
123-36A	(3/4)	CNF AC FREQ	47	L;C PCM MUTE	(3/4)	124-41B
102-17B, 123-15A	(3/4)	DM TBC SS JP0	48	ADV Y SW PLS	(3/4)	123-16A
102-31A, 123-15B	(3/4)	DM TBC SS JP1	49	ADV C SW PLS	(3/4)	123-16B
102-50A	(2/4)	H;OSC ON	50	DM TBC JP1	(2/4)	102-51A
122-13B	(4/4)	SYIF2 SCK	51	SYIF2 CMD	(4/4)	122-13A
122-12B	(4/4)	SYIF2 RES	52	SYIF2 RDY	(4/4)	122-12A
122-15B	(4/4)	L;DM CS	53	L;SYS RESET	(4/4)	122-35A
104-18A	(4/4)	L;REF CK ERROR	54	L;PLL ERROR	(4/4)	104-19A
104-20A	(4/4)	L;W/R TIM ERROR	55	L;SQL ON	(4/4)	104-21A
	(4/4)	NC	56	NC	(4/4)	
15V	(4/4)	REG +15V	57	REG +15V	(4/4)	15V
-15V	(4/4)	REG -15V	58	REG -15V	(4/4)	-15V
	(4/4)	GND	59	GND	(4/4)	
	(4/4)	GND	60	GND	(4/4)	

FOR AP-28 BOARD

	DM BOARD SHEET No.	CN104 A		CN104 B	DM BOARD SHEET No.	
	(1/3)	GND	1	GND	(1/3)	
	(1/3)	GND	2	GND	(1/3)	
8V	(1/3)	REG +8V	3	REG +8V	(1/3)	8V
-8V	(1/3)	REG -8V	4	REG -8V	(1/3)	-8V
5V	(1/3)	REG +5V	5	REG +5V	(1/3)	5V
3.3V	(1/3)	REG +3.3V	6	REG +3.3V	(1/3)	3.3V
	(3/3)	NC	7	NC	(3/3)	
	(3/3)	NC	8	NC	(3/3)	
102-54A	(2/3)	AP TBC JP0	9	AP TBC JP1	(2/3)	102-55A
103-10A	(2/3)	ADV C SW PLS	10	AP DM JP1	(2/3)	NC (LOT NO. 302-402 ONLY: 103-10B)
	(3/3)	NC	11	NC	(3/3)	
114-3B	(2/3)	REF CK 27(X)	12	NC	(3/3)	
114-3A	(2/3)	REF CK 27(G)	13	NC	(3/3)	
102-42A	(2/3)	Y PB SYNC	14	NC	(3/3)	
102-42B	(2/3)	C GBD	15	NC	(3/3)	
102-31B	(2/3)	C SH	16	NC	(3/3)	
	(3/3)	NC	17	DT V	(2/3)	123-11A
103-54A	(2/3)	L;REF CK ERROR	18	ANA Ō/E	(2/3)	115-47B
103-54B	(2/3)	L;PLL ERROR	19	NC	(3/3)	
103-55A	(2/3)	L;W/R TIM ERROR	20	NC	(3/3)	
103-55B	(3/3)	L;SQL ON	21	H;SV LOCK	(3/3)	123-43A
103-16A	(2/3)	L;Y DO PLS	22	L;NOISELESS PB	(2/3)	123-12B
103-22A	(2/3)	H;AFM MUTE	23	H;DIGITAL/L;ANALOG	(2/3)	120-48B
103-22B	(1/3)	H;LAU MUTE	24	H;METAL/L;OXIDE	(2/3)	120-49B
103-23A	(1/3)	H;NR ON	25	H;NTSC/L;PAL	(2/3)	102-51B
	(2/3)	GND	26	GND	(2/3)	
	(2/3)	GND	27	GND	(2/3)	
	(2/3)	GND	28	GND	(2/3)	
103-42A	(2/3)	C RF(X)	29	C RF(G)	(2/3)	103-43A
	(2/3)	GND	30	GND	(2/3)	
	(3/3)	NC	31	NC	(3/3)	
	(3/3)	NC	32	NC	(3/3)	
	(3/3)	NC	33	NC	(3/3)	
	(3/3)	NC	34	NC	(3/3)	
	(3/3)	NC	35	NC	(3/3)	
	(3/3)	NC	36	NC	(3/3)	
	(3/3)	NC	37	NC	(3/3)	
	(1/3)	GND	38	GND	(1/3)	
105-39A	(1/3)	PB CH-2 SIG(X)	39	PB CH-2 SIG(G)	(1/3)	105-39B
	(1/3)	GND	40	GND	(1/3)	
105-41A	(1/3)	PB CH-1 SIG(X)	41	PB CH-1 SIG(G)	(1/3)	105-41B
	(1/3)	GND	42	GND	(1/3)	
	(3/3)	NC	43	NC	(3/3)	
	(3/3)	NC	44	NC	(3/3)	
	(3/3)	NC	45	NC	(3/3)	
	(1/3)	GND	46	GND	(1/3)	
119-17A/17B	(1/3)	B PB CH-1(X)	47	B PB CH-1(G)	(1/3)	119-18A/18B
	(1/3)	GND	48	GND	(1/3)	
119-19A/19B	(1/3)	B PB CH-2(X)	49	B PB CH-2(G)	(1/3)	119-20A/20B
	(3/3)	GND	50	GND	(3/3)	
119-21A/21B	(3/3)	B PB CH-3(X)	51	B PB CH-3(G)	(3/3)	119-22A/22B
	(3/3)	GND	52	GND	(3/3)	
119-23A/23B	(3/3)	B PB CH-4(X)	53	B PB CH-4(G)	(3/3)	119-24A/24B
	(3/3)	GND	54	GND	(3/3)	
	(3/3)	NC	55	NC	(3/3)	
	(3/3)	NC	56	NC	(3/3)	
15V	(1/3)	REG +15V	57	REG +15V	(1/3)	15V
-15V	(1/3)	REG -15V	58	REG -15V	(1/3)	-15V
	(1/3)	GND	59	GND	(1/3)	
	(1/3)	GND	60	GND	(1/3)	

CN161 / CN160

	CN161			CN160		
106-8B	EQ PB Y(X)	1	9 — 9	1	DM PB Y(X)	103-38B
106-9B	EQ PB Y(G)	2	8 — 8	2	DM PB Y(G)	103-39B
106-10B	EQ PB C(X)	3	9 — 9	3	DM PB C(X)	103-40B
106-11B	EQ PB C(G)	4	8 — 8	4	DM PB C(G)	103-41B

CN101, 102, 103, 104, 160, 161

MB-441A MCB: MOUNTED AS DESIGN
MB-441 MCB : NO MOUNTED

LOT NO.	BOARD NO.
302-306	1-648-560-11
307-402	1-648-560-12
403-	1-648-560-13

Mother board
MB-441 BOARD (1/6)

BOARD NO. 1-648-560-11, 12, 13
BOARD' S LOT NO. 302-
DVW-A500(J, UC) :MB-441A MCB
DVW-A500P(EK) :MB-441A MCB
DVW-A500P(UC) :MB-441A MCB
DVW-500 (J, UC) :MB-441 MCB
DVW-500P (EK) :MB-441 MCB
DVW-500P (UC) :MB-441 MCB

DVW-MB441-ALL-REC-S/M-05

CN100
CN101
CN102
CN103
CN104
CN138
CN139
CN160
CN161

1 2 3 4 5

I J K L M N O P

 MB-441 (2/6)

MB-441 BOARD SHEET No.	MB-441 BOARD REF. No.	CONNECTION	
(1/6)	CN100	DEC-65	BKDW-505/506
	CN101	TBC-23	DVW-A500/A500P ONLY (MB-441A MCB)
	CN102	TBC-24	
	CN103	DM-89	
	CN104	AP-28	
(2/6)	CN105	CUE-1AP/1A/1	
	CN106	EQ-45A/45	
	CN110, CN112	DIF-16	
(3/6)	CN113, CN114, CN115	VPR-1	
(4/6)	CN116, CN117, CN118	DPR-36	
(5/6)	CN119, CN120, CN121	APR-1	
(6/6)	CN122, CN123, CN124	SS-52A/52	
	CN130	RS232C CONNECTOR	
(5/6)	CN131	VIDEO CONTROL CONNECTOR	
(6/6)	CN132	REMOTE 1 IN(9P) CONNECTOR	
	CN133	REMOTE 1 OUT(9P) CONNECTOR	
	CN134	CONTROL PANEL CONNECTOR	
(3/6)	CN135	CP-218	(CN412)
	CN136		(CN413)
(5/6)	CN137	CP-220	(CN404)
(1/6)	CN138	CP-218	(CN414)
	CN139		(CN415)
(2/6)	CN140	CP-220	(CN402)
(5/6)	CN142		(CN400)
	CN143		(CN401)
	CN144		(CN403)
	CN145	VR-152	(CN512)
	CN147	FP-58	(CN500)
(6/6)	CN148	SWC-19	(CN148)
	CN149	HN-181	(CN201)
	CN150	FAN MOTOR(R)	
	CN151	SWITCHING REGULATOR	(CN201)
	CN152		(CN202)
	CN153		(CN206)
	CN154	HN-181	(CN205)
	CN155	NO CONNECTION	
	CN156	SWITCHING REGULATOR	(CN203)
(1/6)	CN160	CN161 OF MB-441	
	CN161	CN160 OF MB-441	

FOR CUE-1AP/1A/1 BOARD

	CUE BOARD SHEET No.	CN105 A		CN105 B	CUE BOARD SHEET No.	
	(3/4)	GND	1	GND	(3/4)	
	(3/4)	GND	2	GND	(3/4)	
8V	(3/4)	REG +8V	3	REG +8V	(3/4)	8V
-8V	(3/4)	REG -8V	4	REG -8V	(3/4)	-8V
5V	(1/4)	REG +5V	5	REG +5V	(1/4)	5V
3.3V	(3/4)	REG +3.3V	6	REG +3.3V	(3/4)	3.3V
	(3/4)	NC	7	NC	(3/4)	
	(3/4)	NC	8	NC	(3/4)	
	(3/4)	NC	9	NC	(3/4)	
123-6A	(3/4)	REC LTC	10	PB LTC	(3/4)	123-5A
123-5B	(1/4)	LTC SOURCE	11	NC	(3/4)	
137-6	(1/4)	EXT LTC IN(X)	12	EXT LTC IN(Y)	(1/4)	137-7
137-8	(1/4)	EXT LTC IN(G)	13	EXT LTC IN(G)	(1/4)	137-8
	(3/4)	NC	14	NC	(3/4)	
137-9	(1/4)	EXT LTC OUT(X)	15	EXT LTC OUT(Y)	(1/4)	137-10
137-11	(1/4)	EXT LTC OUT(G)	16	EXT LTC OUT(G)	(1/4)	137-11
123-6B	(1/4)	LTC OUT	17	NC	(3/4)	
	(3/4)	NC	18	NC	(3/4)	
120-26A	(2/4)	CUE JP0	19	CUE JP1	(2/4)	120-26B
	(3/4)	NC	20	NC	(3/4)	
	(3/4)	NC	21	NC	(3/4)	
	(3/4)	NC	22	NC	(3/4)	
147-13	(2/4)	CUE PB GAIN	23	CUE REC GAIN	(2/4)	147-14
147-12	(2/4)	CUE GAIN GND	24	CUE GAIN GND	(2/4)	147-12
	(3/4)	NC	25	NC	(3/4)	
140-1	(1/4)	CUE IN(X)	26	CUE IN(Y)	(1/4)	140-2
140-3	(1/4)	CUE IN(G)	27	CUE IN(G)	(1/4)	140-3
	(1/4)	NC	28	NC	(1/4)	
	(1/4)	NC	29	NC	(1/4)	
140-4	(1/4)	CUE OUT(X)	30	CUE OUT(Y)	(1/4)	140-5
140-6	(1/4)	CUE OUT(G)	31	CUE OUT(G)	(1/4)	140-6
	(1/4)	NC	32	NC	(1/4)	
120-36A	(2/4)	CUE PEAK SIGNAL	33	NC	(1/4)	
	(1/4)	NC	34	NC	(1/4)	
119-40A/40B	(2/4)	CUE MONITOR(X)	35	CUE MONITOR(G)	(2/4)	119-41A/41B
	(1/4)	NC	36	NC	(1/4)	
120-38B	(2/4)	CUE TEST SIG(X)	37	NC	(1/4)	
	(1/4)	NC	38	NC	(1/4)	
104-39A	(2/4)	PB CH-2 SIG(X)	39	PB CH-2 SIG(G)	(2/4)	104-39B
	(1/4)	NC	40	NC	(1/4)	
104-41A	(2/4)	PB CH-1 SIG(X)	41	PB CH-1 SIG(G)	(2/4)	104-41B
	(1/4)	NC	42	NC	(1/4)	
120-50A	(4/4)	L;POWER ON MUTE	43	CUE TEST	(3/4)	120-37A
120-38A	(4/4)	LTC ERASE DET	44	CUE MIC ON/OFF	(1/4)	137-5
120-39A	(4/4)	FULL ERASE DET	45	CUE ERASE DET	(4/4)	120-39B
120-40A	(2/4)	CUE EE DET	46	CUE BIAS DET	(4/4)	120-40B
120-41A	(1/4)	L;LTC EQ ON	47	CUE OUT DET	(2/4)	120-41B
120-42A	(4/4)	H;CUE ERASE ON	48	H;LTC ERASE ON	(4/4)	120-42B
120-43A	(4/4)	OSC H;OFF/L;ON	49	H;FULL ERASE ON	(4/4)	120-43B
120-44A	(3/4)	LTC H;PB/L;REC	50	H;CUE BIAS ON	(4/4)	120-44B
120-45A	(3/4)	H;LTC HPF ON	51	L;LTC EQ NORM	(3/4)	120-45B
120-46A	(3/4)	H;CUE REC MUTE	52	H;LTC LPF ON	(3/4)	120-46B
120-47A	(2/4)	H;CUE PB MUTE	53	CUE H;PB/L;EE	(3/4)	120-47B
120-48A	(3/4)	CUE H;PB/L;REC	54	H;DIGITAL/L;ANALOG	(3/4)	120-48B
120-49A	(2/4)	H;SLOW EQ ON	55	H;METAL/L;OXIDE	(3/4)	120-49B
103-22B	(2/4)	H;LAU MUTE	56	H;AUDIO ATT ON	(2/4)	120-50B
15V	(1/4)	REG +15V	57	REG +15V	(1/4)	15V
-15V	(1/4)	REG -15V	58	REG -15V	(1/4)	-15V
	(1/4)	GND	59	GND	(1/4)	
	(1/4)	GND	60	GND	(1/4)	

FOR EQ-45A/45 BOARD

	EQ BOARD SHEET No.	CN106 A		CN106 B	EQ BOARD SHEET No.	
	(1/6)	GND	1	GND	(1/6)	
	(1/6)	GND	2	GND	(1/6)	
8V	(1/6)	REG +8V	3	REG +8V	(1/6)	8V
-8V	(1/6)	REG -8V	4	REG -8V	(1/6)	-8V
5V	(1/6)	REG +5V	5	REG +5V	(1/6)	5V
3.3V	(1/6)	REG +3.3V	6	REG +3.3V	(1/6)	3 3V
122-37B	(1/6)	L;SYSTEM EE1	7	(A)GND	(1/6)	106-8A/10A
106-10A/7B	(1/6)	(A)GND	8	EQ PB Y(X)	(3/6)	161-1
122-38B	(1/6)	L;SYSTEM EE2	9	EQ PB Y(G)	(3/6)	161-2
106-8A/7B	(1/6)	(A)GND	10	EQ PB C(X)	(3/6)	161-3
122-34B	(1/6)	L;SYS RESET 3.3V	11	EQ PB C(G)	(3/6)	161-4
123-35B	(1/6)	L;FE B EN	12	L;FE A EN	(1/6)	123-35A
123-47B	(1/6)	REC BD SEL	13	REC AC SEL	(1/6)	123-47A
123-30A	(1/6)	EQ SS JP1	14	REC SAT AC	(1/6)	123-32A
123-34B	(1/6)	EQ SS JP2	15	L;SAT AC EN	(1/6)	123-34A
122-40B	(1/6)	H;REV/L;FWD	16	L;FAST SEARCH	(1/6)	123-33B
122-18A	(2/6)	EQ STB1	17	SYIF1 SCK	(2/6)	122-17B
122-18B	(3/6)	EQ STB2	18	SYIF1 CMD	(2/6)	122-17A
122-19A	(4/6)	EQ STB3	19	L;B-CAM SEL	(1/6)	122-36B
123-49A	(1/6)	ADV AC SEL	20	H;REC LOCK OUT	(1/6)	122-39B
123-49B	(1/6)	ADV BD SEL	21	PB SAT REC AC	(2/6)	123-25B, 117-19A
123-48A	(1/6)	CNF AC SEL	22	SVCNT ERR	(1/6)	122-36A
123-48B	(1/6)	CNF BD SEL	23	PB SAT REC BD	(2/6)	123-27B, 117-20A
123-37A	(5/6)	ADV AC FREQ	24	PRTY CLR	(1/6)	122-38A
123-37B	(5/6)	ADV BD FREQ	25	PB SAT ADV AC	(3/6)	123-29B
123-36A	(6/6)	CNF AC FREQ	26	PRTY ERR	(1/6)	122-37A
123-36B	(6/6)	CNF BD FREQ	27	PB SAT ADV BD	(3/6)	123-31B
116-37B	(1/6)	EQ DPR JP0	28	ADV AC ENV	(3/6)	123-22A, 117-17A
116-38B	(1/6)	EQ DPR JP1	29	ADV BD ENV	(3/6)	123-22B, 117-17B
	(1/6)	NC	30	CNF AC ENV	(4/6)	117-16A
	(1/6)	NC	31	CNF BD ENV	(4/6)	117-16B
122-3B, 117-7B	(5/6)	METRIC ADV BD	32	METRIC ADV AC	(5/6)	122-4B, 117-7A
122-5B, 117-8B	(6/6)	METRIC CNF BD	33	METRIC CNF AC	(6/6)	122-6B, 117-8A
123-23A	(1/6)	SAT CK(G)	34	SAT CK(X)	(1/6)	123-23B
116-15A	(1/6)	REC CK(G)	35	REC CK(X)	(1/6)	116-15B
116-16A	(1/6)	L;PRCD OFF	36	REC PRTY	(1/6)	116-16B
116-17B	(1/6)	REC AC D1	37	REC AC D0	(1/6)	116-17A
116-18B	(1/6)	REC AC D3	38	REC AC D2	(1/6)	116-18A
116-19B	(1/6)	REC BD D1	39	REC BD D0	(1/6)	116-19A
116-20B	(1/6)	REC BD D3	40	REC BD D2	(1/6)	116-20A
116-21A	(1/6)	L;REC C EN	41	L;REC A EN	(1/6)	116-21B
116-22A	(1/6)	L;REC D EN	42	L;REC B EN	(1/6)	116-22B
116-23B	(1/6)	ADV AC D1	43	ADV AC D0	(1/6)	116-23A
116-24B	(1/6)	ADV AC D3	44	ADV AC D2	(1/6)	116-24A
116-25A	(1/6)	ADV AC CK(G)	45	ADV AC CK(X)	(1/6)	116-25B
116-26A	(1/6)	ADV BD PRTY	46	ADV AC PRTY	(1/6)	116-26B
116-27B	(1/6)	ADV BD D1	47	ADV BD D0	(1/6)	116-27A
116-28B	(1/6)	ADV BD D3	48	ADV BD D2	(1/6)	116-28A
116-29A	(1/6)	ADV BD CK(G)	49	ADV BD CK(X)	(1/6)	116-29B
116-30B	(1/6)	CNF AC D1	50	CNF AC D0	(1/6)	116-30A
116-31B	(1/6)	CNF AC D3	51	CNF AC D2	(1/6)	116-31A
116-32A	(1/6)	CNF AC CK(G)	52	CNF AC CK(X)	(1/6)	116-32B
116-33A	(1/6)	CNF BD PRTY	53	CNF AC PRTY	(1/6)	116-33B
116-34B	(1/6)	CNF BD D1	54	CNF BD D0	(1/6)	116-34A
116-35B	(1/6)	CNF BD D3	55	CNF BD D2	(1/6)	116-35A
116-36A	(1/6)	CNF BD CK(G)	56	CNF BD CK(X)	(1/6)	116-36B
15V	(1/6)	REG +15V	57	REG +15V	(1/6)	15V
-15V	(1/6)	REG -15V	58	REG -15V	(1/6)	-15V
	(1/6)	GND	59	GND	(1/6)	
	(1/6)	GND	60	GND	(1/6)	

CN140

	CN140			
105-26A	CUE IN(X)	1	9	CP-220, 402-1
105-26B	CUE IN(Y)	2	2	CP-220, 402-2
105-27A/27B	CUE IN(G)	3	8	
105-30A	CUE OUT(X)	4	9	CP-220, 402-4
105-30B	CUE OUT(Y)	5	2	CP-220, 402-5
105-31A/31B	CUE OUT(G)	6	8	

 MB-441 (2/6)

1

2

3

4

5

FOR DIF-16 BOARD

	DIF BOARD SHEET No.	CN110 A		CN110 B	DIF BOARD SHEET No.	
100-26A	(4/5)	D2 DATA 0	1	D2 DATA 1	(4/5)	100-26B
100-27A	(4/5)	D2 DATA 2	2	D2 DATA 3	(4/5)	100-27B
100-28A	(4/5)	D2 DATA 4	3	D2 DATA 5	(4/5)	100-28B
100-29A	(4/5)	D2 DATA 6	4	D2 DATA 7	(4/5)	100-29B
100-30A	(4/5)	D2 DATA 8	5	D2 DATA 9	(4/5)	100-30B
	(3/5)	NC	6	NC	(3/5)	
100-31A	(4/5)	D2 CF0	7	D2 CF1	(4/5)	100-31B
100-32A	(4/5)	D2 CF2	8	D2 PARITY	(4/5)	100-32B
100-33A/33B, 110-9B	(4/5)	D2 GND	9	D2 GND	(4/5)	100-33A/33B, 110-9A
100-34B	(4/5)	D2 CK(X)	10	D2 CK(G)	(4/5)	100-34A
100-24A	(4/5)	DIF DEC JP0	11	DIF DEC JP1	(4/5)	100-24B
100-25A	(4/5)	DIF DEC JP2	12	DIF SS 4FSC(X)	(1/5)	122-34A
	(3/5)	NC	13	DIF SS 4FSC(G)	(1/5)	122-33B
113-24A	(4/5)	D1 DATA 0	14	D1 DATA 1	(4/5)	113-24B
113-25A	(4/5)	D1 DATA 2	15	D1 DATA 3	(4/5)	113-25B
113-26A	(4/5)	D1 DATA 4	16	D1 DATA 5	(4/5)	113-26B
113-27A	(4/5)	D1 DATA 6	17	D1 DATA 7	(4/5)	113-27B
113-28A	(4/5)	D1 DATA 8	18	D1 DATA 9	(4/5)	113-28B
113-29A	(4/5)	D1 HD	19	D1 VD	(4/5)	113-29B
113-30A	(4/5)	D1 CF0	20	D1 CF1	(4/5)	113-30B
113-31A	(4/5)	D1 CF2	21	D1 PARITY	(4/5)	113-31B
114-24A	(4/5)	CRCC	22	CSIT/COMP	(4/5)	114-25B
113-32B	(4/5)	D1 CK(X)	23	D1 CK(G)	(4/5)	113-32A
110-24B, 113-42A/42B	(4/5)	DIF GND 2	24	DIF GND 2	(4/5)	110-24A, 113-42A/42B
113-34A	(1/5)	D1/D2 DATA 0	25	D1/D2 DATA 1	(1/5)	113-34B
113-35A	(1/5)	D1/D2 DATA 2	26	D1/D2 DATA 3	(1/5)	113-35B
113-36A	(1/5)	D1/D2 DATA 4	27	D1/D2 DATA 5	(1/5)	113-36B
113-37A	(1/5)	D1/D2 DATA 6	28	D1/D2 DATA 7	(1/5)	113-37B
113-38A	(1/5)	D1/D2 DATA 8	29	D1/D2 DATA 9	(1/5)	113-38B
113-39A	(1/5)	D1/D2 HD	30	NC	(3/5)	
113-39B	(1/5)	D1/D2 CF0	31	D1 CF INFO/D2 CF1	(1/5)	113-40A
113-40B	(1/5)	D1/D2 CF2	32	D1/D2 PARITY	(1/5)	113-41B
113-41A	(1/5)	D1 DLY P/D2 SYNC	33	NC	(3/5)	
110-34B, 113-33A/33B	(1/5)	DIF GND 1	34	DIF GND 1	(1/5)	110-34A, 113-33A/33B
113-43B	(1/5)	DIF 4FSC(X)	35	DIF 4FSC(G)	(1/5)	113-43A
NC	(1/5)	ENC1 VCO OUT	36	DEC CK CONT	(4/5)	NC
114-2B	(1/5)	DIF CK 27(X)	37	DIF CK 27(G)	(1/5)	114-2A
NC	(2/5)	ENC2 VCO OUT	38	NC	(3/5)	
114-23A	(4/5)	DIF SIG FLAG	39	DIF VPR JP2	(3/5)	114-24B
117-5A	(3/5)	DPR DIF JP0	40	DPR DIF JP1	(3/5)	117-5B
117-6A	(3/5)	DPR DIF JP2	41	NC	(3/5)	
114-25A	(3/5)	DIF EVR DATA	42	DIF EVR CK	(3/5)	114-26B
114-26A	(3/5)	L;DIF EVR RESET	43	NC	(3/5)	
15V-2	(3/5)	REG +15V-2	44	REG +15V-2	(3/5)	15V-2
	(3/5)	REG +15V-2	45	REG +15V-2	(3/5)	
-15V-2	(3/5)	REG -15V-2	46	REG -15V-2	(3/5)	-15V-2
	(3/5)	REG -15V-2	47	REG -15V-2	(3/5)	
	(3/5)	GND-2	48	GND-2	(3/5)	
	(3/5)	GND-2	49	GND-2	(3/5)	
	(3/5)	GND-2	50	GND-2	(3/5)	

FOR DIF-16 BOARD

	DIF BOARD SHEET No.	CN112 A		CN112 B	DIF BOARD SHEET No.	
	(3/5)	GND-2	1	GND-2	(3/5)	
	(3/5)	GND-2	2	GND-2	(3/5)	
	(3/5)	GND-2	3	GND-2	(3/5)	
8V-2	(3/5)	REG +8V-2	4	REG +8V-2	(3/5)	8V-2
	(3/5)	REG +8V-2	5	REG +8V-2	(3/5)	
-8V-2	(3/5)	REG -8V-2	6	REG -8V-2	(3/5)	-8V-2
	(3/5)	REG -8V-2	7	REG -8V-2	(3/5)	
5V-2	(3/5)	REG +5V-2	8	REG +5V-2	(3/5)	5V-2
	(3/5)	REG +5V-2	9	REG +5V-2	(3/5)	
3.3V-2	(3/5)	REG +3.3V-2	10	REG +3.3V-2	(3/5)	3.3V-2
	(3/5)	REG +3.3V-2	11	REG +3.3V-2	(3/5)	
	(3/5)	REG +3.3V-2	12	REG +3.3V-2	(3/5)	
	(3/5)	REG +3.3V-2	13	REG +3.3V-2	(3/5)	
114-20B	(3/5)	DD SCK	14	DD START	(3/5)	114-20A
114-19A	(3/5)	MODE DATA	15	STATUS DATA	(3/5)	114-19B
114-21A	(3/5)	DIF LOAD	16	DIF DO	(3/5)	114-22A
122-41A	(2/5)	L;DIF CHA CS	17	DIF CHA CK	(2/5)	122-41B
122-42A	(2/5)	DIF CHA DT	18	S CHARA SIG(X)	(2/5)	122-42B
122-43A	(2/5)	S CHARA FRAME	19	S CHARA SIG(G)	(2/5)	122-43B
	(3/5)	NC	20	CHARA FRAME	(3/5)	123-2A
122-33A	(4/5)	DIF SS CSIT/COMP	21	NC	(3/5)	
	(3/5)	NC	22	NC	(3/5)	
	(3/5)	NC	23	NC	(3/5)	
	(3/5)	NC	24	NC	(3/5)	
115-28A	(1/5)	DIF AU 128FSO(G)	25	DIF AU 128FSO(X)	(1/5)	115-28B
	(3/5)	GND-2	26	GND-2	(3/5)	
	(3/5)	NC	27	DIF AU 64FSO	(1/5)	115-30A
	(3/5)	GND-2	28	GND-2	(3/5)	
	(3/5)	NC	29	DIF AU FSO	(1/5)	115-31A
	(3/5)	NC	30	NC	(3/5)	
	(3/5)	NC	31	NC	(3/5)	
	(3/5)	NC	32	NC	(3/5)	
	(3/5)	NC	33	NC	(3/5)	
117-46A	(1/5)	SIF T 5/6	34	SIF T 7/8	(1/5)	117-46B
117-47A	(5/5)	SIF R 5/6	35	SIF R 7/8	(5/5)	117-47B
117-48A	(5/5)	SIF MUTE 5	36	SIF MUTE 6	(5/5)	117-48B
117-49A	(5/5)	SIF MUTE 7	37	SIF MUTE 8	(5/5)	117-49B
	(3/5)	NC	38	NC	(3/5)	
118-46A	(1/5)	SIF T 1/2	39	SIF T 3/4	(1/5)	118-46B
118-47A	(5/5)	SIF R 1/2	40	SIF R 3/4	(5/5)	118-47B
118-48A	(5/5)	SIF MUTE 1	41	SIF MUTE 2	(5/5)	118-48B
118-49A	(5/5)	SIF MUTE 3	42	SIF MUTE 4	(5/5)	118-49B
	(3/5)	NC	43	NC	(3/5)	
121-45B	(3/5)	SIF DATA 0	44	SIF DATA 1	(3/5)	121-46A
121-46B	(3/5)	SIF DATA 2	45	SIF DATA 3	(3/5)	121-47A
121-47B	(3/5)	SIF DATA 4	46	SIF DATA 5	(3/5)	121-48A
121-48B	(3/5)	SIF DATA 6	47	SIF DATA 7	(3/5)	121-49A
	(3/5)	NC	48	NC	(3/5)	
121-49B	(3/5)	SIF ALE	49	SIF WR	(3/5)	121-50A
	(3/5)	NC	50	SIF RD	(3/5)	121-50B

LOT NO.	BOARD NO.
302-306	1-648-560-11
307-402	1-648-560-12
403-	1-648-560-13

Mother board

MB-441 BOARD (2/6)

BOARD NO. 1-648-560-11, 12, 13
BOARD' S LOT NO. 302-
DVW-A500(J, UC) :MB-441A MCB
DVW-A500P(EK) :MB-441A MCB
DVW-A500P(UC) :MB-441A MCB
DVW-500 (J, UC) :MB-441 MCB
DVW-500P (EK) :MB-441 MCB
DVW-500P (UC) :MB-441 MCB

DVW-MB441-ALL-REC-S/M-04

CN105
CN106
CN110
CN112
CN140

 MB-441 (3/6)

MB-441 BOARD SHEET No.	REF. No.	CONNECTION	
(1/6)	CN100	DEC-65	BKDW-505/506
	CN101	TBC-23	DVW-A500/A500P ONLY (MB-441A MCB)
	CN102	TBC-24	
	CN103	DM-89	
	CN104	AP-28	
(2/6)	CN105	CUE-1AP/1A/1	
	CN106	EQ-45A/45	
	CN110, CN112	DIF-16	
(3/6)	CN113, CN114, CN115	VPR-1	
(4/6)	CN116, CN117, CN118	DPR-36	
(5/6)	CN119, CN120, CN121	APR-1	
(6/6)	CN122, CN123, CN124	SS-52A/52	
	CN130	RS232C CONNECTOR	
(5/6)	CN131	VIDEO CONTROL CONNECTOR	
(6/6)	CN132	REMOTE 1 IN(9P) CONNECTOR	
	CN133	REMOTE 1 OUT(9P) CONNECTOR	
	CN134	CONTROL PANEL CONNECTOR	
(3/6)	CN135	CP-218	(CN412)
	CN136		(CN413)
(5/6)	CN137	CP-220	(CN404)
(1/6)	CN138	CP-218	(CN414)
	CN139		(CN415)
(2/6)	CN140	CP-220	(CN402)
(5/6)	CN142		(CN400)
	CN143		(CN401)
	CN144		(CN403)
	CN145	VR-152	(CN512)
	CN147	FP-58	(CN500)
(6/6)	CN148	SWC-19	(CN148)
	CN149	HN-181	(CN201)
	CN150	FAN MOTOR(R)	
	CN151	SWITCHING REGULATOR	(CN201)
	CN152		(CN202)
	CN153		(CN206)
	CN154	HN-181	(CN205)
	CN155	NO CONNECTION	
	CN156	SWITCHING REGULATOR	(CN203)
(1/6)	CN160	CN161 OF MB-441	
	CN161	CN160 OF MB-441	

FOR VPR-1 BOARD

	VPR BOARD SHEET No.	CN113 A	Pin	CN113 B	VPR BOARD SHEET No.	
-2	(5/7)	GND-2	1	GND-2	(5/7)	-2
123-2B	(4/7)	CHARA SIG(X)	2	CHARA FRAME	(4/7)	123-2A
-2	(5/7)	GND-2	3	CHARA SIG(G)	(4/7)	123-3B
135-14	(4/7)	OUTPUT B-Y(G)	4	OUTPUT B-Y(X)	(4/7)	135-13
135-12	(4/7)	OUTPUT R-Y(G)	5	OUTPUT R-Y(X)	(4/7)	135-11
135-10	(4/7)	OUTPUT Y(G)	6	OUTPUT Y(X)	(4/7)	135-9
-2	(5/7)	GND-2	7	GND-2	(5/7)	-2
135-8	(4/7)	OUTPUT VIDEO 3(G)	8	OUTPUT VIDEO 3(X)	(4/7)	135-7
135-6	(4/7)	OUTPUT VIDEO 1/2(G)	9	OUTPUT VIDEO 1/2(X)	(4/7)	135-5
-2	(5/7)	GND-2	10	GND-2	(5/7)	-2
101-46B	(4/7)	VISC Y(G)	11	VISC Y(X)	(4/7)	101-45B
-2	(5/7)	GND-2	12	GND-2	(5/7)	-2
136-8	(1/7)	INPUT B-Y(G)	13	INPUT B-Y(X)	(1/7)	136-7
136-6	(1/7)	INPUT R-Y(G)	14	INPUT R-Y(X)	(1/7)	136-5
136-4	(1/7)	INPUT Y(G)	15	INPUT Y(X)	(1/7)	136-3
-2	(5/7)	GND-2	16	GND-2	(5/7)	-2
136-2	(6/7)	INPUT REF VIDEO(G)	17	INPUT REF VIDEO(X)	(6/7)	136-1
135-4	(6/7)	CF SET(G)	18	CF SET(X)	(6/7)	135-3
135-2	(5/7)	REF CONT 0	19	REF CONT 1	(5/7)	135-1
102-46A	(5/7)	TBC VPR JP1	20	NC	(4/7)	
102-47A	(5/7)	TBC VPR JP2	21	B-CAM CF	(3/7)	101-48B
101-48A	(3/7)	TBC 4FSC(G)	22	TBC 4FSC(X)	(3/7)	101-47A
-2	(5/7)	GND-2	23	GND-2	(5/7)	-2
110-14A	(2/7)	D1 DATA 0	24	D1 DATA 1	(2/7)	110-14B
110-15A	(2/7)	D1 DATA 2	25	D1 DATA 3	(2/7)	110-15B
110-16A	(2/7)	D1 DATA 4	26	D1 DATA 5	(2/7)	110-16B
110-17A	(2/7)	D1 DATA 6	27	D1 DATA 7	(2/7)	110-17B
110-18A	(2/7)	D1 DATA 8	28	D1 DATA 9	(2/7)	110-18B
110-19A	(2/7)	D1 HD	29	D1 VD	(2/7)	110-19B
110-20A	(2/7)	D1 CF0	30	D1 CF1	(2/7)	110-20B
110-21A	(2/7)	D1 CF2	31	D1 PARITY	(2/7)	110-21B
110-23B	(3/7)	D1 CK(G)	32	D1 CK(X)	(3/7)	110-23A
110-34A/34B, 113-32B	(2/7)	DIF GND 1	33	DIF GND 1	(2/7)	110-34A/34B, 113-33A
110-25A	(3/7)	D1/D2 DATA 0	34	D1/D2 DATA 1	(3/7)	110-25B
110-26A	(3/7)	D1/D2 DATA 2	35	D1/D2 DATA 3	(3/7)	110-26B
110-27A	(3/7)	D1/D2 DATA 4	36	D1/D2 DATA 5	(3/7)	110-27B
110-28A	(3/7)	D1/D2 DATA 6	37	D1/D2 DATA 7	(3/7)	110-28B
110-29A	(3/7)	D1/D2 DATA 8	38	D1/D2 DATA 9	(3/7)	110-29B
110-30A	(3/7)	D1/D2 HD	39	D1/D2 CF0	(3/7)	110-31A
110-31B	(3/7)	D1 CF INFO/D2 CF1	40	D1/D2 CF2	(3/7)	110-32A
110-33A	(3/7)	D1 DLY P/D2 SYNC	41	D1/D2 PARITY	(3/7)	110-32B
110-24A/24B, 113-42B	(3/7)	DIF GND 2	42	DIF GND 2	(3/7)	110-24A/24B, 113-42A
110-35B	(3/7)	DIF 4FSC(G)	43	DIF 4FSC(X)	(3/7)	110-35A
15V-2	(5/7)	REG +15V-2	44	REG +15V-2	(5/7)	15V-2
	(5/7)	REG +15V-2	45	REG +15V-2	(5/7)	
-15V-2	(5/7)	REG -15V-2	46	REG -15V-2	(5/7)	-15V-2
	(5/7)	REG -15V-2	47	REG -15V-2	(5/7)	
	(5/7)	GND-2	48	GND-2	(5/7)	
-2	(5/7)	GND-2	49	GND-2	(5/7)	-2
	(5/7)	GND-2	50	GND-2	(5/7)	

FOR VPR-1 BOARD

	VPR BOARD SHEET No.	CN114 A	Pin	CN114 B	VPR BOARD SHEET No.	
117-2A	(7/7)	DPR CK 18(G)	1	DPR CK 18(X)	(7/7)	117-2B
110-37B	(7/7)	DIF CK 27(G)	2	DIF CK 27(X)	(7/7)	110-37A
104-13A	(7/7)	REF CK 27(G)	3	REF CK 27(X)	(7/7)	104-12A
-2	(5/7)	GND-2	4	GND-2	(5/7)	-2
100-46A/46B, 114-5B	(2/7)	DEC GND	5	DEC GND	(2/7)	100-46A/46B, 114-5A
100-47A	(2/7)	DEC DATA 0	6	DEC DATA 1	(2/7)	100-47B
100-48A	(2/7)	DEC DATA 2	7	DEC DATA 3	(2/7)	100-48B
100-49A	(2/7)	DEC DATA 4	8	DEC DATA 5	(2/7)	100-49B
100-50A	(2/7)	DEC DATA 6	9	DEC DATA 7	(2/7)	100-50B
100-51A	(2/7)	DEC DATA 8	10	DEC DATA 9	(2/7)	100-51B
100-52A	(2/7)	DEC HD	11	DEC VD	(2/7)	100-52B
100-53A	(2/7)	DEC CF INFO	12	DEC PARITY	(2/7)	100-53B
100-54A	(2/7)	DEC CK(G)	13	DEC CK(X)	(2/7)	100-54B
100-43A	(2/7)	FR RST	14	CF RST	(2/7)	100-43B
100-44A	(2/7)	EXT 4FSC(G)	15	EXT 4FSC(X)	(2/7)	100-44B
-2	(5/7)	GND-2	16	GND-2	(5/7)	-2
100-36A	(5/7)	DEC EVR DATA	17	DEC EVR CK	(5/7)	100-36B
100-37A	(5/7)	C 100/75	18	L;POWER ON RESET	(5/7)	100-22A
100-39A, 112-15A	(5/7)	MODE DATA	19	STATUS DATA	(5/7)	100-39B, 112-15B
100-40A, 112-14B	(5/7)	DD START	20	DD SCK	(5/7)	100-40B, 112-14A
112-16A	(5/7)	DIF LOAD	21	DEC LOAD	(5/7)	100-41A
112-16B	(5/7)	DIF DO	22	DEC DO	(5/7)	100-41B
110-39A	(7/7)	DIF SIG FLAG	23	DEC PLL LOCK	(5/7)	100-14B
110-22A	(3/7)	CRCC	24	DIF VPR JP2	(5/7)	110-39B
110-42A	(5/7)	DIF EVR DATA	25	CSIT/COMP	(3/7)	110-22B
110-43A	(5/7)	L;DIF EVR RESET	26	DIF EVR CK	(5/7)	110-42B
101-49A, 114-27B	(3/7)	TBC GND	27	TBC GND	(3/7)	101-49A, 114-27A
101-49B	(3/7)	B-CAM DATA 0	28	B-CAM DATA 1	(3/7)	101-50A
101-50B	(3/7)	B-CAM DATA 2	29	B-CAM DATA 3	(3/7)	101-51A
101-51B	(3/7)	B-CAM DATA 4	30	B-CAM DATA 5	(3/7)	101-52A
101-52B	(3/7)	B-CAM DATA 6	31	B-CAM DATA 7	(3/7)	101-53A
101-53B	(3/7)	B-CAM DATA 8	32	B-CAM DATA 9	(3/7)	101-54A
101-55B	(3/7)	B-CAM HD	33	B-CAM VD	(3/7)	101-55A
101-29A	(3/7)	B-CAM CF INFO	34	B-CAM PARITY	(3/7)	101-54B
101-32A	(3/7)	H;V SHIFT	35	H;H SHIFT	(3/7)	101-18A
101-56B	(2/7)	TBC CK 27(G)	36	TBC CK 27(X)	(2/7)	101-56A
-2	(5/7)	GND-2	37	GND-2	(5/7)	-2
117-36A	(2/7)	DPR CK 27(G)	38	DPR CK 27(X)	(2/7)	117-36B
117-37A	(2/7)	REC DATA 0	39	REC DATA 1	(2/7)	117-37B
117-38A	(2/7)	REC DATA 2	40	REC DATA 3	(2/7)	117-38B
117-39A	(2/7)	REC DATA 4	41	REC DATA 5	(2/7)	117-39B
117-40A	(2/7)	REC DATA 6	42	REC DATA 7	(2/7)	117-40B
117-41A	(2/7)	REC DATA 8	43	REC DATA 9	(2/7)	117-41B
117-42A	(2/7)	REC HD	44	REC VD	(2/7)	117-42B
117-43A	(2/7)	REC CF INFO	45	REC PARITY	(2/7)	117-43B
114-46B, 117-44A/44B	(2/7)	REC GND	46	REC GND	(2/7)	114-46A, 117-44A/44B
122-12A	(5/7)	SYIF2 RDY	47	SYIF2 RES	(5/7)	122-12B
122-13A	(5/7)	SYIF2 CMD	48	SYIF2 SCK	(5/7)	122-13B
122-14A	(5/7)	L;VPR CS	49	REC AU ID0	(2/7)	117-21A
117-21B	(2/7)	REC AU ID1	50	REC AU ID2	(2/7)	117-22A

FOR VPR-1 BOARD

	VPR BOARD SHEET No.	CN115 A	Pin	CN115 B	VPR BOARD SHEET No.	
	(5/7)	GND-2	1	GND-2	(5/7)	
-2	(5/7)	GND-2	2	GND-2	(5/7)	-2
	(5/7)	GND-2	3	GND-2	(5/7)	
8V-2	(5/7)	REG +8V-2	4	REG +8V-2	(5/7)	8V-2
	(5/7)	REG +8V-2	5	REG +8V-2	(5/7)	
-8V-2	(5/7)	REG -8V-2	6	REG -8V-2	(5/7)	-8V-2
	(5/7)	REG -8V-2	7	REG -8V-2	(5/7)	
5V-2	(5/7)	REG +5V-2	8	REG +5V-2	(5/7)	5V-2
	(5/7)	REG +5V-2	9	REG +5V-2	(5/7)	
3.3V-2	(5/7)	REG +3.3V-2	10	REG +3.3V-2	(5/7)	3 3V-2
	(5/7)	REG +3.3V-2	11	REG +3.3V-2	(5/7)	
	(5/7)	REG +3.3V-2	12	REG +3.3V-2	(5/7)	
	(5/7)	REG +3.3V-2	13	REG +3.3V-2	(5/7)	
118-14A	(3/7)	PB DATA 0	14	PB DATA 1	(3/7)	118-14B
118-15A	(3/7)	PB DATA 2	15	PB DATA 3	(3/7)	118-15B
118-16A	(3/7)	PB DATA 4	16	PB DATA 5	(3/7)	118-16B
118-17A	(3/7)	PB DATA 6	17	PB DATA 7	(3/7)	118-17B
118-18A	(3/7)	PB DATA 8	18	PB DATA 9	(3/7)	118-18B
118-19A	(3/7)	PB HD	19	PB VD	(3/7)	118-19B
118-20A	(3/7)	PB CF INFO	20	PB PARITY	(3/7)	118-20B
115-21B, 118-21A/21B	(3/7)	PB GND	21	PB GND	(3/7)	115-21A, 118-21A/21B
123-4A	(7/7)	SS CK 13.5(G)	22	SS CK 13.5(X)	(7/7)	123-3A
118-23A	(7/7)	DPR CK 13.5(G)	23	DPR CK 13.5(X)	(7/7)	118-23B
118-25A	(7/7)	AUDIO VD	24	H PITCH COR	(7/7)	118-25B
118-26A	(5/7)	DPR VPR JP2	25	DPR CF0	(7/7)	118-35A
121-23A	(7/7)	AU 512FSO(G)	26	AU 512FSO(X)	(7/7)	121-24A
118-27A	(7/7)	DPR AU 256FSO(G)	27	DPR AU 256FSO(X)	(7/7)	118-27B
112-25A	(7/7)	DIF AU 128FSO(G)	28	DIF AU 128FSO(X)	(7/7)	112-25B
121-25A	(7/7)	AU 128FSO(G)	29	AU 128FSO(X)	(7/7)	121-26A
112-27B	(7/7)	DIF AU 64FSO	30	AU 64FSO	(7/7)	121-24B
112-29B	(7/7)	DIF AU FSO	31	DPR AU 64FSO	(7/7)	118-26B
118-31A	(7/7)	DPR AU FSO	32	AU FSO	(7/7)	121-27A
118-28A	(7/7)	DPR 256FSOP(G)	33	DPR 256FSOP(X)	(7/7)	118-28B
121-25B	(7/7)	256FSOP(G)	34	256FSOP(X)	(7/7)	121-26B
121-28B	(7/7)	128FSOP(G)	35	128FSOP(X)	(7/7)	121-28A
121-27B	(7/7)	64FSOP	36	32FSOP	(7/7)	121-29A
118-31B	(7/7)	DPR FSOP	37	FSOP	(7/7)	121-29B
121-22A	(7/7)	APR PLL LOCK	38	APR VPR JP4	(5/7)	121-23B
118-29A	(7/7)	DPR AU 256FSP(G)	39	DPR AU 256FSP(X)	(7/7)	118-29B
118-30A	(7/7)	DE 256FS(G)	40	DPR AU FSP	(5/7)	121-21B
118-24A	(7/7)	DE 128FS(G)	41	DE 256FS(X)	(7/7)	118-30B
118-32B	(7/7)	DE FS	42	DE 128FS(X)	(7/7)	118-24B
118-33B	(7/7)	REF VD	43	SS VD	(7/7)	123-1A
118-33A	(7/7)	REF HD	44	ADV VD	(7/7)	118-34B
123-1B	(7/7)	SS HD	45	AU PLL LOCK	(7/7)	118-35B
118-34A	(7/7)	ADV HD	46	TBC VD	(7/7)	101-45A
101-46A	(7/7)	TBC HD	47	ANA Ō/E	(7/7)	101-47B, 104-18B
102-43A	(5/7)	TBC VPR JP5	48	TBC VD 2	(7/7)	102-44A
102-45A	(5/7)	TBC VPR JP7	49	SS CF	(2/7)	123-38A
123-4B	(5/7)	L;SS RESET	50	VPR SS JP1	(5/7)	123-38B

	CN136	Pin		
113-17B	INPUT REF VIDEO(X)	1	9	CP-218, 413-1
113-17A	INPUT REF VIDEO(G)	2	8	
113-15B	INPUT Y(X)	3	9	CP-218, 413-3
113-15A	INPUT Y(G)	4	8	
113-14B	INPUT R-Y(X)	5	9	CP-218, 413-5
113-14A	INPUT R-Y(G)	6	8	
113-13B	INPUT B-Y(X)	7	9	CP-218, 413-7
113-13A	INPUT B-Y(G)	8	8	

	CN135	Pin		
113-19B	REF CONT 1	1	9	CP-218, 412-1
113-19A	REF CONT 0	2	8	CP-218, 412-2
113-18B	CF SET(X)	3	9	CP-218, 412-3
113-18A	CF SET(G)	4	8	
113-9B	OUTPUT VIDEO 1/2(X)	5	9	CP-218, 412-5
113-9A	OUTPUT VIDEO 1/2(G)	6	8	
113-8B	OUTPUT VIDEO 3(X)	7	9	CP-218, 412-7
113-8A	OUTPUT VIDEO 3(G)	8	8	
113-6B	OUTPUT Y(X)	9	9	CP-218, 412-9
113-6A	OUTPUT Y(G)	10	8	
113-5B	OUTPUT R-Y(X)	11	9	CP-218, 412-11
113-5A	OUTPUT R-Y(G)	12	8	
113-4B	OUTPUT B-Y(X)	13	9	CP-218, 412-13
113-4A	OUTPUT B-Y(G)	14	8	

LOT NO.	BOARD NO.
302-306	1-648-560-11
307-402	1-648-560-12
403-	1-648-560-13

Mother board
MB-441 BOARD (3/6)

BOARD NO. 1-648-560-11, 12, 13
BOARD' S LOT NO. 302-
DVW-A500(J, UC) :MB-441A MCB
DVW-A500P(EK) :MB-441A MCB
DVW-A500P(UC) :MB-441A MCB
DVW-500 (J, UC) :MB-441 MCB
DVW-500P (EK) :MB-441 MCB
DVW-500P (UC) :MB-441 MCB

DVW-MB441-ALL-REC-S/M-05

CN113
CN114
CN115
CN135
CN136

http://getMANUAL.com
 MB-441 (4/6)

MB-441 BOARD SHEET No.	MB-441 BOARD REF. No.	CONNECTION	
(1/6)	CN100	DEC-65	BKDW-505/506
	CN101	TBC-23	DVW-A500/A500P ONLY (MB-441A MCB)
	CN102	TBC-24	
	CN103	DM-89	
	CN104	AP-28	
(2/6)	CN105	CUE-1AP/1A/1	
	CN106	EQ-45A/45	
	CN110	DIF-16	
	CN112		
(3/6)	CN113	VPR-1	
	CN114		
	CN115		
(4/6)	CN116	DPR-36	
	CN117		
	CN118		
(5/6)	CN119	APR-1	
	CN120		
	CN121		
(6/6)	CN122	SS-52A/52	
	CN123		
	CN124		
	CN130	RS232C CONNECTOR	
(5/6)	CN131	VIDEO CONTROL CONNECTOR	
(6/6)	CN132	REMOTE 1 IN(9P) CONNECTOR	
	CN133	REMOTE 1 OUT(9P) CONNECTOR	
	CN134	CONTROL PANEL CONNECTOR	
(3/6)	CN135	CP-218	(CN412)
	CN136		(CN413)
(5/6)	CN137	CP-220	(CN404)
(1/6)	CN138	CP-218	(CN414)
	CN139		(CN415)
(2/6)	CN140	CP-220	(CN402)
(5/6)	CN142		(CN400)
	CN143		(CN401)
	CN144		(CN403)
	CN145	VR-152	(CN512)
	CN147	FP-58	(CN500)
(6/6)	CN148	SWC-19	(CN148)
	CN149	HN-181	(CN201)
	CN150	FAN MOTOR(R)	
	CN151	SWITCHING REGULATOR	(CN201)
	CN152		(CN202)
	CN153		(CN206)
	CN154	HN-181	(CN205)
	CN155	NO CONNECTION	
	CN156	SWITCHING REGULATOR	(CN203)
(1/6)	CN160	CN161 OF MB-441	
	CN161	CN160 OF MB-441	

FOR DPR-36 BOARD

	DPR BOARD SHEET No.	CN116 A		CN116 B	DPR BOARD SHEET No.	
-2	(6/7)	GND-2	1	GND-2	(6/7)	-2
-2	(6/7)	GND-2	2	GND-2	(6/7)	-2
	(7/7)	NC	3	NC	(7/7)	
122-19B	(3/7)	VIDEO INDEX RDY	4	DT TR JMP	(2/7)	124-44A
124-44B	(7/7)	SV 1/2 VD	5	MODE TEST	(3/7)	122-7A
122-20A	(1/7)	PAD 0	6	PAD 1	(1/7)	122-20B
122-21A	(1/7)	PAD 2	7	PAD 3	(1/7)	122-21B
122-22A	(1/7)	PAD 4	8	PAD 5	(1/7)	122-22B
122-23A	(1/7)	PAD 6	9	PAD 7	(1/7)	122-23B
122-24A	(1/7)	PS 0	10	PS 1	(1/7)	122-24B
122-25A	(2/7)	PSTB	11	PCS 0	(1/7)	122-26A
122-34B	(1/7)	L;SYS RESET 3.3V	12	ERROR FLAG	(7/7)	122-35B
122-32B	(7/7)	SEG SW	13	WNOVR OFF	(2/7)	122-7B
	(7/7)	NC	14	NC	(7/7)	
106-35A	(1/7)	REC CK(G)	15	REC CK(X)	(1/7)	106-35B
106-36A	(1/7)	L;PRCD OFF	16	REC PRTY	(1/7)	106-36B
106-37B	(1/7)	REC AC D0	17	REC AC D1	(1/7)	106-37A
106-38B	(1/7)	REC AC D2	18	REC AC D3	(1/7)	106-38A
106-39B	(1/7)	REC BD D0	19	REC BD D1	(1/7)	106-39A
106-40B	(1/7)	REC BD D2	20	REC BD D3	(1/7)	106-40A
106-41A	(1/7)	L;REC C EN	21	L;REC A EN	(1/7)	106-41B
106-42A	(1/7)	L;REC D EN	22	L;REC B EN	(1/7)	106-42B
106-43B	(5/7)	ADV AC D0	23	ADV AC D1	(5/7)	106-43A
106-44B	(5/7)	ADV AC D2	24	ADV AC D3	(5/7)	106-44A
106-45A	(5/7)	ADV AC CK(G)	25	ADV AC CK(X)	(5/7)	106-45B
106-46A	(5/7)	ADV BD PRTY	26	ADV AC PRTY	(5/7)	106-46B
106-47B	(5/7)	ADV BD D0	27	ADV BD D1	(5/7)	106-47A
106-48B	(5/7)	ADV BD D2	28	ADV BD D3	(5/7)	106-48A
106-49A	(5/7)	ADV BD CK(G)	29	ADV BD CK(X)	(5/7)	106-49B
106-50B	(5/7)	CNF AC D0	30	CNF AC D1	(5/7)	106-50A
106-51B	(5/7)	CNF AC D2	31	CNF AC D3	(5/7)	106-51A
106-52A	(5/7)	CNF AC CK(G)	32	CNF AC CK(X)	(5/7)	106-52B
106-53A	(5/7)	CNF BD PRTY	33	CNF AC PRTY	(5/7)	106-53B
106-54B	(5/7)	CNF BD D0	34	CNF BD D1	(5/7)	106-54A
106-55B	(5/7)	CNF BD D2	35	CNF BD D3	(5/7)	106-55A
106-56A	(5/7)	CNF BD CK(G)	36	CNF BD CK(X)	(5/7)	106-56B
NC	(1/7)	CRC OUT	37	EQ DPR JP0	(1/7)	106-28A
124-14A	(6/7)	DE4NP	38	EQ DPR JP1	(1/7)	106-29A
	(7/7)	NC	39	NC	(7/7)	
	(7/7)	NC	40	NC	(7/7)	
123-39A	(1/7)	SEG 0	41	SEG 1	(1/7)	123-39B
123-40A	(1/7)	SEG 2(FIELD)	42	START PLS	(1/7)	123-50B
	(7/7)	NC	43	NC	(7/7)	
15V-2	(6/7)	REG +15V-2	44	REG +15V-2	(6/7)	15V-2
	(6/7)	REG +15V-2	45	REG +15V-2	(6/7)	
-15V-2	(6/7)	REG -15V-2	46	REG -15V-2	(6/7)	-15V-2
	(6/7)	REG -15V-2	47	REG -15V-2	(6/7)	
	(6/7)	GND-2	48	GND-2	(6/7)	
-2	(6/7)	GND-2	49	GND-2	(6/7)	-2
	(6/7)	GND-2	50	GND-2	(6/7)	

FOR DPR-36 BOARD

	DPR BOARD SHEET No.	CN117 A		CN117 B	DPR BOARD SHEET No.	
-2	(6/7)	GND-2	1	GND-2	(6/7)	-2
114-1A	(3/7)	DPR CK 18(G)	2	DPR CK 18(X)	(3/7)	114-1B
-2	(6/7)	GND-2	3	GND-2	(6/7)	-2
	(7/7)	NC	4	DT TR JUMP	(7/7)	NC
110-40A	(7/7)	DPR DIF JP0	5	DPR DIF JP1	(7/7)	110-40B
110-41A	(7/7)	DPR DIF JP2	6	NC	(7/7)	
106-32B	(5/7)	METRIC ADV AC	7	METRIC ADV BD	(5/7)	106-32A
106-33B	(5/7)	METRIC CNF AC	8	METRIC CNF BD	(5/7)	106-33A
	(7/7)	NC	9	MODE PR	(5/7)	122-40A
	(7/7)	NC	10	NC	(7/7)	
103-31A	(6/7)	Y RF ENVELOPE(X)	11	Y RF ENVELOPE(G)	(6/7)	103-32A
103-33A	(6/7)	C RF ENVELOPE(X)	12	C RF ENVELOPE(G)	(6/7)	103-34A
-2	(6/7)	GND-2	13	GND-2	(6/7)	-2
	(7/7)	NC	14	NC	(7/7)	
	(7/7)	NC	15	GND-2	(6/7)	-2
106-30B	(6/7)	CNF AC ENV	16	CNF BD ENV	(6/7)	106-31B
106-28B	(6/7)	ADV AC ENV	17	ADV BD ENV	(6/7)	106-29B
	(7/7)	NC	18	GND-2	(6/7)	-2
106-21B	(6/7)	PB SAT REC AC	19	EQ GND1	(6/7)	123-26B
106-23B	(6/7)	PB SAT REC BD	20	EQ GND2	(6/7)	123-28B
114-49B	(1/7)	REC AU ID0	21	REC AU ID1	(1/7)	114-50A
114-50B	(1/7)	REC AU ID2	22	NC	(7/7)	
-2	(6/7)	GND-2	23	NC	(7/7)	
123-41A	(7/7)	DT SEG 0	24	DT SEG 1	(7/7)	123-41B
123-40B	(7/7)	DT 2F	25	SYNC PLS	(7/7)	123-42A
123-42B	(3/7)	PP SV-REF	26	NC	(7/7)	
123-43A	(6/7)	H;SV LOCK	27	DIRECTION	(2/7)	123-43B
123-44A	(7/7)	PB 2F	28	PB 4F	(7/7)	123-44B
123-45A	(7/7)	PB 8F	29	CAP 8FG	(2/7)	123-45B
123-46A	(5/7)	5F INERTIA	30	DT JUMP	(2/7)	123-46B
123-47A	(5/7)	REC AC SEL	31	REC BD SEL	(5/7)	123-47B
123-48A	(5/7)	CNF AC SEL	32	CNF BD SEL	(5/7)	123-48B
123-49A	(5/7)	ADV AC SEL	33	ADV BD SEL	(5/7)	123-49B
123-50A	(1/7)	L;B-CAM 3.3V	34	NC	(7/7)	
	(7/7)	NC	35	NC	(7/7)	
114-38A	(3/7)	DPR CK 27(G)	36	DPR CK 27(X)	(3/7)	114-38B
114-39A	(1/7)	REC DATA 0	37	REC DATA 1	(1/7)	114-39B
114-40A	(1/7)	REC DATA 2	38	REC DATA 3	(1/7)	114-40B
114-41A	(1/7)	REC DATA 4	39	REC DATA 5	(1/7)	114-41B
114-42A	(1/7)	REC DATA 6	40	REC DATA 7	(1/7)	114-42B
114-43A	(1/7)	REC DATA 8	41	REC DATA 9	(1/7)	114-43B
114-44A	(1/7)	REC HD	42	REC VD	(1/7)	114-44B
114-45A	(1/7)	REC CF INFO	43	REC PARITY	(1/7)	114-45B
114-46A/46B, 117-44B	(1/7)	REC GND	44	REC GND	(1/7)	114-46A/46B, 117-44A
	(7/7)	NC	45	NC	(7/7)	
112-34A	(7/7)	SIF T 5/6	46	SIF T 7/8	(7/7)	112-34B
112-35A	(7/7)	SIF R 5/6	47	SIF R 7/8	(7/7)	112-35B
112-36A	(7/7)	SIF MUTE 5	48	SIF MUTE 6	(7/7)	112-36B
122-37A	(7/7)	SIF MUTE 7	49	SIF MUTE 8	(7/7)	112-37B
-2	(6/7)	GND-2	50	GND-2	(6/7)	-2

FOR DPR-36 BOARD

	DPR BOARD SHEET No.	CN118 A		CN118 B	DPR BOARD SHEET No.	
	(6/7)	GND-2	1	GND-2	(6/7)	
-2	(6/7)	GND-2	2	GND-2	(6/7)	-2
	(6/7)	GND-2	3	GND-2	(6/7)	
8V-2	(6/7)	REG +8V-2	4	REG +8V-2	(6/7)	8V-2
	(6/7)	REG +8V-2	5	REG +8V-2	(6/7)	
-8V-2	(6/7)	REG -8V-2	6	REG -8V-2	(6/7)	-8V-2
	(6/7)	REG -8V-2	7	REG -8V-2	(6/7)	
5V-2	(6/7)	REG +5V-2	8	REG +5V-2	(6/7)	5V-2
	(6/7)	REG +5V-2	9	REG +5V-2	(6/7)	
3.3V-2	(6/7)	REG +3.3V-2	10	REG +3.3V-2	(6/7)	3.3V-2
	(6/7)	REG +3.3V-2	11	REG +3.3V-2	(6/7)	
	(6/7)	REG +3.3V-2	12	REG +3.3V-2	(6/7)	
	(6/7)	REG +3.3V-2	13	REG +3.3V-2	(6/7)	
115-14A	(3/7)	PB DATA 0	14	PB DATA 1	(3/7)	115-14B
115-15A	(3/7)	PB DATA 2	15	PB DATA 3	(3/7)	115-15B
115-16A	(3/7)	PB DATA 4	16	PB DATA 5	(3/7)	115-16B
115-17A	(3/7)	PB DATA 6	17	PB DATA 7	(3/7)	115-17B
115-18A	(3/7)	PB DATA 8	18	PB DATA 9	(3/7)	115-18B
115-19A	(3/7)	PB HD	19	PB VD	(3/7)	115-19B
115-20A	(3/7)	PB CF INFO	20	PB PARITY	(3/7)	115-20B
115-21A/21B, 118-21B	(3/7)	PB GND	21	PB GND	(3/7)	115-21A/21B, 118-21A
-2	(6/7)	GND-2	22	GND-2	(6/7)	-2
115-23A	(1/7)	DPR CK 13.5(G)	23	DPR CK 13.5(X)	(1/7)	115-23B
115-41A	(1/7)	DE 128FS(G)	24	DE 128FS(X)	(1/7)	115-42B
115-24A	(3/7)	AUDIO VD	25	H PITCH COR	(3/7)	115-24B
115-25A	(3/7)	DPR VPR JP2	26	DPR AU 64FSO	(1/7)	115-31B
115-27A	(1/7)	DPR AU 256FSO(G)	27	DPR AU 256FSO(X)	(1/7)	115-27B
115-33A	(1/7)	DPR 256FSOP(G)	28	DPR 256FSOP(X)	(1/7)	115-33B
115-39A	(3/7)	DPR AU 256FSP(G)	29	DPR AU 256FSP(X)	(3/7)	115-39B
115-40A	(1/7)	DE 256FS(G)	30	DE 256FS(X)	(1/7)	115-41B
115-32A	(1/7)	DPR AU FSO	31	DPR FSOP	(1/7)	115-37A
NC	(3/7)	DPR AU FSP	32	DE FS	(1/7)	115-42A
115-44A	(3/7)	REF HD	33	REF VD	(3/7)	115-43A
115-46A	(3/7)	ADV HD	34	ADV VD	(3/7)	115-44B
115-25B	(3/7)	DPR CF0	35	AU PLL LOCK	(2/7)	115-45B
121-30A	(2/7)	AD R 1/2	36	DA T 1/2	(2/7)	121-30B
121-31A	(2/7)	AD R 3/4	37	DA T 3/4	(2/7)	121-31B
121-32A	(2/7)	AES R 1/2	38	AES T 1/2	(2/7)	121-32B
121-33A	(2/7)	AES R 3/4	39	AES T 3/4	(2/7)	121-33B
121-34A	(2/7)	AES MUTE 1/2	40	MON L/R	(2/7)	121-34B
121-35A	(2/7)	AES MUTE 3/4	41	AU SR CS	(3/7)	121-35B
121-36B	(2/7)	AU SR START	42	AU SR CLOCK	(2/7)	121-37B
121-38B	(2/7)	AU SR OUT	43	AU SR IN	(2/7)	121-39B
121-40B	(2/7)	L;POWER ON PULSE	44	APR JP0	(3/7)	121-41B
121-42B	(3/7)	APR JP1	45	APR JP2	(3/7)	121-43B
112-39A	(2/7)	SIF T 1/2	46	SIF T 3/4	(2/7)	112-39B
112-40A	(2/7)	SIF R 1/2	47	SIF R 3/4	(2/7)	112-40B
112-41A	(2/7)	SIF MUTE 1	48	SIF MUTE 2	(2/7)	112-41B
112-42A	(2/7)	SIF MUTE 3	49	SIF MUTE 4	(2/7)	112-42B
-2	(6/7)	GND-2	50	GND-2	(6/7)	-2

LOT NO.	BOARD NO.
302-306	1-648-560-11
307-402	1-648-560-12
403-	1-648-560-13

Mother board

MB-441 BOARD (4/6)

BOARD NO. 1-648-560-11, 12, 13
BOARD' S LOT NO. 302-
DVW-A500(J, UC) :MB-441A MCB
DVW-A500P(EK) :MB-441A MCB
DVW-A500P(UC) :MB-441A MCB
DVW-500 (J, UC) :MB-441 MCB
DVW-500P (EK) :MB-441 MCB
DVW-500P (UC) :MB-441 MCB

DVW-MB441-ALL-REC-S/M-05

CN116
CN117
CN118

MB-441 BOARD SHEET No.	MB-441 BOARD REF. No.	CONNECTION	
(1/6)	CN100	DEC-65	BKDW-505/506
	CN101	TBC-23	DVW-A500/A500P ONLY (MB-441A MCB)
	CN102	TBC-24	
	CN103	DM-89	
	CN104	AP-28	
(2/6)	CN105	CUE-1AP/1A/1	
	CN106	EQ-45A/45	
	CN110, CN112	DIF-16	
(3/6)	CN113, CN114, CN115	VPR-1	
(4/6)	CN116, CN117, CN118	DPR-36	
(5/6)	CN119, CN120, CN121	APR-1	
(6/6)	CN122, CN123, CN124	SS-52A/52	
	CN130	RS232C CONNECTOR	
(5/6)	CN131	VIDEO CONTROL CONNECTOR	
(6/6)	CN132	REMOTE 1 IN(9P) CONNECTOR	
	CN133	REMOTE 1 OUT(9P) CONNECTOR	
	CN134	CONTROL PANEL CONNECTOR	
(3/6)	CN135	CP-218	(CN412)
	CN136	CP-218	(CN413)
(5/6)	CN137	CP-220	(CN404)
(1/6)	CN138	CP-218	(CN414)
	CN139	CP-218	(CN415)
(2/6)	CN140	CP-220	(CN402)
(5/6)	CN142	CP-220	(CN400)
	CN143	CP-220	(CN401)
	CN144	CP-220	(CN403)
	CN145	VR-152	(CN512)
	CN147	FP-58	(CN500)
(6/6)	CN148	SWC-19	(CN148)
	CN149	HN-181	(CN201)
	CN150	FAN MOTOR(R)	
	CN151	SWITCHING REGULATOR	(CN201)
	CN152	SWITCHING REGULATOR	(CN202)
	CN153	SWITCHING REGULATOR	(CN206)
	CN154	HN-181	(CN205)
	CN155	NO CONNECTION	
	CN156	SWITCHING REGULATOR	(CN203)
(1/6)	CN160	CN161 OF MB-441	
	CN161	CN160 OF MB-441	

FOR APR-1 BOARD

From	APR BOARD SHEET No.	CN119 A	Pin	CN119 B	APR BOARD SHEET No.	To
142-2	(1/9)	CH-1 IN(X)	1	CH-1 IN(Y)	(1/9)	142-3
142-4	(1/9)	CH-1 IN(G)	2	CH-1 IN(G)	(1/9)	142-4
142-5	(1/9)	CH-2 IN(X)	3	CH-2 IN(Y)	(1/9)	142-6
142-7	(1/9)	CH-2 IN(G)	4	CH-2 IN(G)	(1/9)	142-7
142-8	(2/9)	CH-3 IN(X)	5	CH-3 IN(Y)	(2/9)	142-9
142-10	(2/9)	CH-3 IN(G)	6	CH-3 IN(G)	(2/9)	142-10
142-11	(2/9)	CH-4 IN(X)	7	CH-4 IN(Y)	(2/9)	142-12
142-13	(2/9)	CH-4 IN(G)	8	CH-4 IN(G)	(2/9)	142-13
	(9/9)	NC	9	NC	(9/9)	
	(9/9)	NC	10	NC	(9/9)	
	(9/9)	NC	11	NC	(9/9)	
	(9/9)	NC	12	NC	(9/9)	
	(9/9)	NC	13	NC	(9/9)	
	(9/9)	NC	14	NC	(9/9)	
	(9/9)	NC	15	NC	(9/9)	
	(9/9)	NC	16	NC	(9/9)	
104-47A	(1/9)	B PB CH-1(X)	17	B PB CH-1(X)	(1/9)	104-47A
104-47B	(1/9)	B PB CH-1(G)	18	B PB CH-1(G)	(1/9)	104-47B
104-49A	(1/9)	B PB CH-2(X)	19	B PB CH-2(X)	(1/9)	104-49A
104-49B	(1/9)	B PB CH-2(G)	20	B PB CH-2(G)	(1/9)	104-49B
104-51A	(2/9)	B PB CH-3(X)	21	B PB CH-3(X)	(2/9)	104-51A
104-51B	(2/9)	B PB CH-3(G)	22	B PB CH-3(G)	(2/9)	104-51B
104-53A	(2/9)	B PB CH-4(X)	23	B PB CH-4(X)	(2/9)	104-53A
104-53B	(2/9)	B PB CH-4(G)	24	B PB CH-4(G)	(2/9)	104-53B
	(9/9)	NC	25	NC	(9/9)	
143-1	(3/9)	CH-1 OUT(X)	26	CH-1 OUT(Y)	(3/9)	143-2
143-3	(3/9)	CH-1 OUT(G)	27	CH-1 OUT(G)	(3/9)	143-3
143-4	(3/9)	CH-2 OUT(X)	28	CH-2 OUT(Y)	(3/9)	143-5
143-6	(3/9)	CH-2 OUT(G)	29	CH-2 OUT(G)	(3/9)	143-6
143-7	(4/9)	CH-3 OUT(X)	30	CH-3 OUT(Y)	(4/9)	143-8
143-9	(4/9)	CH-3 OUT(G)	31	CH-3 OUT(G)	(4/9)	143-9
143-10	(4/9)	CH-4 OUT(X)	32	CH-4 OUT(Y)	(4/9)	143-11
143-12	(4/9)	CH-4 OUT(G)	33	CH-4 OUT(G)	(4/9)	143-12
144-1	(5/9)	MONITOR L OUT(X)	34	MONITOR L OUT(Y)	(5/9)	144-2
144-3	(5/9)	MONITOR L OUT(G)	35	MONITOR L OUT(G)	(5/9)	144-3
144-4	(5/9)	MONITOR R OUT(X)	36	MONITOR R OUT(Y)	(5/9)	144-5
144-6	(5/9)	MONITOR R OUT(G)	37	MONITOR R OUT(G)	(5/9)	144-6
137-1	(1/9)	CH-1 MIC ON/OFF	38	CH-2 MIC ON/OFF	(1/9)	137-2
137-3	(2/9)	CH-3 MIC ON/OFF	39	CH-4 MIC ON/OFF	(2/9)	137-4
105-35A	(5/9)	CUE MONITOR(X)	40	CUE MONITOR(X)	(5/9)	105-35A
105-35B	(5/9)	CUE MONITOR(G)	41	CUE MONITOR(G)	(5/9)	105-35B
	(9/9)	NC	42	NC	(9/9)	
	(9/9)	NC	43	NC	(9/9)	
15V-2	(8/9)	REG +15V-2	44	REG +15V-2	(8/9)	15V-2
	(8/9)	REG +15V-2	45	REG +15V-2	(8/9)	
-15V-2	(8/9)	REG -15V-2	46	REG -15V-2	(8/9)	-15V-2
	(8/9)	REG -15V-2	47	REG -15V-2	(8/9)	
	(8/9)	GND-2	48	GND-2	(8/9)	
-2	(8/9)	GND-2	49	GND-2	(8/9)	-2
	(8/9)	GND-2	50	GND-2	(8/9)	

FOR APR-1 BOARD

From	APR BOARD SHEET No.	CN120 A	Pin	CN120 B	APR BOARD SHEET No.	To
	(9/9)	NC	1	NC	(9/9)	
	(9/9)	NC	2	NC	(9/9)	
	(9/9)	NC	3	NC	(9/9)	
	(9/9)	NC	4	NC	(9/9)	
	(9/9)	NC	5	NC	(9/9)	
	(9/9)	NC	6	NC	(9/9)	
	(9/9)	NC	7	NC	(9/9)	
	(9/9)	NC	8	NC	(9/9)	
	(9/9)	NC	9	NC	(9/9)	
	(9/9)	NC	10	NC	(9/9)	
	(9/9)	NC	11	NC	(9/9)	
	(9/9)	NC	12	NC	(9/9)	
	(9/9)	NC	13	NC	(9/9)	
	(9/9)	NC	14	NC	(9/9)	
	(9/9)	NC	15	NC	(9/9)	
	(9/9)	NC	16	NC	(9/9)	
	(9/9)	NC	17	NC	(9/9)	
	(9/9)	NC	18	NC	(9/9)	
	(9/9)	NC	19	NC	(9/9)	
	(9/9)	NC	20	NC	(9/9)	
	(9/9)	NC	21	NC	(9/9)	
	(9/9)	NC	22	NC	(9/9)	
	(9/9)	NC	23	NC	(9/9)	
	(9/9)	NC	24	NC	(9/9)	
NC	(7/9)	SW0	25	SW1	(7/9)	NC
105-19A	(9/9)	CUE JP0	26	CUE JP1	(9/9)	105-19B
	(9/9)	NC	27	NC	(9/9)	
145-1	(5/9)	MONI L(X)	28	MONI L(G)	(5/9)	145-2
145-4	(5/9)	MONI L VAR(G)	29	MONI L VAR(X)	(5/9)	145-3
145-5	(5/9)	MONI R(X)	30	MONI R(G)	(5/9)	145-6
145-8	(5/9)	MONI R VAR(G)	31	MONI R VAR(X)	(5/9)	145-7
	(9/9)	NC	32	NC	(9/9)	
147-7	(1/9)	CH-1 REC GAIN	33	CH-2 REC GAIN	(1/9)	147-8
147-9	(2/9)	CH-3 REC GAIN	34	CH-4 REC GAIN	(2/9)	147-10
147-11	(1/9)	REC GAIN GND	35	REC GAIN GND	(1/9)	147-11
105-33A	(7/9)	CUE PEAK SIGNAL	36	H;SV LOCK	(9/9)	123-43A
105-43B	(7/9)	CUE TEST	37	L;DT LOCK	(7/9)	123-8B
105-44A	(7/9)	LTC ERASE DET	38	CUE TEST SIG(X)	(8/9)	105-37A
105-45A	(7/9)	FULL ERASE DET	39	CUE ERASE DET	(7/9)	105-45B
105-46A	(7/9)	CUE EE DET	40	CUE BIAS DET	(7/9)	105-46B
105-47A	(7/9)	L;LTC EQ ON	41	CUE OUT DET	(7/9)	105-47B
105-48A	(7/9)	H;CUE ERASE ON	42	H;LTC ERASE ON	(7/9)	105-48B
105-49A	(7/9)	OSC H;OFF/L;ON	43	H;FULL ERASE ON	(7/9)	105-49B
105-50A	(7/9)	LTC H;PB/L;REC	44	H;CUE BIAS ON	(7/9)	105-50B
105-51A	(7/9)	H;LTC HPF ON	45	L;LTC EQ NORM	(7/9)	105-51B
105-52A	(7/9)	H;CUE REC MUTE	46	H;LTC LPF ON	(7/9)	105-52B
105-53A	(7/9)	H;CUE PB MUTE	47	CUE H;PB/L;EE	(7/9)	105-53B
105-54A	(7/9)	CUE H;PB/L;REC	48	H;DIGITAL/L;ANALOG	(7/9)	105-54B, 104-23B
105-55A	(7/9)	H;SLOW EQ ON	49	H;METAL/L;OXIDE	(7/9)	105-55B, 104-24B
105-43A, 147-23	(7/9)	L;POWER ON MUTE	50	H;AUDIO ATT ON	(7/9)	105-56B

CN142

From	Signal	Pin	CP-220 pin	To
	NC	1		
119-1A	CH-1 IN(X)	2	2	CP-220, 400-12
119-1B	CH-1 IN(Y)	3	9	CP-220, 400-11
119-2A/2B	CH-1 IN(G)	4	0	
119-3A	CH-2 IN(X)	5	2	CP-220, 400-9
119-3B	CH-2 IN(Y)	6	9	CP-220, 400-8
119-4A/4B	CH-2 IN(G)	7	0	
119-5A	CH-3 IN(X)	8	2	CP-220, 400-6
119-5B	CH-3 IN(Y)	9	9	CP-220, 400-5
119-6A/6B	CH-3 IN(G)	10	0	
119-7A	CH-4 IN(X)	11	2	CP-220, 400-3
119-7B	CH-4 IN(Y)	12	9	CP-220, 400-2
119-8A/8B	CH-4 IN(G)	13	0	

CN143

From	Signal	Pin	CP-220 pin	To
119-26A	CH-1 OUT(X)	1	9	CP-220, 401-1
119-26B	CH-1 OUT(Y)	2	2	CP-220, 401-2
119-27A/27B	CH-1 OUT(G)	3	8	
119-28A	CH-2 OUT(X)	4	9	CP-220, 401-4
119-28B	CH-2 OUT(Y)	5	2	CP-220, 401-5
119-29A/29B	CH-2 OUT(G)	6	8	
119-30A	CH-3 OUT(X)	7	9	CP-220, 401-7
119-30B	CH-3 OUT(Y)	8	2	CP-220, 401-8
119-31A/31B	CH-3 OUT(G)	9	8	
119-32A	CH-4 OUT(X)	10	9	CP-220, 401-10
119-32B	CH-4 OUT(Y)	11	2	CP-220, 401-11
119-33A/33B	CH-4 OUT(G)	12	8	

CN144

From	Signal	Pin	CP-220 pin	To
119-34A	MONITOR L OUT(X)	1	9	CP-220, 403-1
119-34B	MONITOR L OUT(Y)	2	2	CP-220, 403-2
119-35A/35B	MONITOR L OUT(G)	3	8	
119-36A	MONITOR R OUT(X)	4	9	CP-220, 403-4
119-36B	MONITOR R OUT(Y)	5	2	CP-220, 403-5
119-37A/37B	MONITOR R OUT(G)	6	8	
	NC	7		

CN145

From	Signal	Pin	VR-152 pin	To
120-28A	MONI L(X)	1	9	VR-152, 512-1
120-28B	MONI L(G)	2	8	
120-29B	MONI L VAR(X)	3	9	VR-152, 512-3
120-29A	MONI L VAR(G)	4	8	
120-30A	MONI R(X)	5	9	VR-152, 512-5
120-30B	MONI R(G)	6	8	
120-31B	MONI R VAR(X)	7	9	VR-152, 512-7
120-31A	MONI R VAR(G)	8	8	

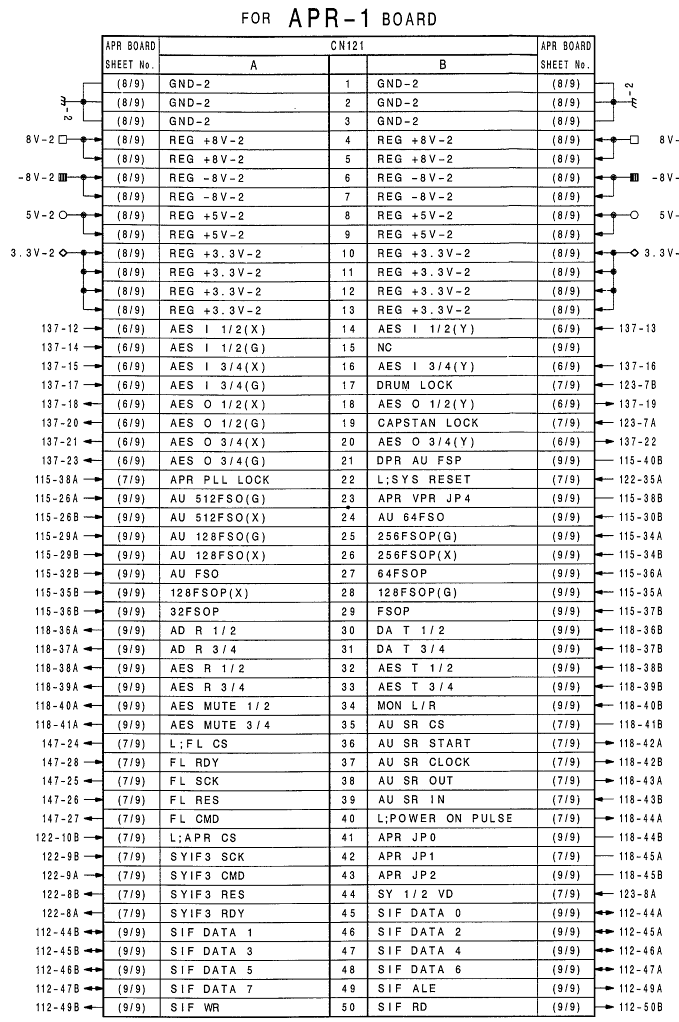

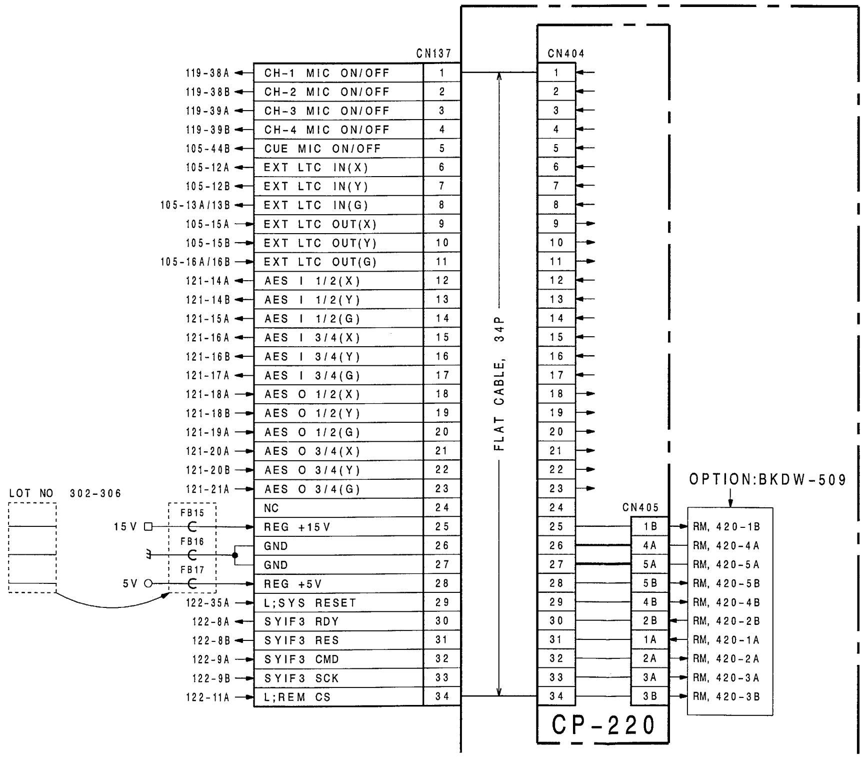

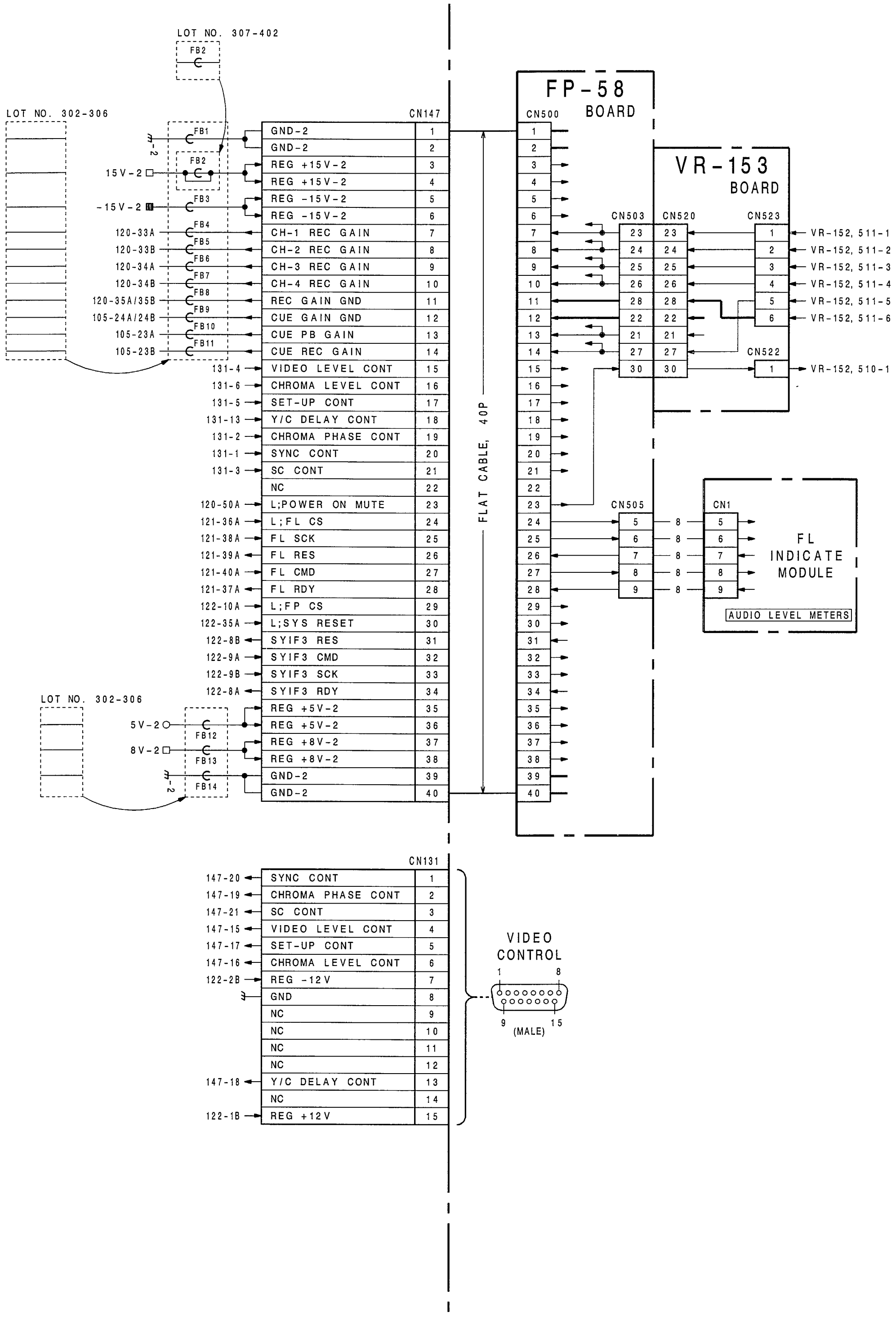

LOT NO.	BOARD NO.
302-306	1-648-560-11
307-402	1-648-560-12
403-	1-648-560-13

Mother board

MB-441 BOARD (5/6)

BOARD NO. 1-648-560-11, 12, 13
BOARD' S LOT NO. 302-
DVW-A500(J, UC) :MB-441A MCB
DVW-A500P(EK) :MB-441A MCB
DVW-A500P(UC) :MB-441A MCB
DVW-500 (J, UC) :MB-441 MCB
DVW-500P (EK) :MB-441 MCB
DVW-500P (UC) :MB-441 MCB

CN119
CN120
CN121
CN131
CN137
CN142
CN143
CN144
CN145
CN147

DVW-MB441-ALL-REC-S/M-04

 MB-441 (6/6)

MB-441 BOARD SHEET No.	REF. No.	CONNECTION	
(1/6)	CN100	DEC-65	BKDW-505/506
	CN101	TBC-23	DVW-A500/A500P ONLY (MB-441A MCB)
	CN102	TBC-24	
	CN103	DM-89	
	CN104	AP-28	
(2/6)	CN105	CUE-1AP/1A/1	
	CN106	EQ-45A/45	
	CN110	DIF-16	
	CN112		
(3/6)	CN113	VPR-1	
	CN114		
	CN115		
(4/6)	CN116	DPR-36	
	CN117		
	CN118		
(5/6)	CN119	APR-1	
	CN120		
	CN121		
(6/6)	CN122	SS-52A/52	
	CN123		
	CN124		
	CN130	RS232C CONNECTOR	
(5/6)	CN131	VIDEO CONTROL CONNECTOR	
(6/6)	CN132	REMOTE 1 IN(9P) CONNECTOR	
	CN133	REMOTE 1 OUT(9P) CONNECTOR	
	CN134	CONTROL PANEL CONNECTOR	
(3/6)	CN135	CP-218	(CN412)
	CN136		(CN413)
(5/6)	CN137	CP-220	(CN404)
(1/6)	CN138	CP-218	(CN414)
	CN139		(CN415)
(2/6)	CN140	CP-220	(CN402)
(5/6)	CN142		(CN400)
	CN143		(CN401)
	CN144		(CN403)
	CN145	VR-152	(CN512)
	CN147	FP-58	(CN500)
(6/6)	CN148	SWC-19	(CN148)
	CN149	HN-181	(CN201)
	CN150	FAN MOTOR(R)	
	CN151	SWITCHING REGULATOR	(CN201)
	CN152		(CN202)
	CN153		(CN206)
	CN154	HN-181	(CN205)
	CN155	NO CONNECTION	
	CN156	SWITCHING REGULATOR	(CN203)
(1/6)	CN160	CN161 OF MB-441	
	CN161	CN160 OF MB-441	

FOR SS-52A/52 BOARD

SS BOARD SHEET No.	CN122 A		CN122 B	SS BOARD SHEET No.
(5/12)	RM TX(+)	1	REG +12V	(2/12)
(5/12)	RM TX(-)	2	REG -12V	(2/12)
(5/12)	RM RX(+)	3	METRIC ADV BD	(1/12)
(5/12)	RM RX(-)	4	METRIC ADV AC	(1/12)
(5/12)	PRIORITY OUT	5	METRIC CNF BD	(1/12)
(5/12)	PRIORITY IN	6	METRIC CNF AC	(1/12)
(3/12)	MODE TEST	7	WNOVR OFF	(3/12)
(3/12)	SYIF3 RDY	8	SYIF3 RES	(3/12)
(3/12)	SYIF3 CMD	9	SYIF3 SCK	(3/12)
(3/12)	L;FP CS	10	L;APR CS	(3/12)
(3/12)	L;REM CS	11	L;HM CS	(3/12)
(3/12)	SYIF2 RDY	12	SYIF2 RES	(3/12)
(3/12)	SYIF2 CMD	13	SYIF2 SCK	(3/12)
(3/12)	L;VPR CS	14	L;TBC CS	(3/12)
(1/12)	PP CS	15	L;DM CS	(3/12)
(1/12)	SCS 0	16	SCS 1	(1/12)
(1/12)	SYIF1 CMD	17	SYIF1 SCK	(1/12)
(1/12)	EQ STB1	18	EQ STB2	(1/12)
(1/12)	EQ STB3	19	VIDEO INDEX RDY	(3/12)
(3/12)	PAD 0	20	PAD 1	(3/12)
(3/12)	PAD 2	21	PAD 3	(3/12)
(3/12)	PAD 4	22	PAD 5	(3/12)
(3/12)	PAD 6	23	PAD 7	(3/12)
(3/12)	PS 0	24	PS 1	(3/12)
(3/12)	PSTB	25	KEY RX(+)	(5/12)
(3/12)	PCS 0	26	KEY RX(-)	(5/12)
(1/12)	NC	27	KEY TX(+)	(5/12)
(1/12)	NC	28	KEY TX(-)	(5/12)
(2/12)	TX(R)	29	RX(R)	(2/12)
(2/12)	DTR(R)	30	DCD(R)	(2/12)
(2/12)	RTS(R)	31	CTS(R)	(2/12)
(2/12)	DSR(R)	32	SEG SW	(3/12)
(8/12)	DIF SS CSIT/COMP	33	DIF SS 4FSC(G)	(1/12)
(1/12)	DIF SS 4FSC(X)	34	L;SYS RESET 3.3V	(3/12)
(1/12)	L;SYS RESET	35	ERROR FLAG	(7/12)
(3/12)	SVCNT ERR	36	L;B-CAM SEL	(3/12)
(3/12)	PRTY ERR	37	L;SYSTEM EE1	(3/12)
(3/12)	PRTY CLR	38	L;SYSTEM EE2	(3/12)
(3/12)	PA3	39	H;REC LOCK OUT	(3/12)
(3/12)	MODE PR	40	H;REV/L;FWD	(3/12)
(3/12)	L;DIF CHA CS	41	DIF CHA CK	(3/12)
(3/12)	DIF CHA DT	42	S CHARA SIG(X)	(4/12)
(4/12)	S CHARA FRAME	43	S CHARA SIG(G)	(4/12)
(6/12)	REG +15V-2	44	REG +15V-2	(6/12)
(3/12)	REG +15V-2	45	REG +15V-2	(3/12)
(6/12)	REG -15V-2	46	REG -15V-2	(6/12)
(3/12)	REG -15V-2	47	REG -15V-2	(3/12)
(6/12)	GND-2	48	GND-2	(6/12)
(6/12)	GND-2	49	GND-2	(6/12)
(6/12)	GND-2	50	GND-2	(6/12)

FOR SS-52A/52 BOARD

SS BOARD SHEET No.	CN123 A		CN123 B	SS BOARD SHEET No.
(3/12)	SS VD	1	SS HD	(3/12)
(4/12)	CHARA FRAME	2	CHARA SIG(X)	(4/12)
(3/12)	SS CK 13.5(X)	3	CHARA SIG(G)	(4/12)
(3/12)	SS CK 13.5(G)	4	L;SS RESET	(1/12)
(4/12)	PB LTC	5	LTC SOURCE	(4/12)
(4/12)	REC LTC	6	LTC OUT	(4/12)
(8/12)	CAPSTAN LOCK	7	DRUM LOCK	(8/12)
(7/12)	SY 1/2 VD	8	L;DT LOCK	(9/12)
(10/12)	Y WZ	9	C WZ	(10/12)
(7/12)	Y PB SYNC	10	SERVO V	(7/12)
(9/12)	DT V	11	PB O/E	(10/12)
(8/12)	L;REV/H;FWD	12	L;NOISELESS PB	(8/12)
(10/12)	L;DT	13	JUMP ID1	(9/12)
(8/12)	PB FP1	14	PB FP2	(8/12)
(5/12)	DM TBC SS JP0	15	DM TBC SS JP1	(5/12)
(7/12)	ADV Y SW PLS	16	ADV C SW PLS	(7/12)
(7/12)	L;Y DO PLS	17	L;C DO PLS	(7/12)
(8/12)	H;FAST SEARCH	18	L;SLOW BID	(8/12)
(10/12)	L;RF Y VBLK	19	L;RF C VBLK	(10/12)
(6/12)	DM SS JP3	20	DM SS JP2	(6/12)
(9/12)	Y RF ENVELOPE(X)	21	Y RF ENVELOPE(G)	(9/12)
(9/12)	ADV AC ENV	22	ADV BD ENV	(9/12)
(8/12)	SAT CK(G)	23	SAT CK(X)	(8/12)
(8/12)	GND-2	24	GND-2	(8/12)
(8/12)	GND-2	25	PB SAT REC AC	(8/12)
(8/12)	GND-2	26	EQ GND1	(8/12)
(8/12)	GND-2	27	PB SAT REC BD	(8/12)
(8/12)	GND-2	28	EQ GND2	(8/12)
(8/12)	GND-2	29	PB SAT ADV AC	(8/12)
(8/12)	EQ SS JP1	30	EQ GND3	(8/12)
(8/12)	GND-2	31	PB SAT ADV BD	(8/12)
(7/12)	REC SAT AC	32	EQ GND4	(8/12)
(8/12)	GND-2	33	L;FAST SEARCH	(8/12)
(7/12)	L;SAT AC EN	34	EQ SS JP2	(8/12)
(7/12)	L;FE A EN	35	L;FE B EN	(7/12)
(7/12)	CNF AC FREQ	36	CNF BD FREQ	(7/12)
(7/12)	ADV AC FREQ	37	ADV BD FREQ	(7/12)
(7/12)	SS CF	38	VPR SS JP1	(5/12)
(7/12)	SEG 0	39	SEG 1	(7/12)
(7/12)	SEG 2(FIELD)	40	DT 2F	(7/12)
(7/12)	DT SEG 0	41	DT SEG 1	(7/12)
(7/12)	SYNC PLS	42	PP SV-REF	(7/12)
(8/12)	H;SV LOCK	43	DIRECTION	(7/12)
(7/12)	PB 2F	44	PB 4F	(7/12)
(7/12)	PB 8F	45	CAP 8FG	(7/12)
(7/12)	5F INERTIA	46	DT JUMP	(7/12)
(7/12)	REC AC SEL	47	REC BD SEL	(7/12)
(7/12)	CNF AC SEL	48	CNF BD SEL	(7/12)
(7/12)	ADV AC SEL	49	ADV BD SEL	(7/12)
(7/12)	L;B-CAM 3.3V	50	START PLS	(8/12)

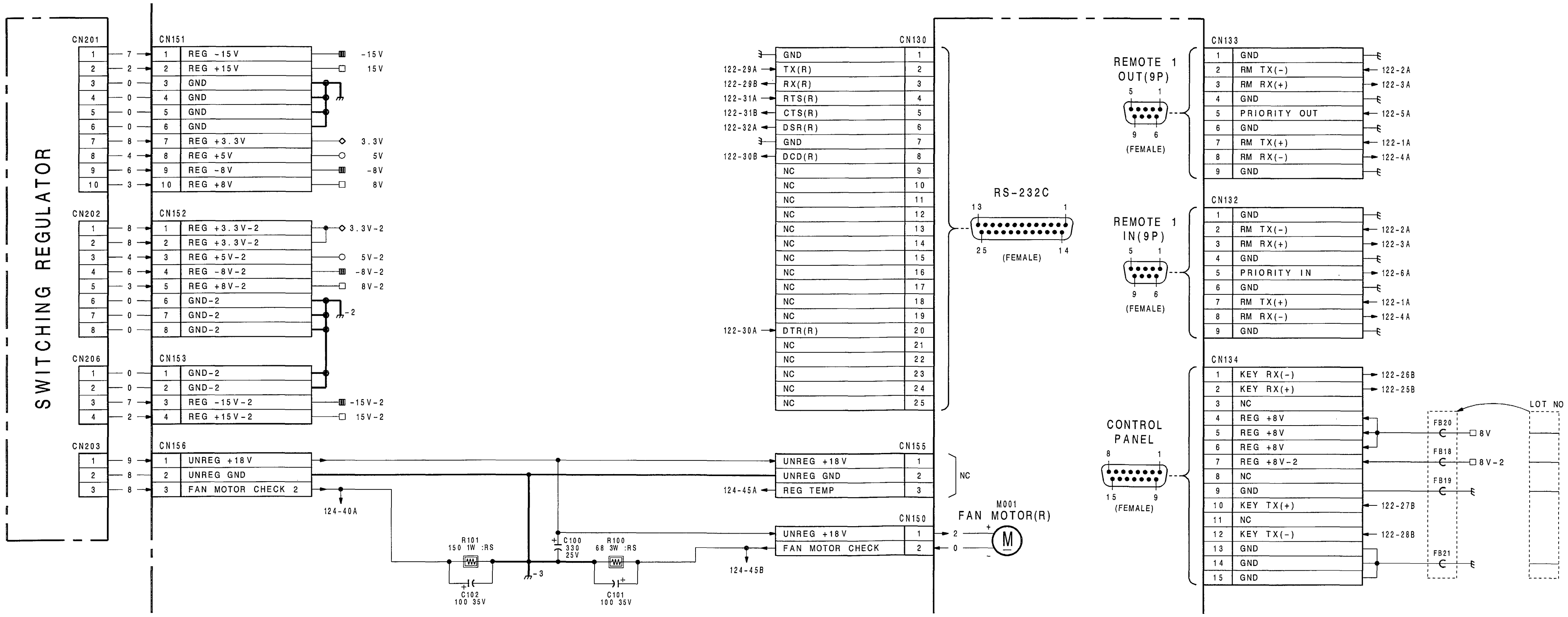

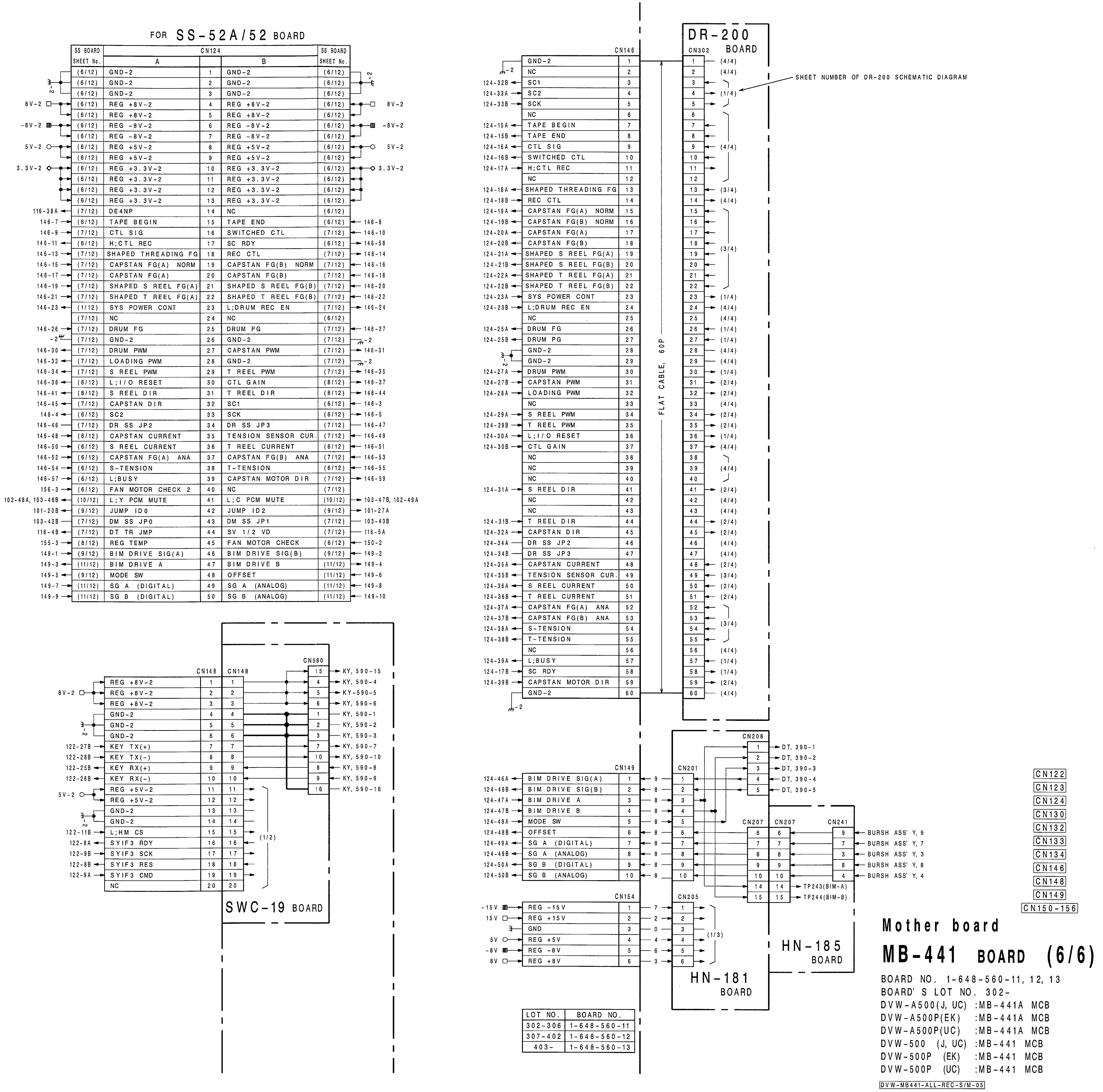
FOR SS-52A/52 BOARD
CN124
DR-200 BOARD
CN302
CN146
SHEET NUMBER OF DR-200 SCHEMATIC DIAGRAM
FLAT CABLE, 60P
SWC-19 BOARD
CN148
CN580
CN149
CN154
CN201
CN208
CN207
CN241
CN205
HN-181 BOARD
HN-185 BOARD
LOT NO. BOARD NO.
302-306 1-648-560-11
307-402 1-648-560-12
403- 1-648-560-13
CN122
CN123
CN124
CN130
CN132
CN133
CN134
CN146
CN148
CN149
CN150-156
Mother board
MB-441 BOARD (6/6)
BOARD NO. 1-648-560-11, 12, 13
BOARD' S LOT NO. 302-
DVW-A500(J, UC) :MB-441A MCB
DVW-A500P(EK) :MB-441A MCB
DVW-A500P(UC) :MB-441A MCB
DVW-500 (J, UC) :MB-441 MCB
DVW-500P (EK) :MB-441 MCB
DVW-500P (UC) :MB-441 MCB
DVW-MB441-ALL-REC-S/M-05

1
2
3
4
5

Section 2
Schematic Diagram for Optional Boards

Circuit Function

Model name	Board name	Circuit Function	Page
BKDW-505	DEC-65	Analog composite video decoder (Composite-component conversion, A/D conversion)	2-8
BKDW-507	PP-45	Audio program play	2-4
BKDW-509	RM-130	Parallel (50P) interface	2-3
BKDW-514	KY-231	Panel function control	2-12
	DP-176	Time counter display	
	PTC-69	Search dial sensor, Dial solenoid connection	
	CP-266	Panel control CPU, EL control, PIO, Memory card I/F	2-14
	PTC-69	Search dial sensor, Dial solenoid connection	2-16
BKDW-515	KY-330	Editing operation/tape transport control switches, Memory card connector	2-18
	SW-749	Function control swithes	2-19

Note

The ⚠-marked components are critical to safety.
Replace only with same components as specified.

注意

⚠印の部品は安全性を維持するために重要な部品です。
従って交換するときは必ず指定の部品を使ってください。

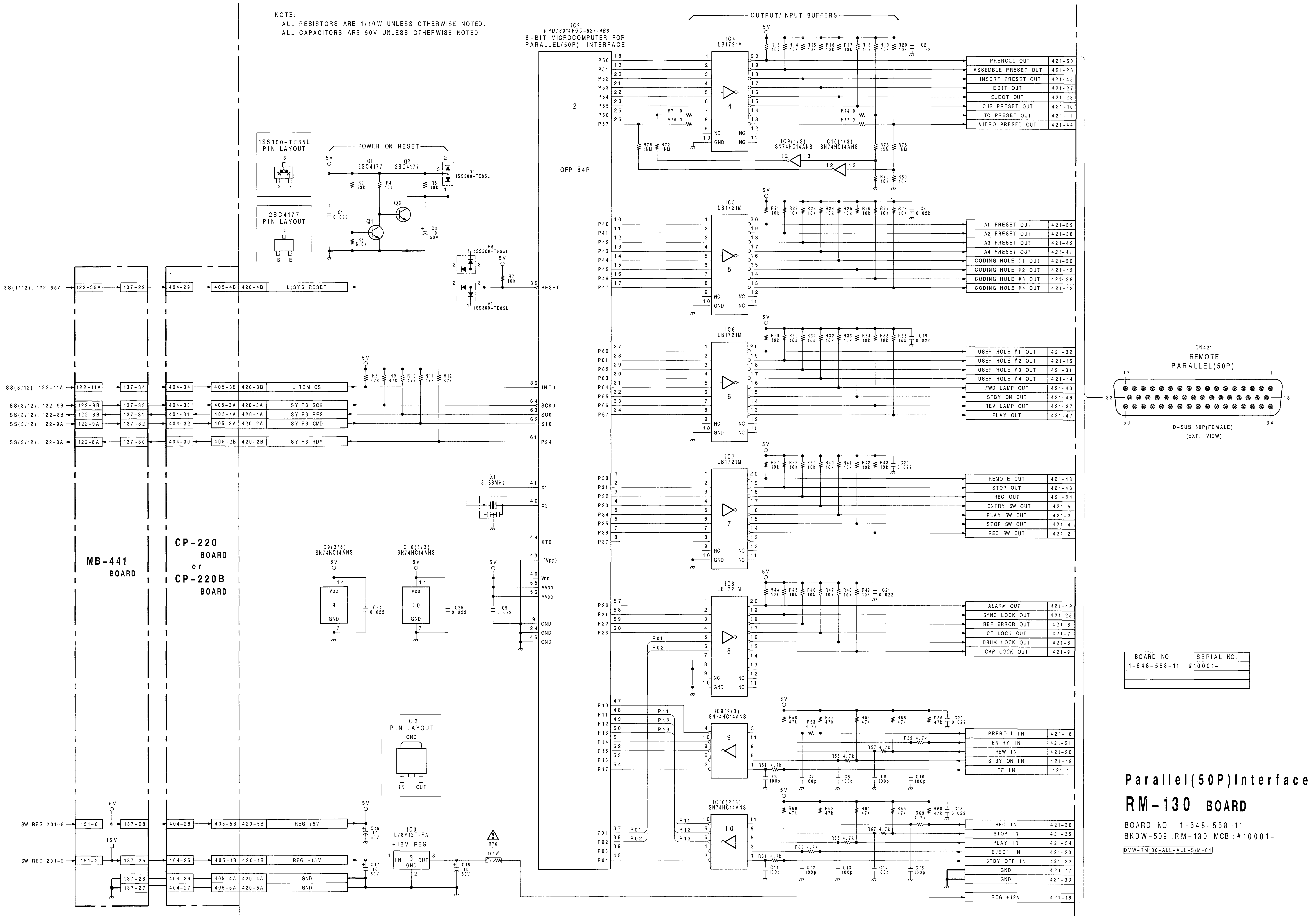

NOTE:
ALL RESISTORS ARE 1/10W UNLESS OTHERWISE NOTED.
ALL CAPACITORS ARE 50V UNLESS OTHERWISE NOTED.
IC2
μPD78014FGC-637-AB8
8-BIT MICROCOMPUTER FOR
PARALLEL(50P) INTERFACE
QFP 64P
OUTPUT/INPUT BUFFERS
POWER ON RESET
1SS300-TE85L PIN LAYOUT
2SC4177 PIN LAYOUT
IC3 PIN LAYOUT
MB-441 BOARD
CP-220 BOARD or CP-220B BOARD
L;SYS RESET
L;REM CS
SYIF3 SCK
SYIF3 RES
SYIF3 CMD
SYIF3 RDY
REG +5V
REG +15V
GND
IC3
L78M12T-FA
+12V REG
X1
8.38MHz
PREROLL OUT
ASSEMBLE PRESET OUT
INSERT PRESET OUT
EDIT OUT
EJECT OUT
CUE PRESET OUT
TC PRESET OUT
VIDEO PRESET OUT
A1 PRESET OUT
A2 PRESET OUT
A3 PRESET OUT
A4 PRESET OUT
CODING HOLE #1 OUT
CODING HOLE #2 OUT
CODING HOLE #3 OUT
CODING HOLE #4 OUT
USER HOLE #1 OUT
USER HOLE #2 OUT
USER HOLE #3 OUT
USER HOLE #4 OUT
FWD LAMP OUT
STBY ON OUT
REV LAMP OUT
PLAY OUT
REMOTE OUT
STOP OUT
REC OUT
ENTRY SW OUT
PLAY SW OUT
STOP SW OUT
REC SW OUT
ALARM OUT
SYNC LOCK OUT
REF ERROR OUT
CF LOCK OUT
DRUM LOCK OUT
CAP LOCK OUT
PREROLL IN
ENTRY IN
REW IN
STBY ON IN
FF IN
REC IN
STOP IN
PLAY IN
EJECT IN
STBY OFF IN
REG +12V
CN421
REMOTE
PARALLEL(50P)
D-SUB 50P(FEMALE)
(EXT. VIEW)
BOARD NO. | SERIAL NO.
1-648-558-11 | #10001-
Parallel(50P)Interface
RM-130 BOARD
BOARD NO. 1-648-558-11
BKDW-509 :RM-130 MCB :#10001-
DVW-RM130-ALL-ALL-S/M-04

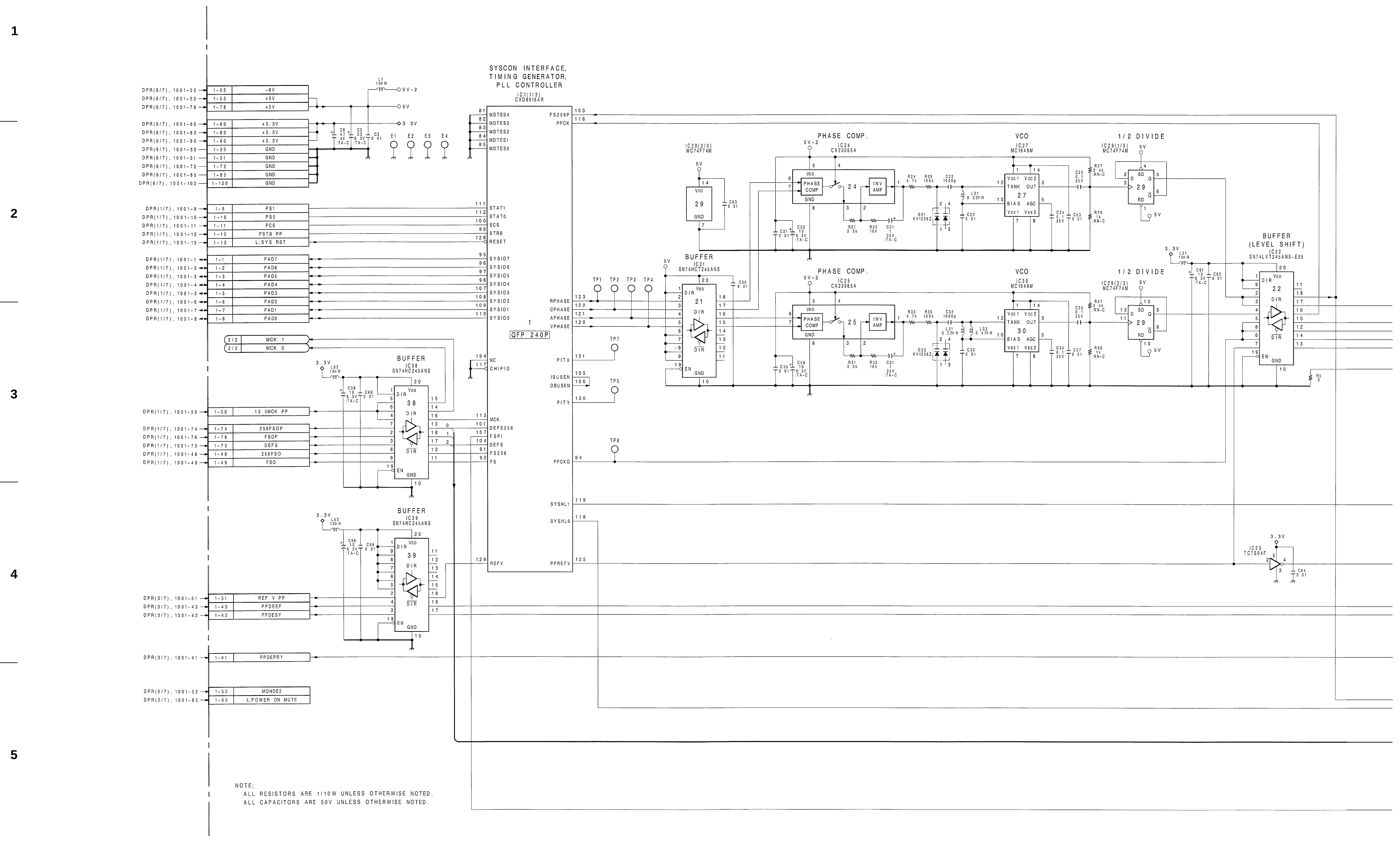
SYSCON INTERFACE,
TIMING GENERATOR,
PLL CONTROLLER
IC1(1/3)
CXD8916AR
QFP 240P
PHASE COMP.
IC24
CX23065A
VCO
IC27
MC1648M
1/2 DIVIDE
IC29(1/3)
MC74F74M
IC29(3/3)
MC74F74M
BUFFER
IC21
SN74HCT245ANS
PHASE COMP.
IC25
CX23065A
VCO
IC30
MC1648M
1/2 DIVIDE
IC29(2/3)
MC74F74M
BUFFER
(LEVEL SHIFT)
IC22
SN74LVT245ANS-E05
BUFFER
IC38
SN74HC245ANS
BUFFER
IC39
SN74HC245ANS
IC23
TC7S04F
NOTE;
ALL RESISTORS ARE 1/10W UNLESS OTHERWISE NOTED.
ALL CAPACITORS ARE 50V UNLESS OTHERWISE NOTED.

A | B | C | D | E | F | G | H

http://getMANUAL.com

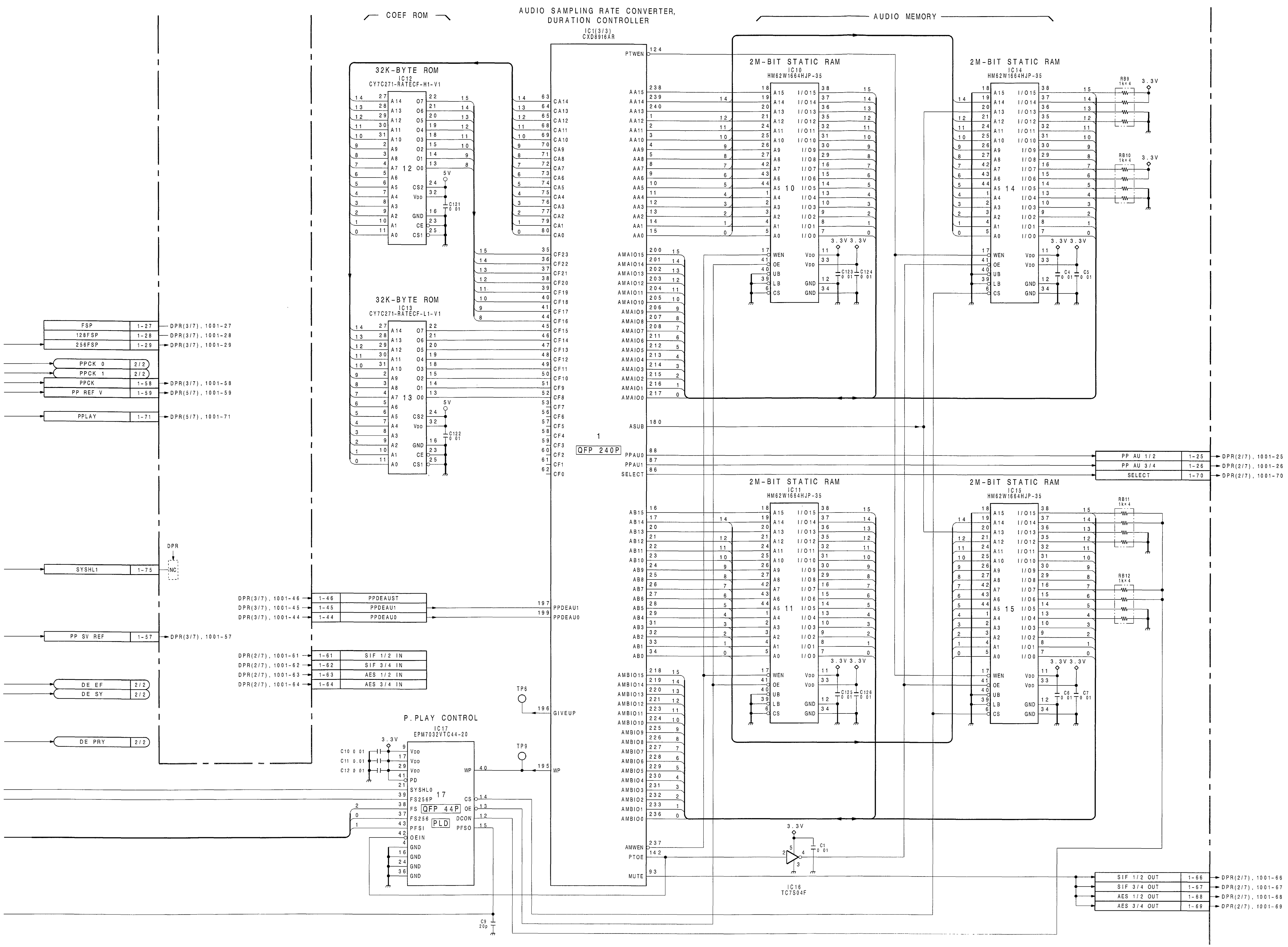

Clock Generator, System Control Interface, Audio Memory Control

PP-45 BOARD (1/2)

BOARD NO. 1-652-642-13
BKDW-507 :PP-45 MCB :#10001-
DVW-PP45-ALL-ALL-S/M-02

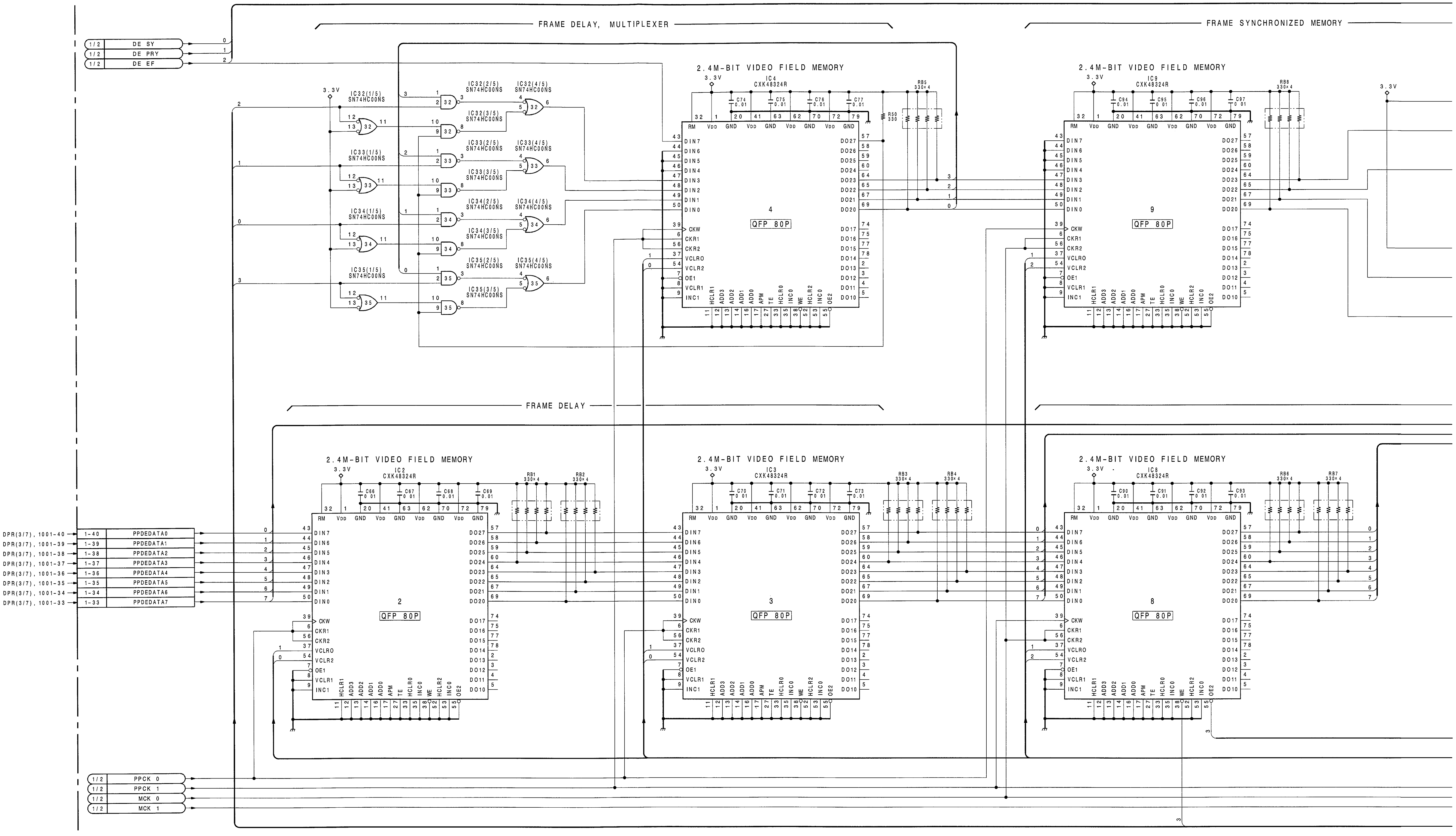

NOTE;
ALL RESISTERS ARE 1/10W UNLESS OTHERWISE NOTED.
ALL CAPACITORS ARE 50V UNLESS OTHERWISE NOTED.

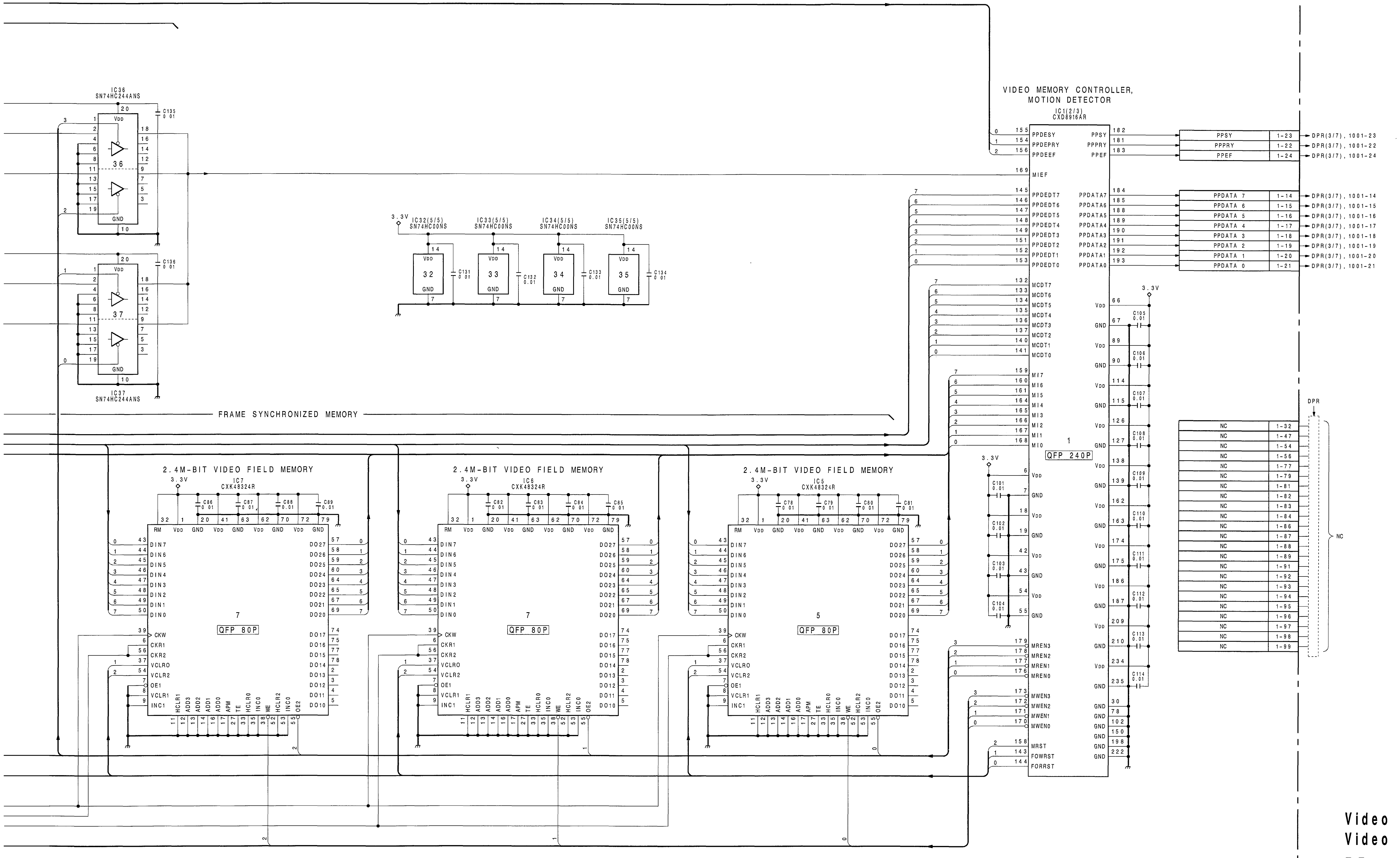

Video Data Frame Delay, Video Memory Control

PP-45 BOARD (2/2)

BOARD NO. 1-652-642-13
BKDW-507 :PP-45 MCB :#10001-
DVW-PP45-ALL-ALL-S/M-02

1
2
3
4
5

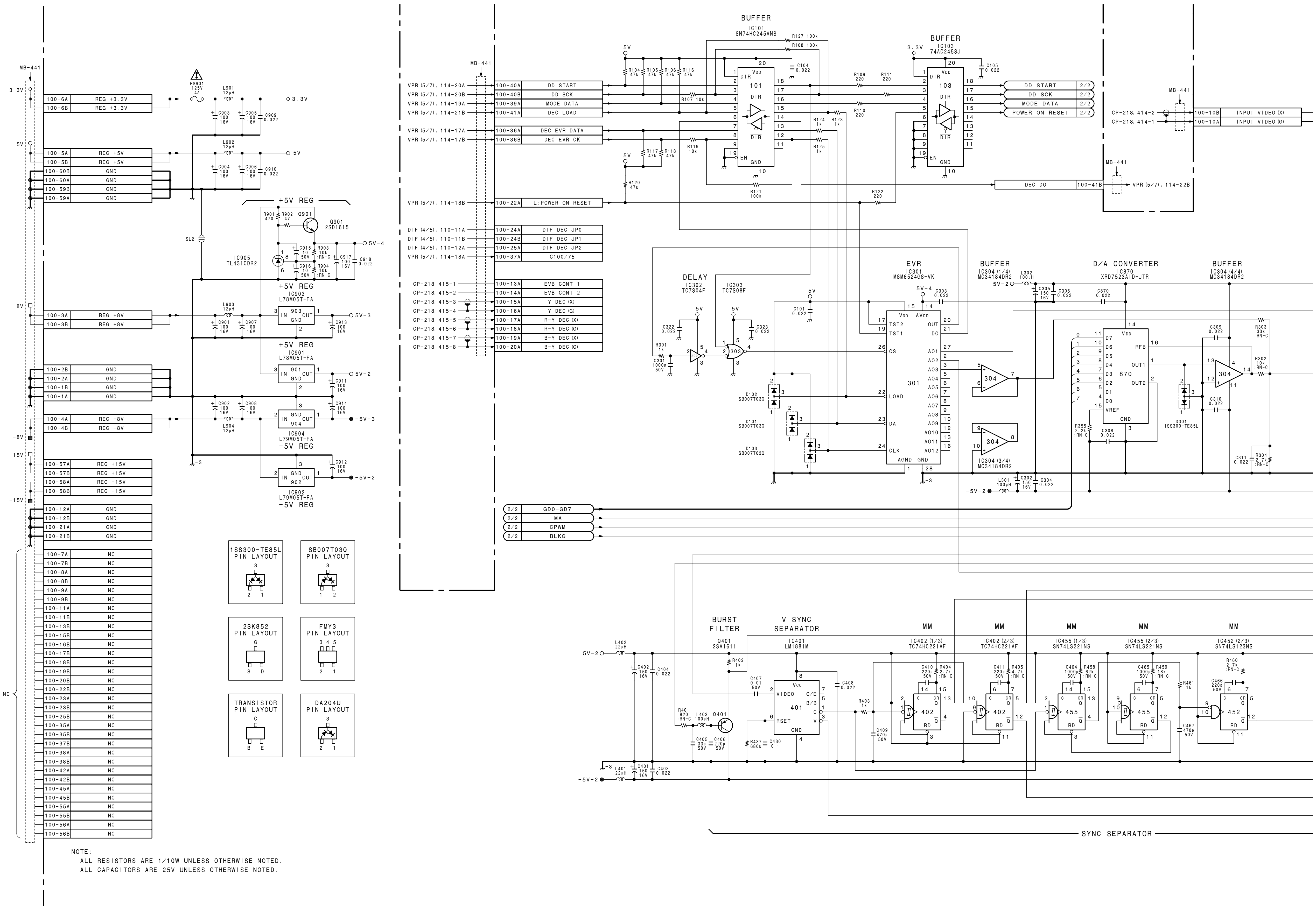

A B C D E F G H

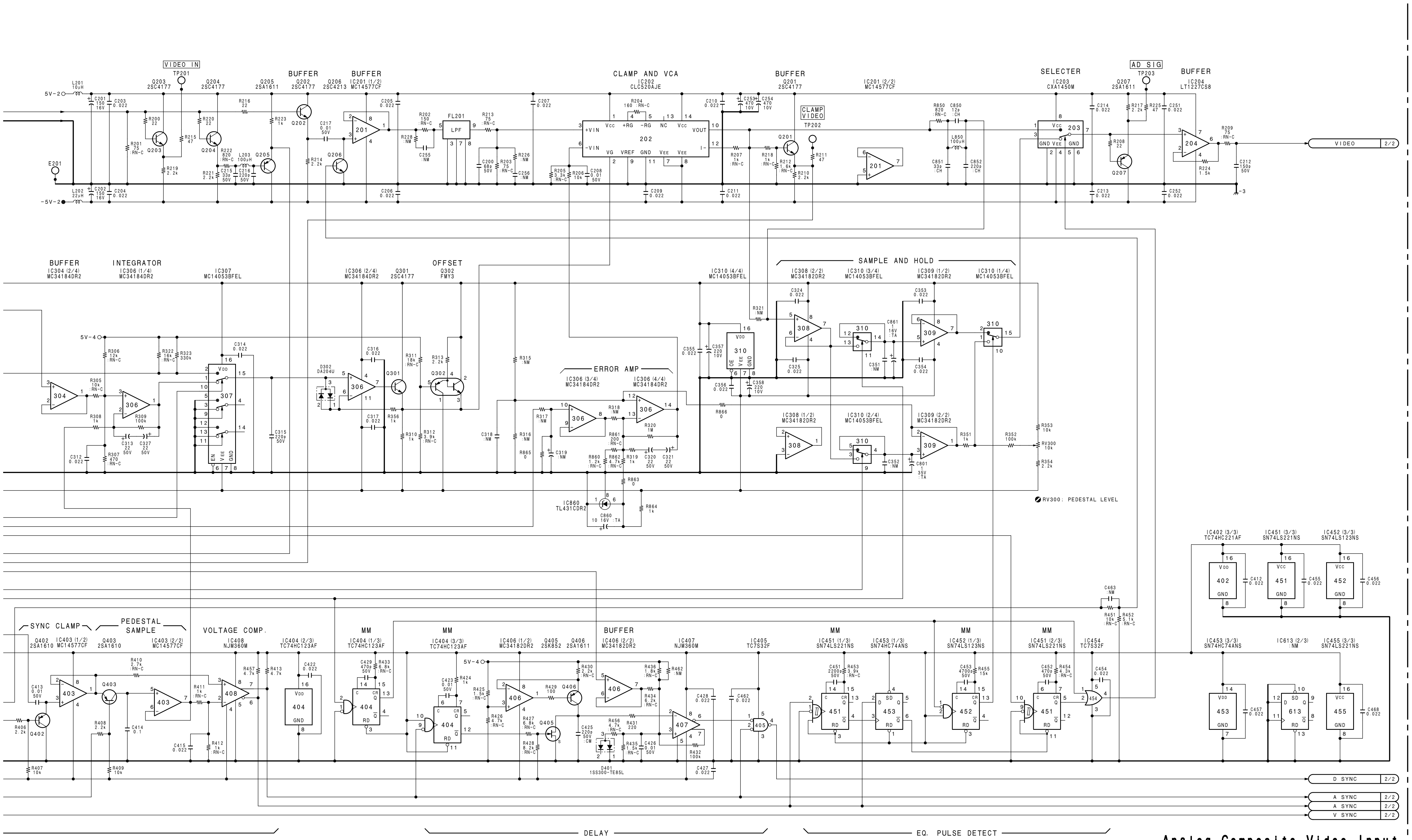

BORAD NO.	SERIAL NO.
1-648-545-14	#14131-#18180
1-648-545-15	#18181-

Analog Composite Video Input (EVR, AGC, SYNC Separator)

DEC-65 BOARD (1/2)

BOARD NO. 1-648-545-14,15
BKDW-505(UCJ) :DEC-65 MCB :#14131-
DVW-DEC65-NTSC-REC-S/M-05-D

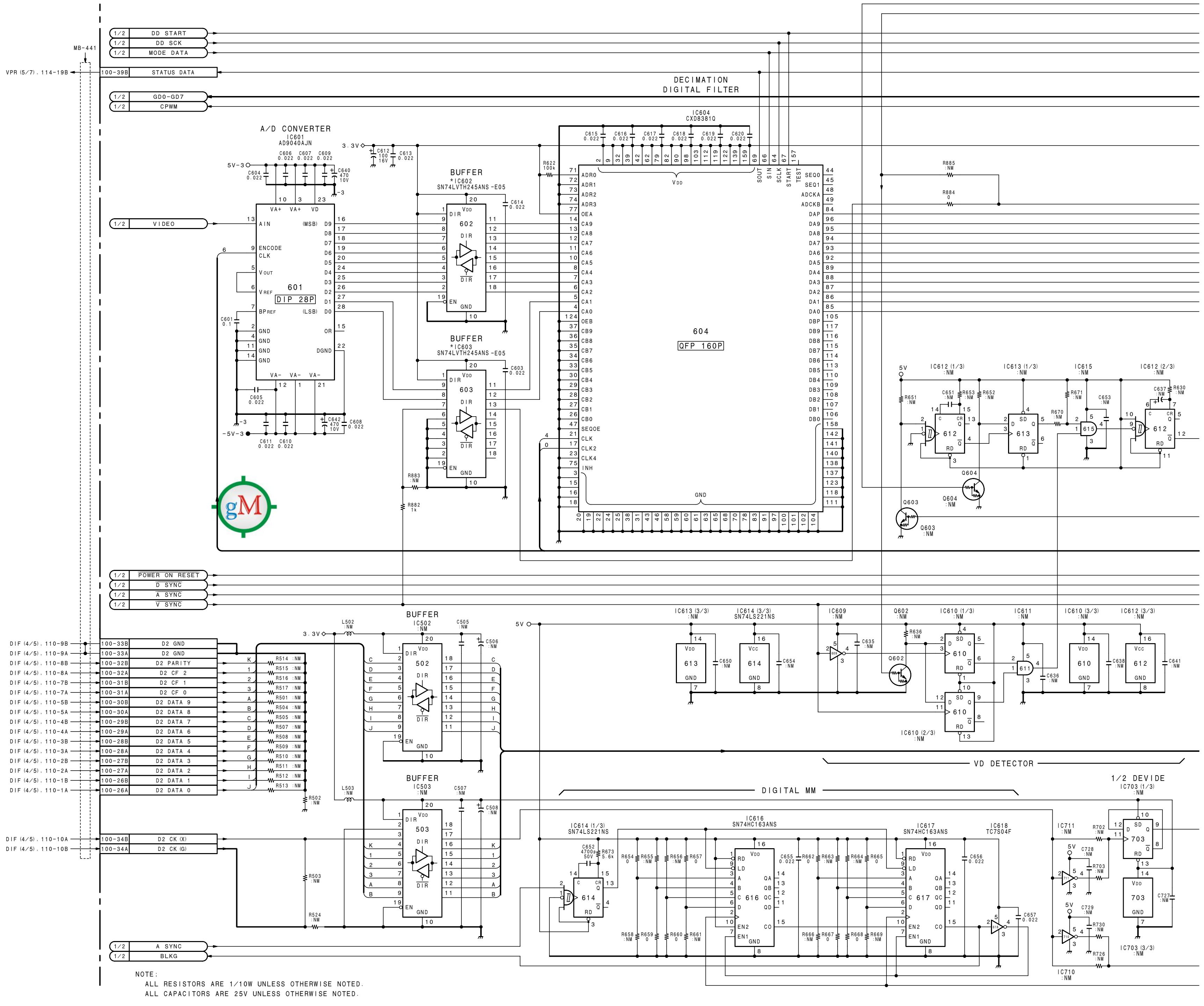
A/D CONVERTER
IC601
AD9040AJN
BUFFER
*IC602
SN74LVTH245ANS-E05
BUFFER
*IC603
SN74LVTH245ANS-E05
DECIMATION
DIGITAL FILTER
IC604
CXD8381Q
QFP 160P
DIP 28P
BUFFER
IC502
BUFFER
IC503
VD DETECTOR
DIGITAL MM
1/2 DEVIDE
IC616
SN74HC163ANS
IC617
SN74HC163ANS
IC618
TC7S04F
DD START
DD SCK
MODE DATA
STATUS DATA
GD0-GD7
CPWM
VIDEO
POWER ON RESET
D SYNC
A SYNC
V SYNC
D2 GND
D2 PARITY
D2 CK (X)
D2 CK (G)
BLKG
NOTE:
ALL RESISTORS ARE 1/10W UNLESS OTHERWISE NOTED.
ALL CAPACITORS ARE 25V UNLESS OTHERWISE NOTED.

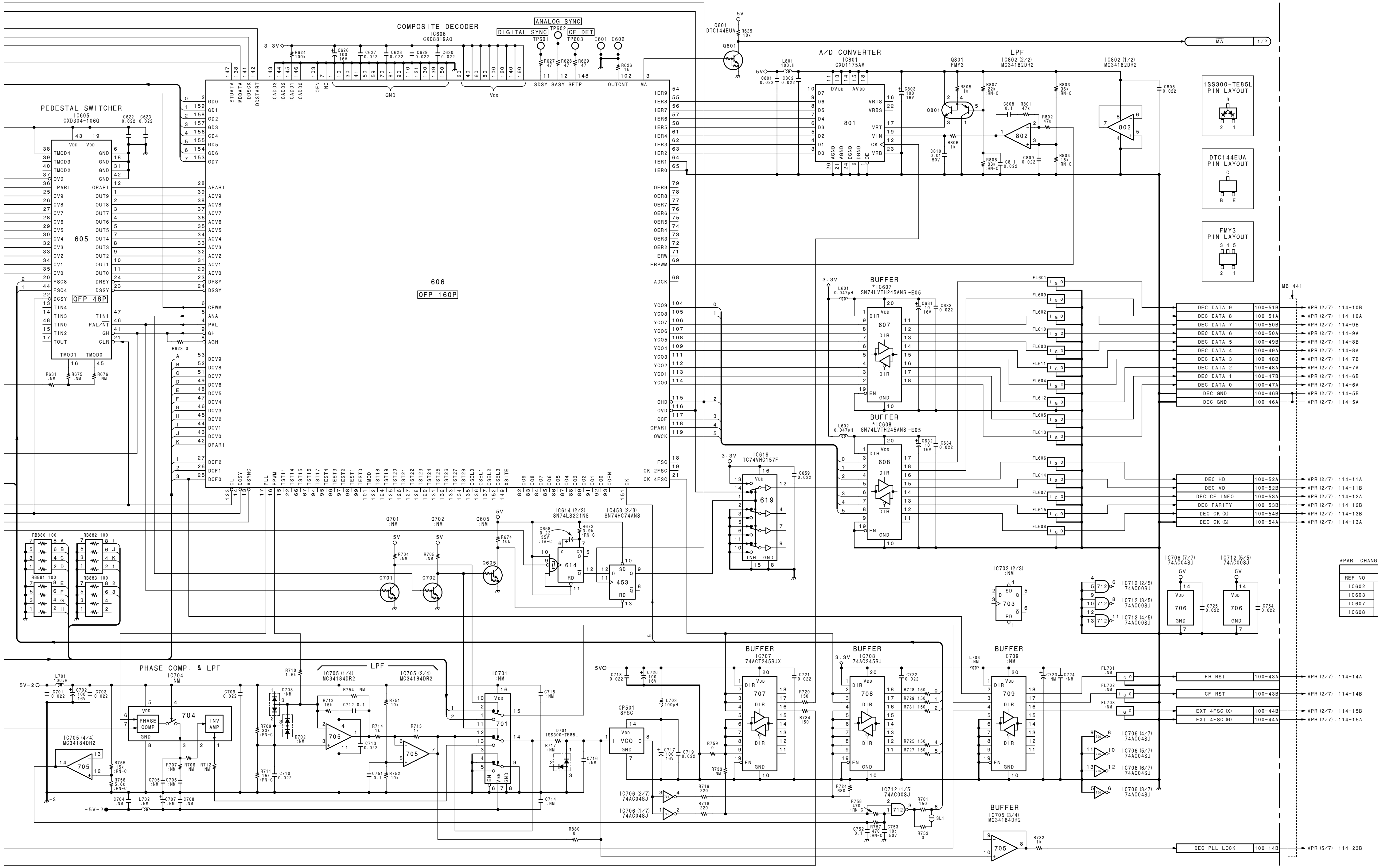

*PART CHANGE INFORMATION

PART CHANGE INFORMATION			CHANGE	REPAIR PART	SIMULATANEOUSIY
REF NO.	OLD	NEW	LOT NO.	FOR OLD PART	CHANGE PART
IC602 IC603 IC607 IC608	SN74LVT245ANS-E05 →	SN74LVTH245ANS-E05	905	SN74LVTH245ANS-E05	IC602 IC603 IC607 IC608

BORAD NO.	SERIAL NO.
1-648-545-14	#14131-#18180
1-648-545-15	#18181-

Analog Composite Video Input (EVR, AGC, SYNC Separator)

DEC-65 BOARD (2/2)

BOARD NO. 1-648-545-14, 15

BKDW-505 (UCJ) :DEC-65 MCB :#14131-

DVW-DEC65-NTSC-REC-S/M-05-D

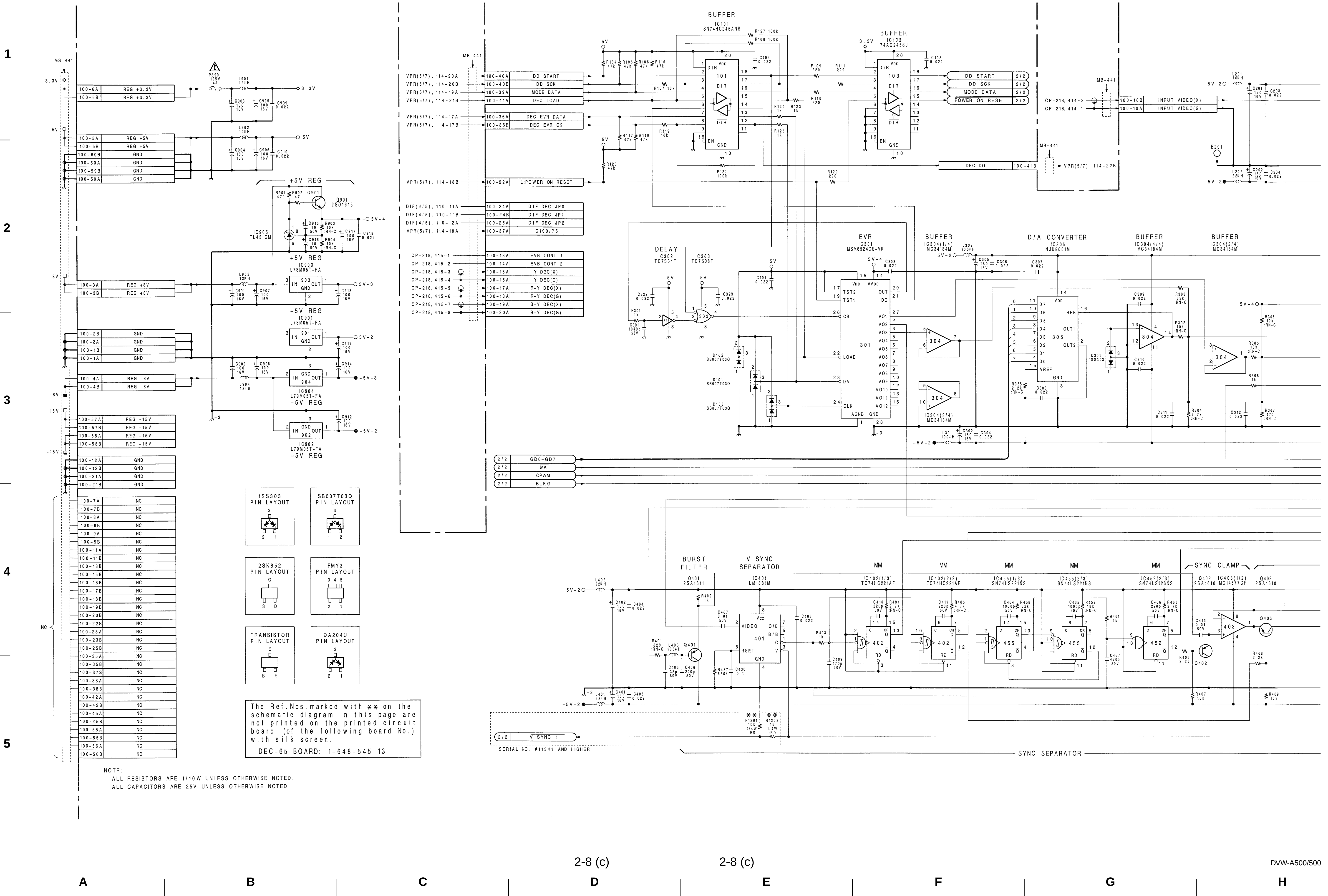
1
2
3
4
5
MB-441
REG +3.3V
REG +5V
GND
REG +8V
REG -8V
REG +15V
REG -15V
NC
PS901
+5V REG
Q901 2SD1615
IC905 TL431CM
IC903 L78M05T-FA
+5V REG
IC901 L78M05T-FA
IC904 L79M05T-FA
-5V REG
IC902 L79M05T-FA
-5V REG
1SS303 PIN LAYOUT
SB007T03Q PIN LAYOUT
2SK852 PIN LAYOUT
FMY3 PIN LAYOUT
TRANSISTOR PIN LAYOUT
DA204U PIN LAYOUT
The Ref.Nos. marked with ** on the schematic diagram in this page are not printed on the printed circuit board (of the following board No.) with silk screen.
DEC-65 BOARD: 1-648-545-13
NOTE;
ALL RESISTORS ARE 1/10W UNLESS OTHERWISE NOTED.
ALL CAPACITORS ARE 25V UNLESS OTHERWISE NOTED.
DD START
DD SCK
MODE DATA
DEC LOAD
DEC EVR DATA
DEC EVR CK
L;POWER ON RESET
DIF DEC JP0
DIF DEC JP1
DIF DEC JP2
C100/75
EVB CONT 1
EVB CONT 2
Y DEC(X)
Y DEC(G)
R-Y DEC(X)
R-Y DEC(G)
B-Y DEC(X)
B-Y DEC(G)
BUFFER
IC101 SN74HC245ANS
BUFFER
IC103 74AC245SJ
POWER ON RESET
INPUT VIDEO(X)
INPUT VIDEO(G)
DEC DO
DELAY
IC302 TC7S04F
IC303 TC7S08F
EVR
IC301 MSM6524GS-VK
BUFFER
IC304(1/4) MC34184M
D/A CONVERTER
IC305 NJU8001M
BUFFER
IC304(4/4) MC34184M
BUFFER
IC304(2/4) MC34184M
IC304(3/4) MC34184M
D102 SB007T03Q
D101 SB007T03Q
D103 SB007T03Q
D301 1SS303
GD0-GD7
MA
CPWM
BLKG
BURST FILTER
Q401 2SA1611
V SYNC SEPARATOR
IC401 LM1881M
MM
IC402(1/3) TC74HC221AF
MM
IC402(2/3) TC74HC221AF
MM
IC455(1/3) SN74LS221NS
MM
IC455(2/3) SN74LS221NS
MM
IC452(2/3) SN74LS123NS
SYNC CLAMP
Q402 2SA1610
IC403(1/2) MC14577CF
Q403 2SA1610
V SYNC 1
SERIAL NO. #11341 AND HIGHER
SYNC SEPARATOR
A
B
C
D
E
F
G
H

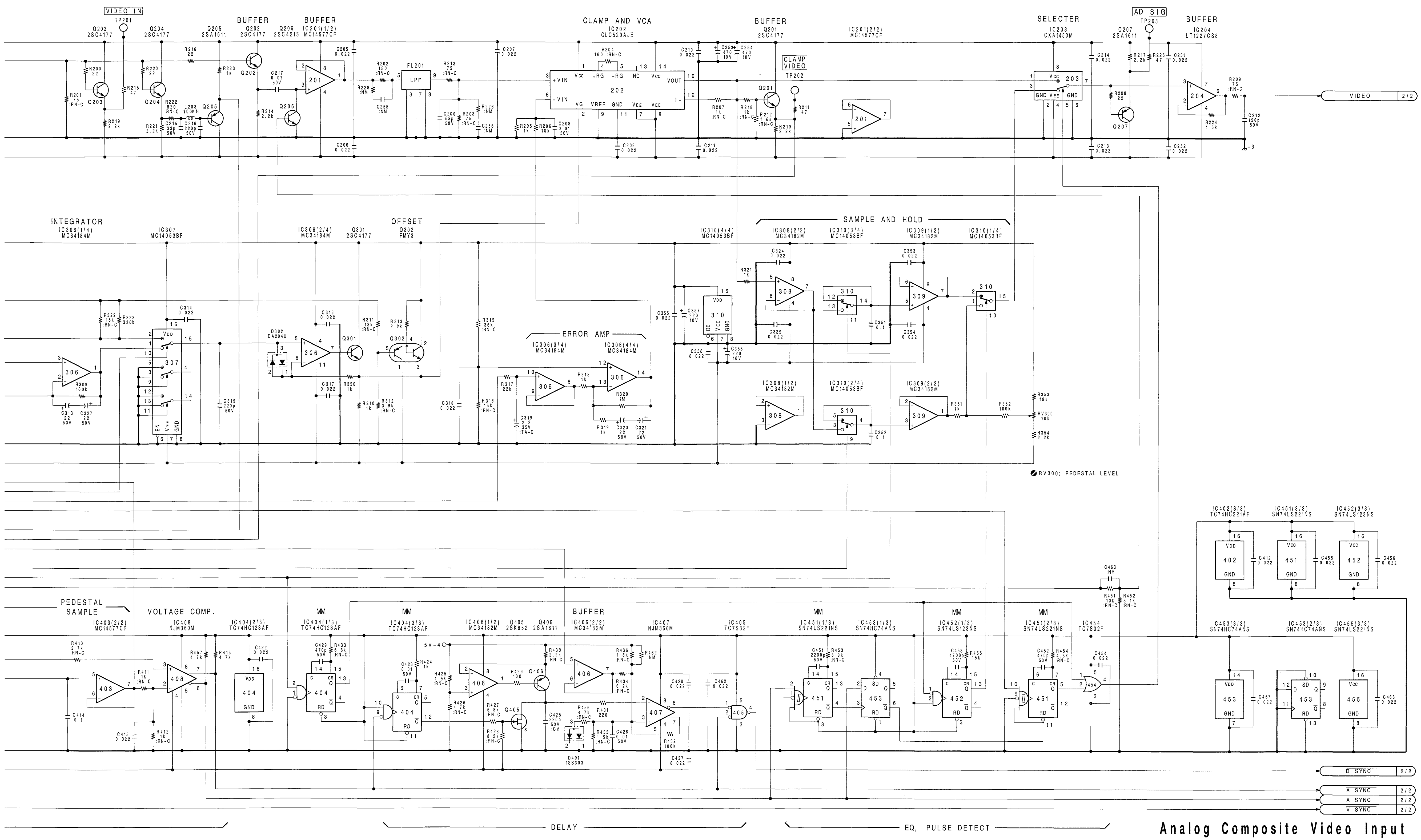

1
2
3
4
5

Analog Composite Video Input (EVR, AGC, SYNC Separator)

DEC-65 BOARD (1/2)

BOARD NO. 1-648-545-13
BKDW-505(UCJ) :DEC-65 MCB :#11305-14130

DVW-DEC65-NTSC-REC-S/M-05-C

I | J | K | L | M | N | O | P

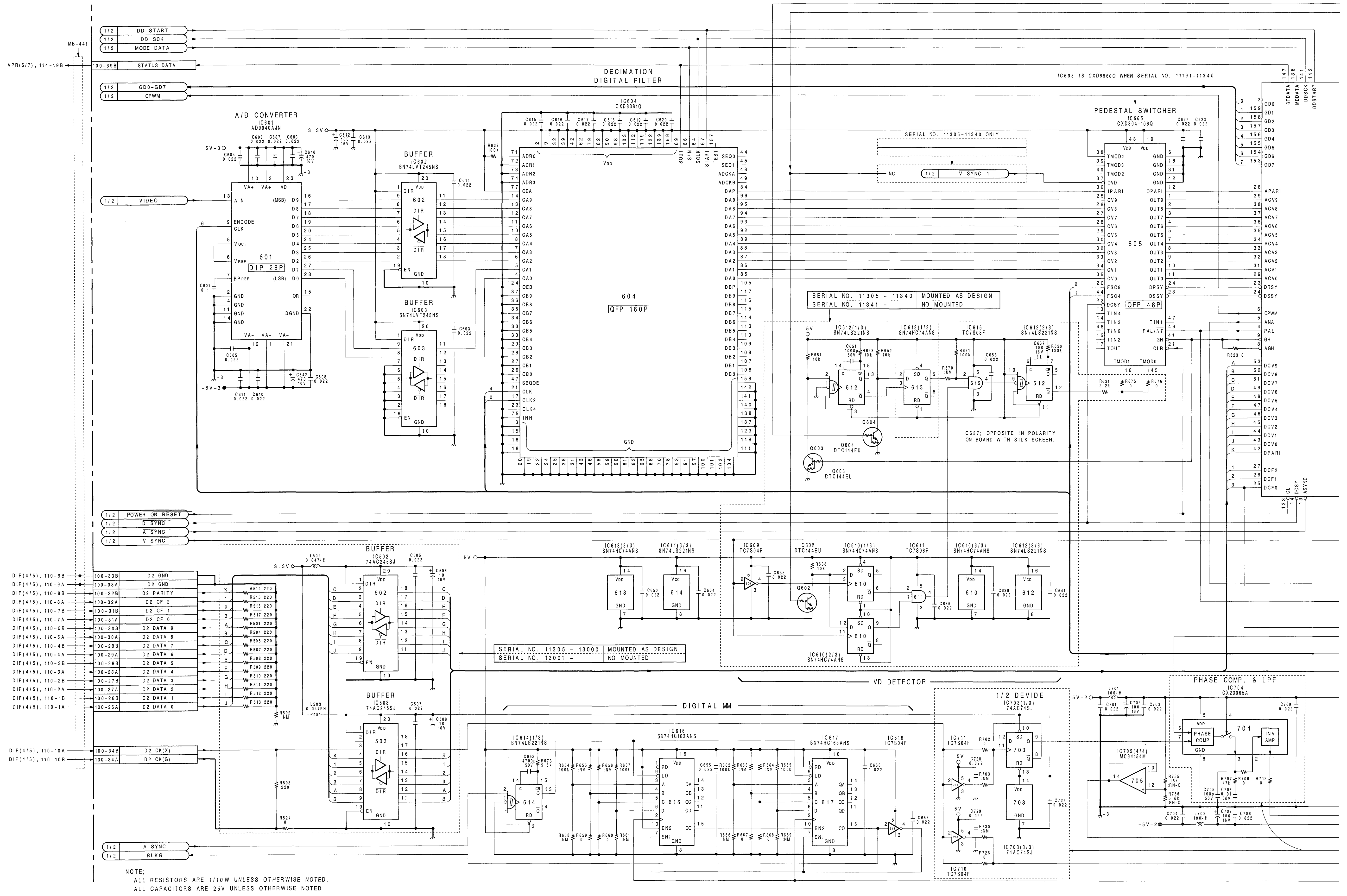

1
2
3
4
5
DD START
DD SCK
MODE DATA
STATUS DATA
GD0-GD7
CPWM
VIDEO
POWER ON RESET
D SYNC
A SYNC
V SYNC
D2 GND
D2 PARITY
D2 CF 2
D2 CF 1
D2 CF 0
D2 DATA 9
D2 DATA 8
D2 DATA 7
D2 DATA 6
D2 DATA 5
D2 DATA 4
D2 DATA 3
D2 DATA 2
D2 DATA 1
D2 DATA 0
D2 CK(X)
D2 CK(G)
BLKG
A/D CONVERTER
IC601
AD9040AJN
DIP 28P
BUFFER
IC602
SN74LVT245NS
IC603
SN74LVT245NS
DECIMATION
DIGITAL FILTER
IC604
CXD8381Q
QFP 160P
PEDESTAL SWITCHER
IC605
CXD304-106Q
QFP 48P
IC605 IS CXD8860Q WHEN SERIAL NO. 11191-11340
SERIAL NO. 11305-11340 ONLY
SERIAL NO. 11305 - 11340 MOUNTED AS DESIGN
SERIAL NO. 11341 - NO MOUNTED
C637; OPPOSITE IN POLARITY
ON BOARD WITH SILK SCREEN.
IC502
74AC245SJ
IC503
74AC245SJ
SERIAL NO. 11305 - 13000 MOUNTED AS DESIGN
SERIAL NO. 13001 - NO MOUNTED
VD DETECTOR
DIGITAL MM
IC614(1/3)
SN74LS221NS
IC616
SN74HC163ANS
IC617
SN74HC163ANS
IC618
TC7S04F
1/2 DEVIDE
IC703(1/3)
74AC74SJ
IC703(3/3)
74AC74SJ
IC711
TC7S04F
IC710
TC7S04F
PHASE COMP. & LPF
IC704
CX23065A
IC705(4/4)
MC34184M
NOTE;
ALL RESISTORS ARE 1/10W UNLESS OTHERWISE NOTED.
ALL CAPACITORS ARE 25V UNLESS OTHERWISE NOTED
A
B
C
D
E
F
G
H

http://getMANUAL.com

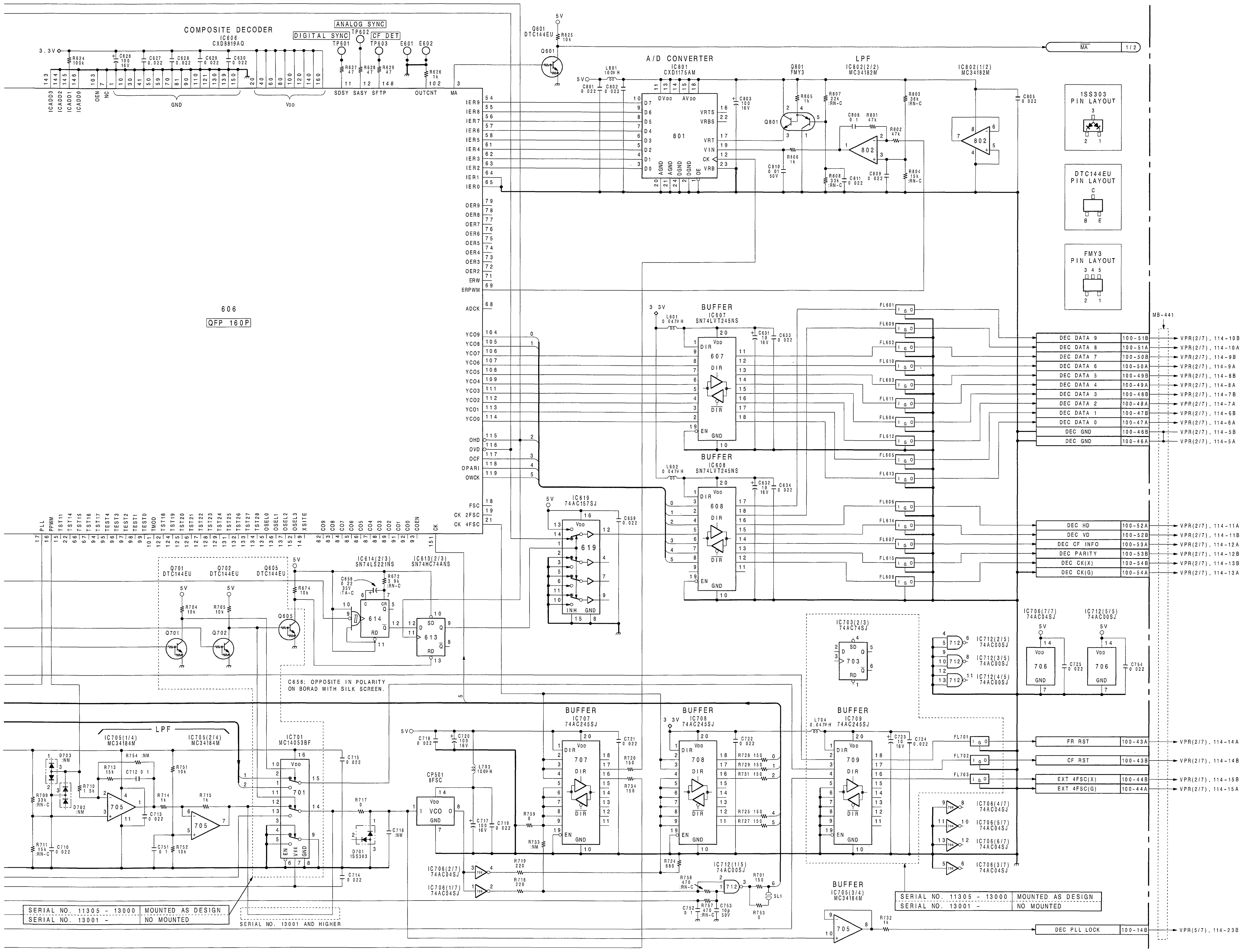

Analog Composite Decode
(A/D, Digital Filter)

DEC-65 BOARD (2/2)

BOARD NO. 1-648-545-13
BKDW-505(UCJ) :DEC-65 MCB :#11305-14130
DVW-DEC65-NTSC-REC-S/M-05-C

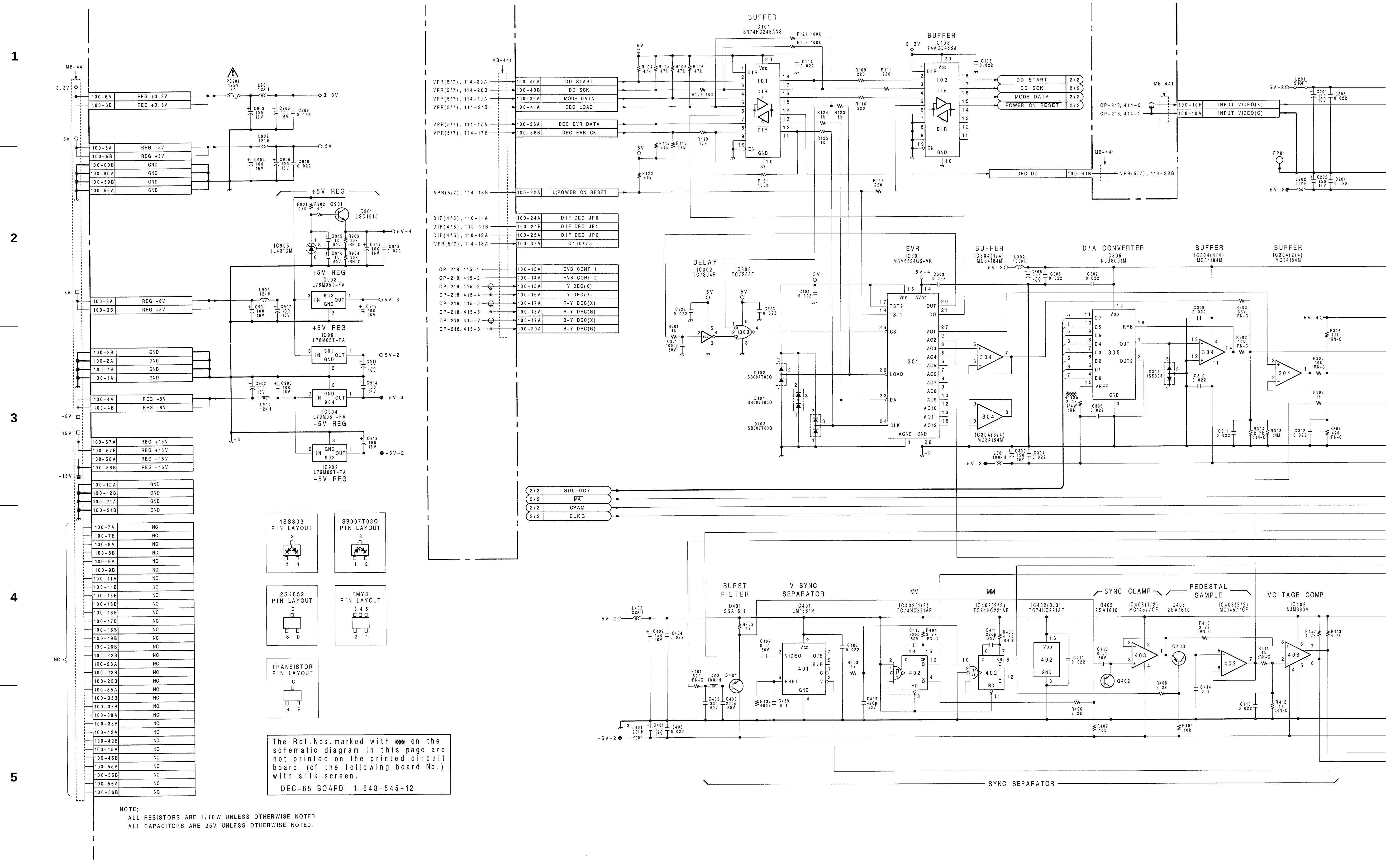
1
2
3
4
5
MB-441
REG +3.3V
REG +5V
GND
REG +8V
REG -8V
REG +15V
REG -15V
NC
+5V REG
IC905
TL431CM
Q901
2SD1615
IC903
L78M05T-FA
IC901
L78M05T-FA
IC904
L79M05T-FA
-5V REG
IC902
L79M05T-FA
1SS303
PIN LAYOUT
SB007T03Q
PIN LAYOUT
2SK852
PIN LAYOUT
FMY3
PIN LAYOUT
TRANSISTOR
PIN LAYOUT
The Ref.Nos.marked with ※※ on the schematic diagram in this page are not printed on the printed circuit board (of the following board No.) with silk screen.
DEC-65 BOARD: 1-648-545-12
NOTE:
ALL RESISTORS ARE 1/10W UNLESS OTHERWISE NOTED.
ALL CAPACITORS ARE 25V UNLESS OTHERWISE NOTED.
DD START
DD SCK
MODE DATA
DEC LOAD
DEC EVR DATA
DEC EVR CK
L;POWER ON RESET
DIF DEC JP0
DIF DEC JP1
DIF DEC JP2
C100/75
EVB CONT 1
EVB CONT 2
Y DEC(X)
Y DEC(G)
R-Y DEC(X)
R-Y DEC(G)
B-Y DEC(X)
B-Y DEC(G)
BUFFER
IC101
SN74HC245ANS
IC103
74AC245SJ
POWER ON RESET
DEC DO
INPUT VIDEO(X)
INPUT VIDEO(G)
DELAY
IC302
TC7S04F
IC303
TC7S08F
EVR
IC301
MSM6524GS-VK
IC304(1/4)
MC34184M
D/A CONVERTER
IC305
NJU8001M
IC304(4/4)
MC34184M
IC304(2/4)
MC34184M
IC304(3/4)
MC34184M
GD0-GD7
MA
CPWM
BLKG
BURST
FILTER
Q401
2SA1611
V SYNC
SEPARATOR
IC401
LM1881M
MM
IC402(1/3)
TC74HC221AF
IC402(2/3)
TC74HC221AF
IC402(3/3)
TC74HC221AF
SYNC CLAMP
Q402
2SA1610
IC403(1/2)
MC14577CF
PEDESTAL
SAMPLE
Q403
2SA1610
IC403(2/2)
MC14577CF
VOLTAGE COMP.
IC405
NJM360M
SYNC SEPARATOR

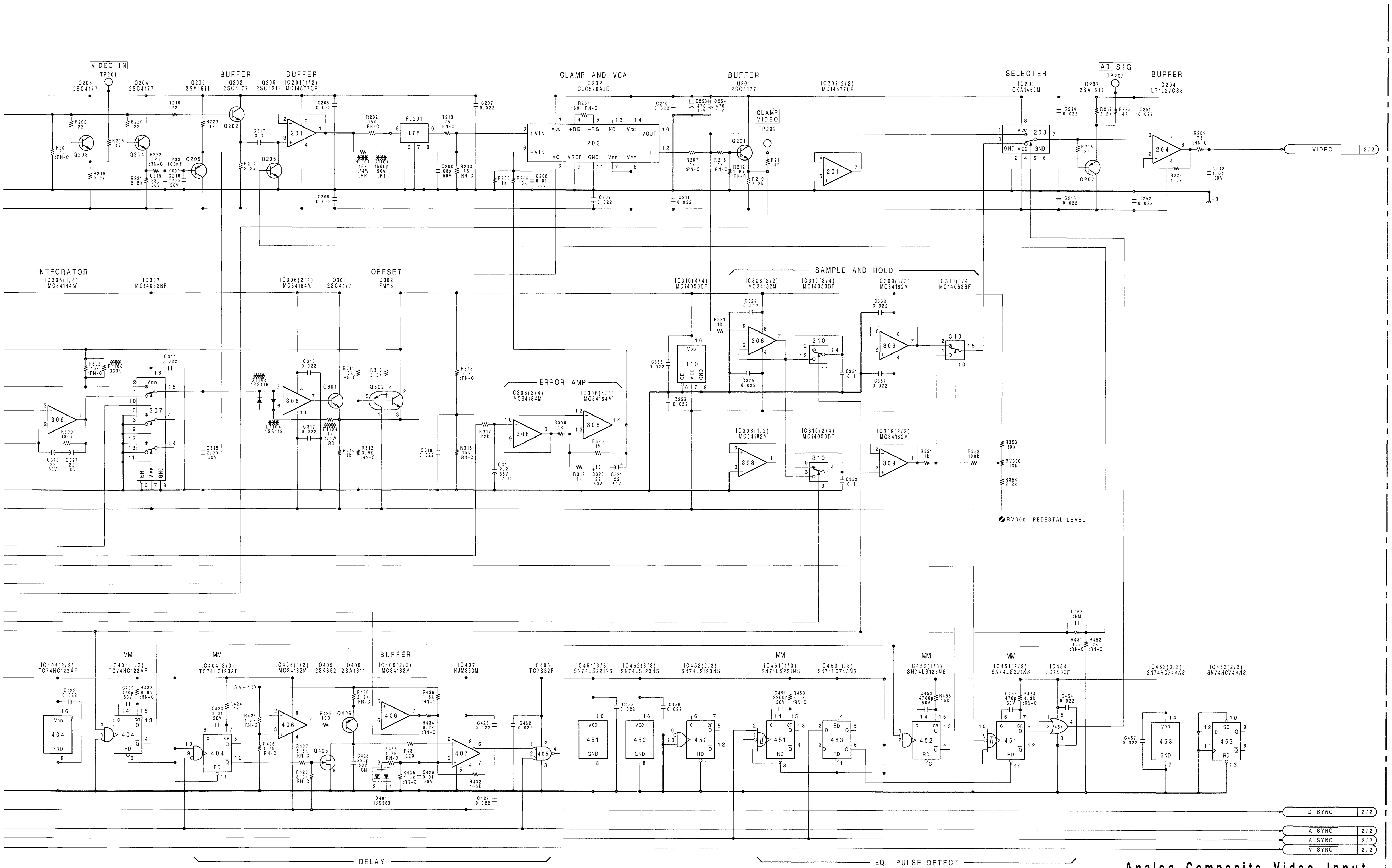

Analog Composite Video Input (EVR, AGC, SYNC Separator)

DEC-65 BOARD (1/2)

BOARD NO. 1-648-545-12
BKDW-505(UCJ) :DEC-65 MCB :#10701-#11304

DVW-DEC65-NTSC-REC-S/M-04-B

1
2
3
4
5

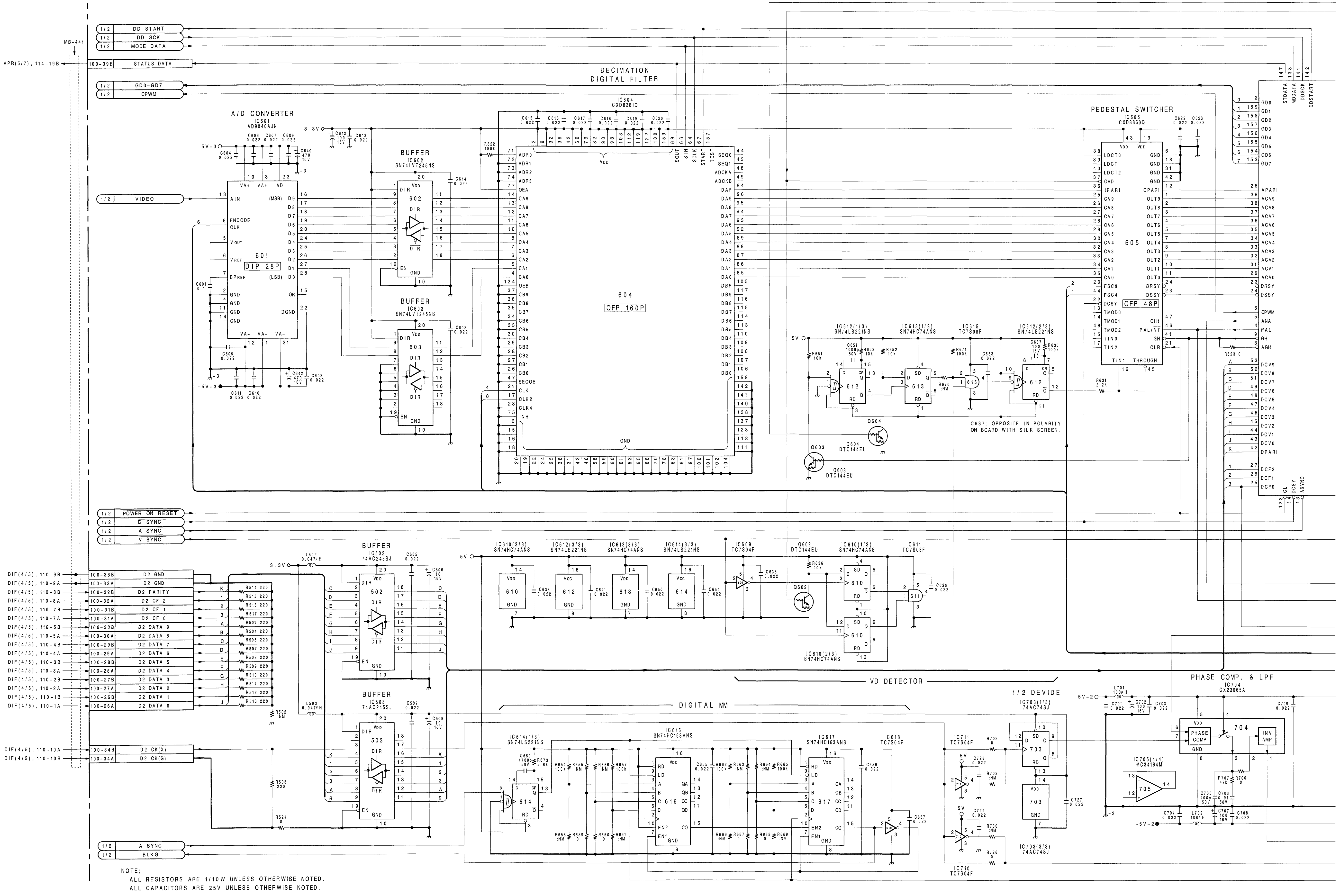
DD START
DD SCK
MODE DATA
STATUS DATA
GD0-GD7
CPWM
VIDEO
DECIMATION
DIGITAL FILTER
A/D CONVERTER
IC601
AD9040AJN
BUFFER
IC602
SN74LVT245NS
BUFFER
IC603
SN74LVT245NS
IC604
CXD8381Q
PEDESTAL SWITCHER
IC605
CXD8660Q
POWER ON RESET
D SYNC
A SYNC
V SYNC
BUFFER
IC502
74AC245SJ
BUFFER
IC503
74AC245SJ
VD DETECTOR
DIGITAL MM
1/2 DEVIDE
PHASE COMP. & LPF
IC704
CX23065A
C637; OPPOSITE IN POLARITY
ON BOARD WITH SILK SCREEN.
NOTE;
ALL RESISTORS ARE 1/10W UNLESS OTHERWISE NOTED.
ALL CAPACITORS ARE 25V UNLESS OTHERWISE NOTED.

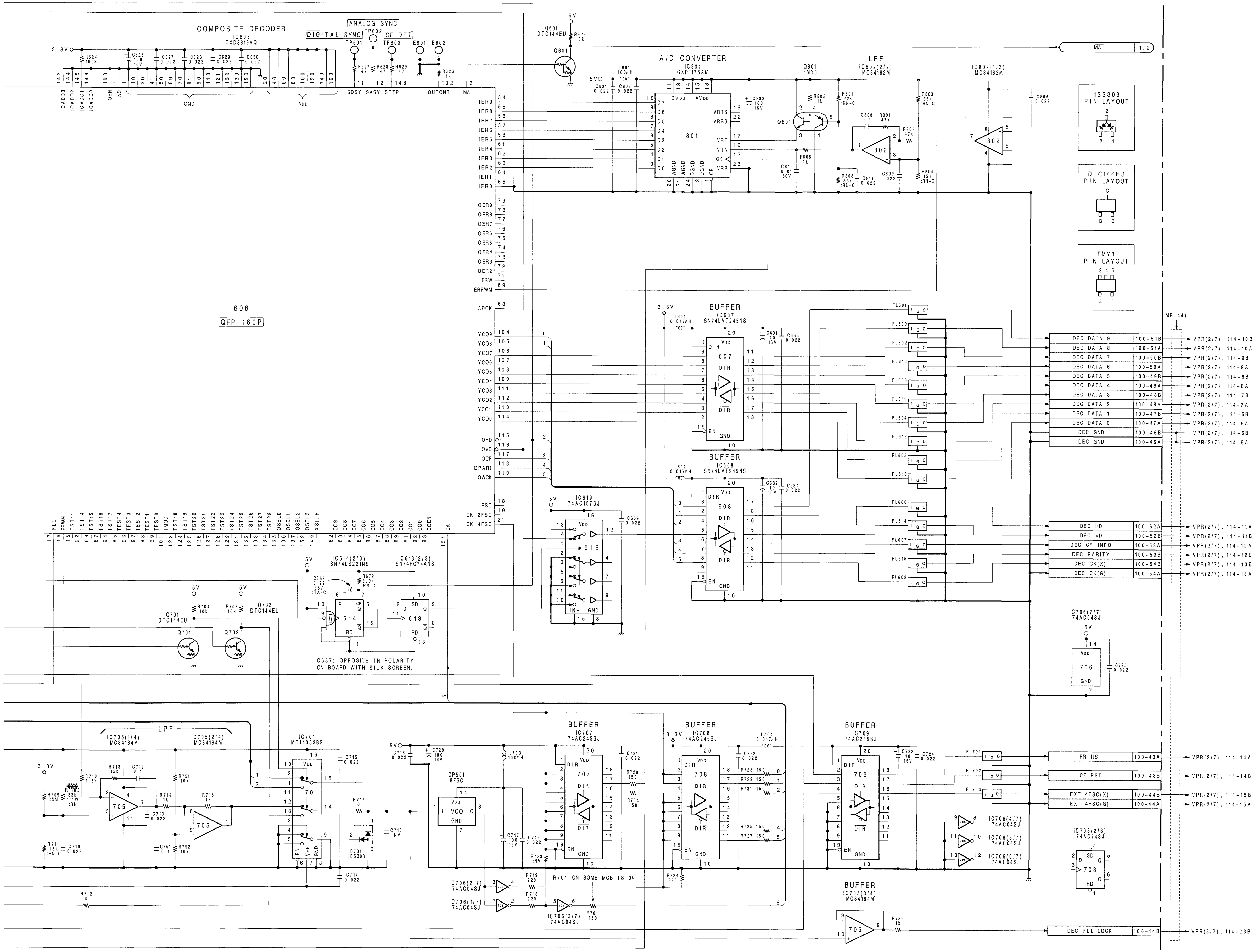

The Ref.Nos.marked with ✱✱✱ on the schematic diagram in this page are not printed on the printed circuit board (of the following board No.) with silk screen.

DEC-65 BOARD: 1-648-545-12

Analog Composite Decode (A/D, Digital Filter)

DEC-65 BOARD (2/2)

BOARD NO. 1-648-545-12
BKDW-505(UCJ) :DEC-65 MCB :#10701-#11304

DVW-DEC65-NTSC-REC-S/M-04-B

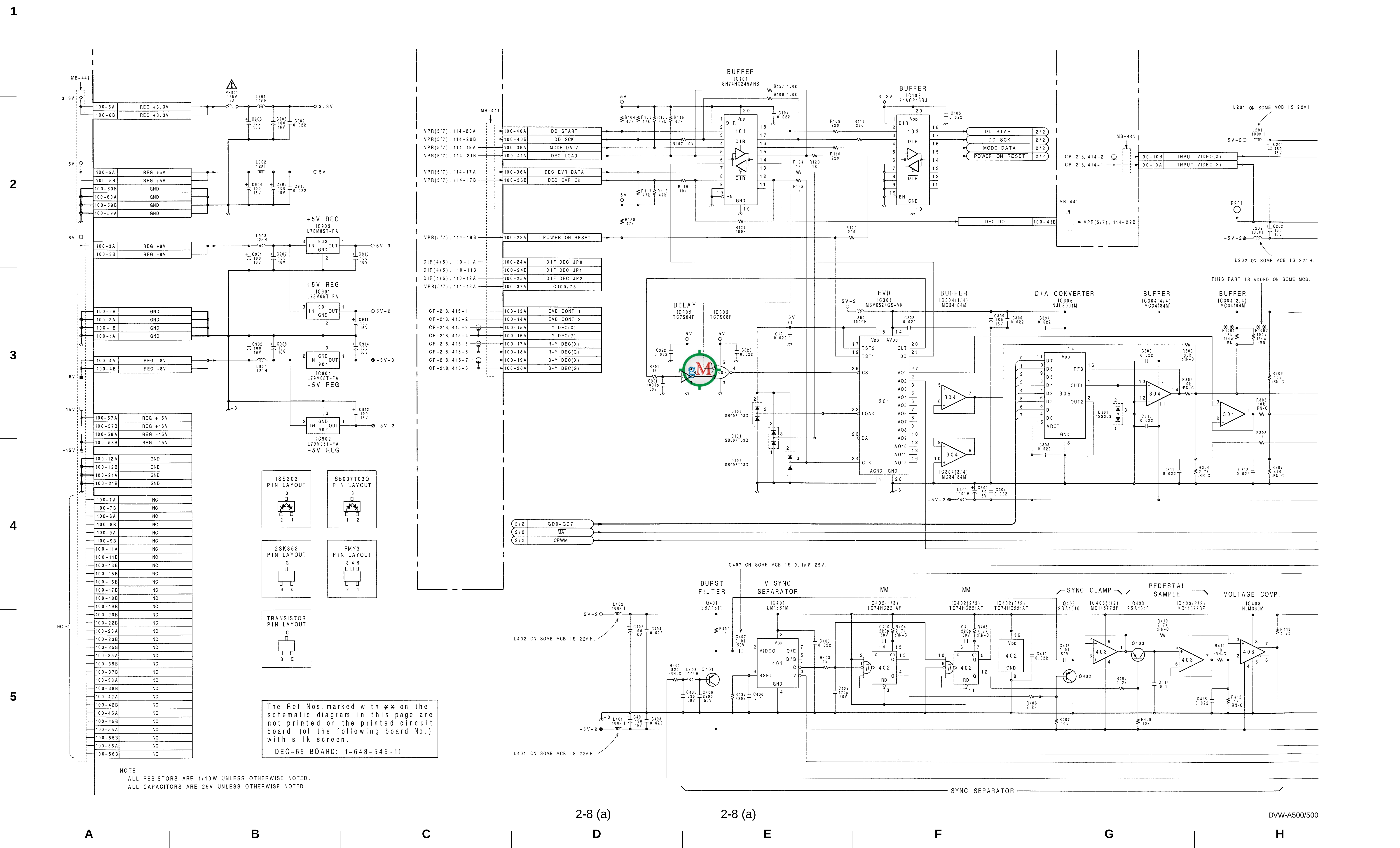
BUFFER
IC101
SN74HC245ANS
BUFFER
IC103
74AC245SJ
DELAY
IC302
TC7S04F
EVR
IC301
MSM6524GS-VK
D/A CONVERTER
IC305
NJU8001M
+5V REG
IC903
L78M05T-FA
+5V REG
IC901
L78M05T-FA
IC904
L79M05T-FA
-5V REG
IC902
L79M05T-FA
-5V REG
BURST FILTER
V SYNC SEPARATOR
IC401
LM1881M
SYNC CLAMP
PEDESTAL SAMPLE
VOLTAGE COMP.
IC408
NJM360M
SYNC SEPARATOR
1SS303 PIN LAYOUT
SB007T03Q PIN LAYOUT
2SK852 PIN LAYOUT
FMY3 PIN LAYOUT
TRANSISTOR PIN LAYOUT
The Ref.Nos.marked with ✱✱ on the schematic diagram in this page are not printed on the printed circuit board (of the following board No.) with silk screen.
DEC-65 BOARD: 1-648-545-11
NOTE;
ALL RESISTORS ARE 1/10W UNLESS OTHERWISE NOTED.
ALL CAPACITORS ARE 25V UNLESS OTHERWISE NOTED.

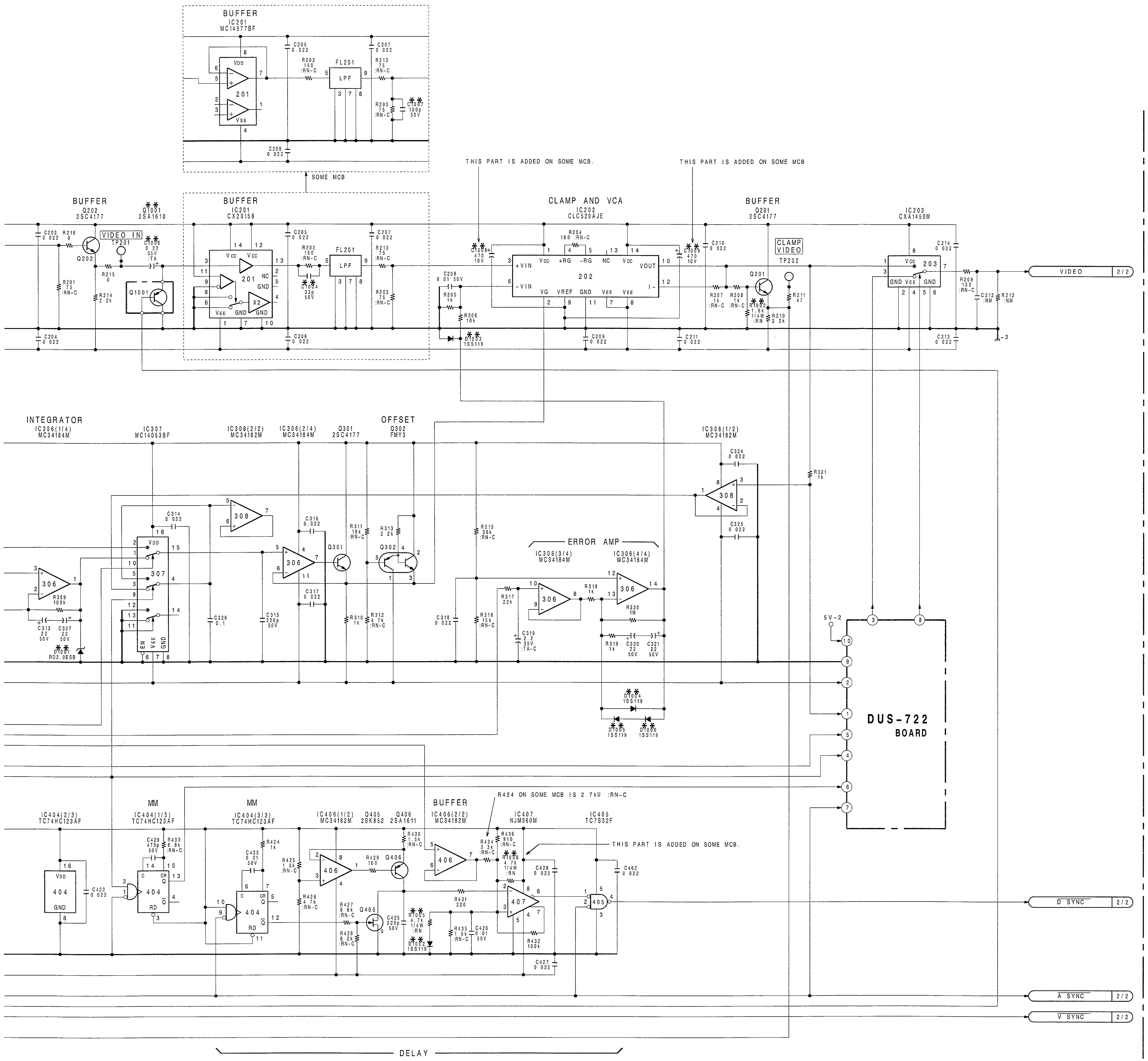

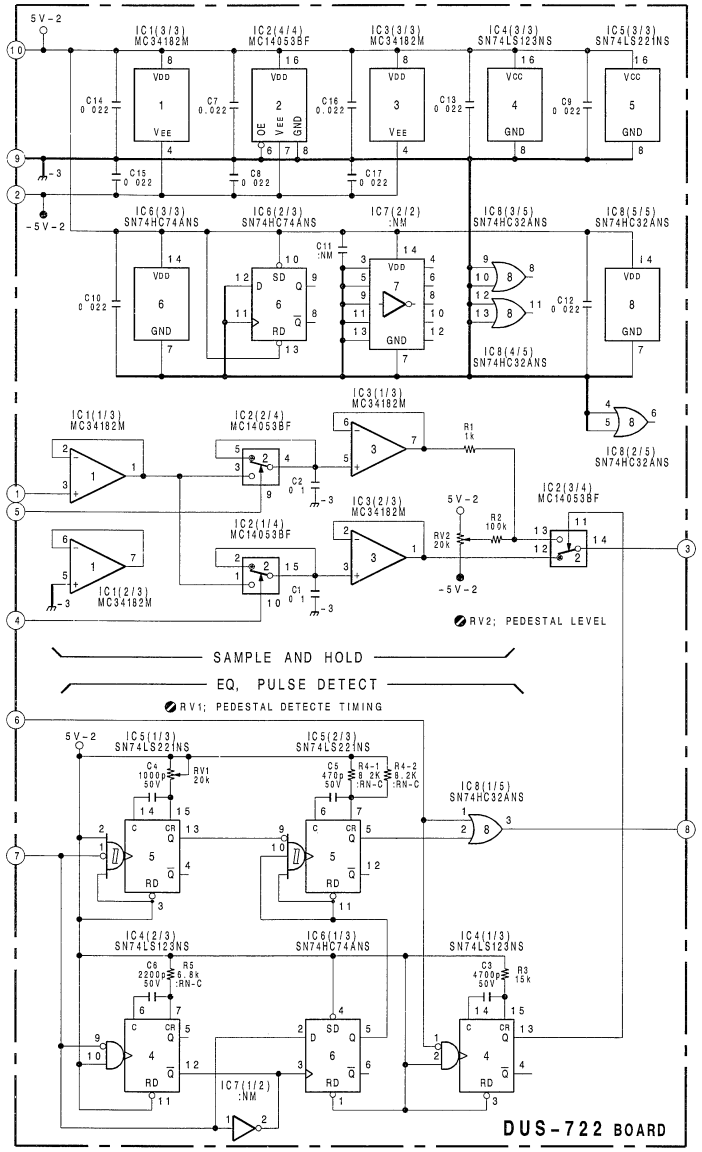

DUS-722 BOARD -A Side-

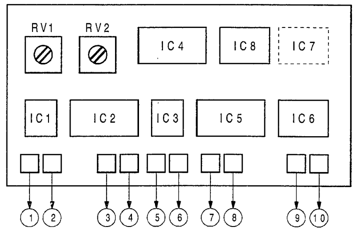

DUS-722 BOARD

BOARD NO. 1-650-561-11

Analog Composite Video Input
(EVR, AGC, SYNC Separator)

DEC-65 BOARD (1/2)

BOARD NO. 1-648-545-11
BKDW-505(UCJ) :DEC-65 MCB :#10001-#10700

DWV-DEC65-NTSC-REC-S/M-04-A

1 2 3 4 5

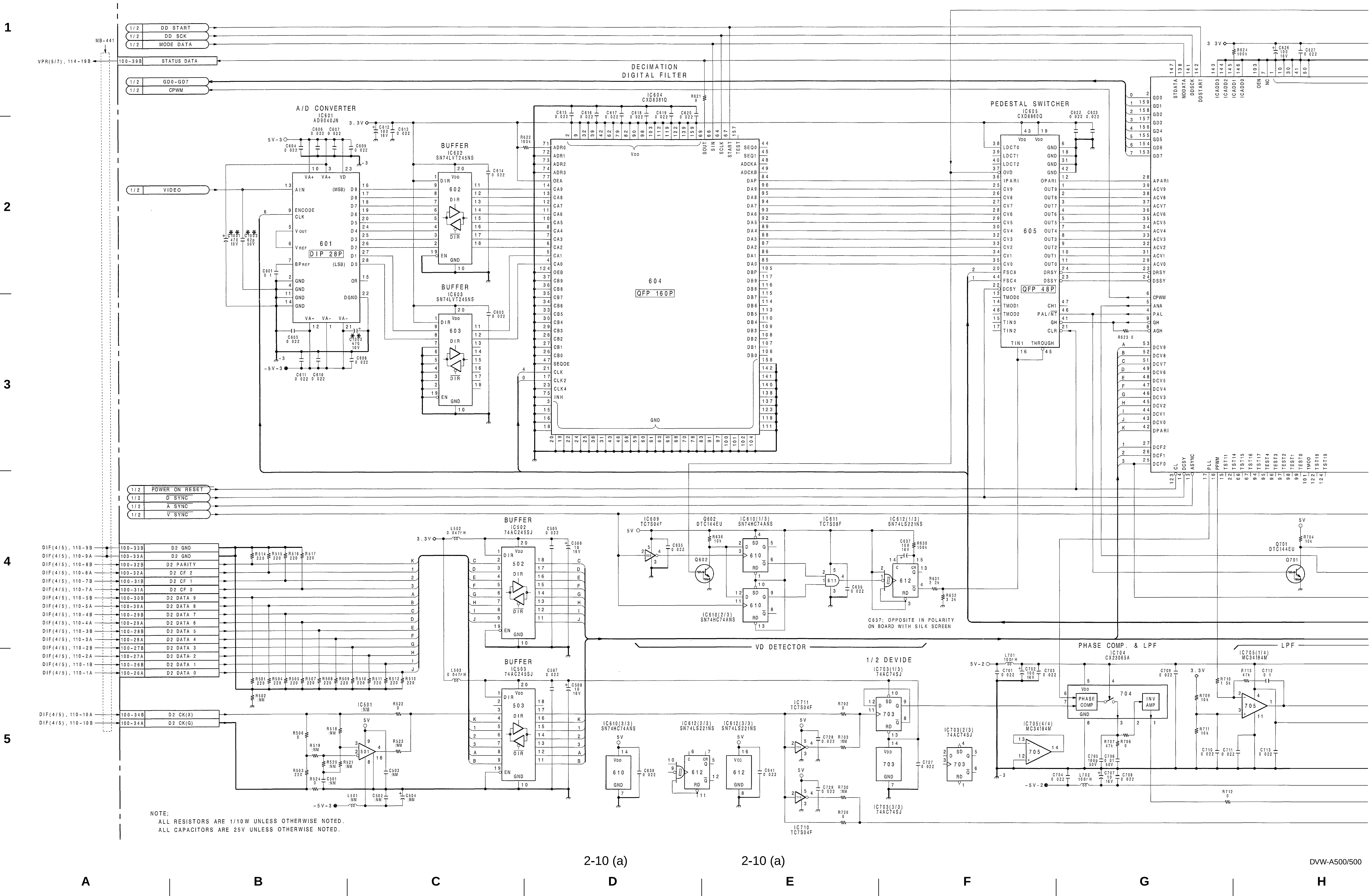
DD START
DD SCK
MODE DATA
STATUS DATA
GD0-GD7
CPWM
VIDEO
POWER ON RESET
D SYNC
A SYNC
V SYNC
MB-441
VPR(5/7), 114-19B
A/D CONVERTER
IC601
AD9040JN
BUFFER
IC602
SN74LVT245NS
IC603
SN74LVT245NS
DECIMATION
DIGITAL FILTER
IC604
CXD8381Q
QFP 160P
PEDESTAL SWITCHER
IC605
CXD8860Q
QFP 48P
DIP 28P
D2 GND
D2 PARITY
D2 CF 2
D2 CF 1
D2 CF 0
D2 DATA 9
D2 DATA 8
D2 DATA 7
D2 DATA 6
D2 DATA 5
D2 DATA 4
D2 DATA 3
D2 DATA 2
D2 DATA 1
D2 DATA 0
D2 CK(X)
D2 CK(G)
BUFFER
IC502
74AC245SJ
IC503
74AC245SJ
IC501
IC609
TC7S04F
Q602
DTC144EU
IC610(1/3)
SN74HC74ANS
IC610(2/3)
SN74HC74ANS
IC611
TC7S08F
IC612(1/3)
SN74LS221NS
C637: OPPOSITE IN POLARITY
ON BOARD WITH SILK SCREEN
VD DETECTOR
Q701
DTC144EU
1/2 DEVIDE
IC703(1/3)
74AC74SJ
IC711
TC7S04F
IC710
TC7S04F
IC610(3/3)
SN74HC74ANS
IC612(2/3)
SN74LS221NS
IC612(3/3)
SN74LS221NS
IC703(2/3)
74AC74SJ
IC703(3/3)
74AC74SJ
PHASE COMP. & LPF
IC704
CX23065A
PHASE COMP
INV AMP
IC705(4/4)
MC34184M
LPF
IC705(1/4)
MC34184M
NOTE;
ALL RESISTORS ARE 1/10W UNLESS OTHERWISE NOTED.
ALL CAPACITORS ARE 25V UNLESS OTHERWISE NOTED.
1
2
3
4
5
A
B
C
D
E
F
G
H

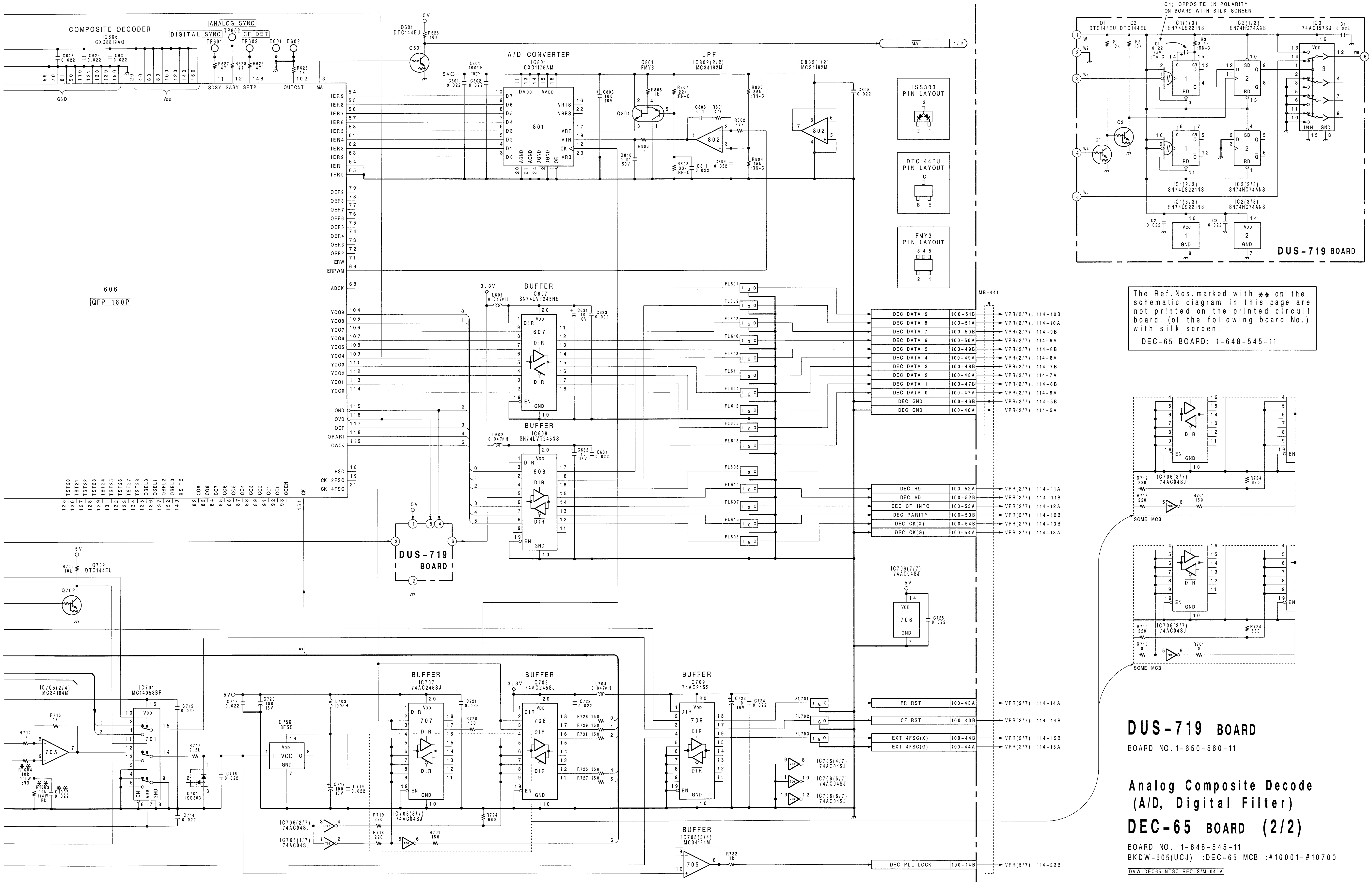

The Ref.Nos.marked with ✱✱ on the schematic diagram in this page are not printed on the printed circuit board (of the following board No.) with silk screen.

DEC-65 BOARD: 1-648-545-11

DUS-719 BOARD

BOARD NO.1-650-560-11

Analog Composite Decode (A/D, Digital Filter)

DEC-65 BOARD (2/2)

BOARD NO. 1-648-545-11
BKDW-505(UCJ) :DEC-65 MCB :#10001-#10700

DVW-DEC65-NTSC-REC-S/M-04-A

1

2

3

4

5

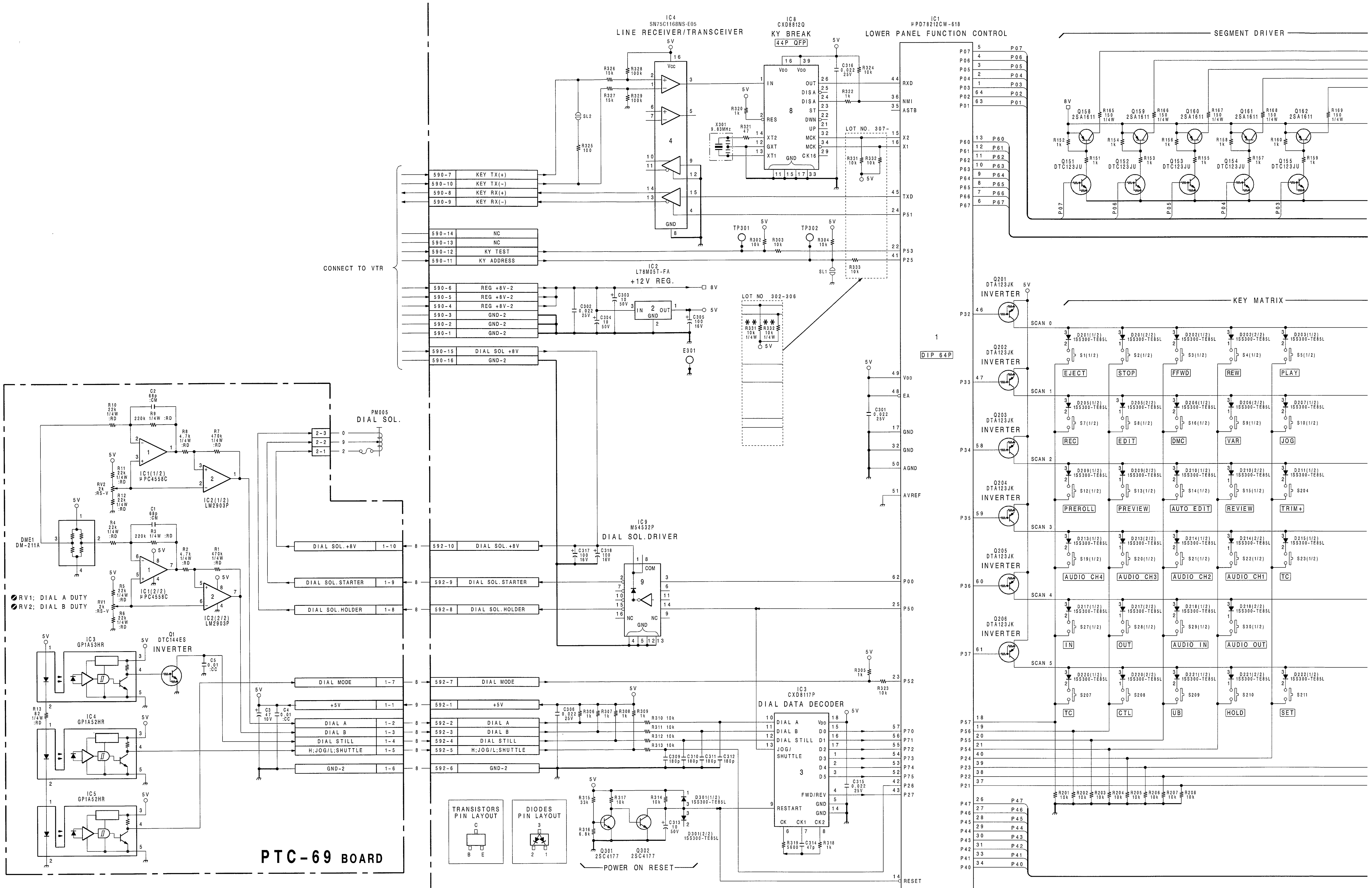

NOTE;
ALL RESISTORS ARE 1/10W UNLESS OTHERWISE NOTED.
ALL CAPACITORS ARE 50V UNLESS OTHERWISE NOTED.

A | B | C | D | E | F | G | H

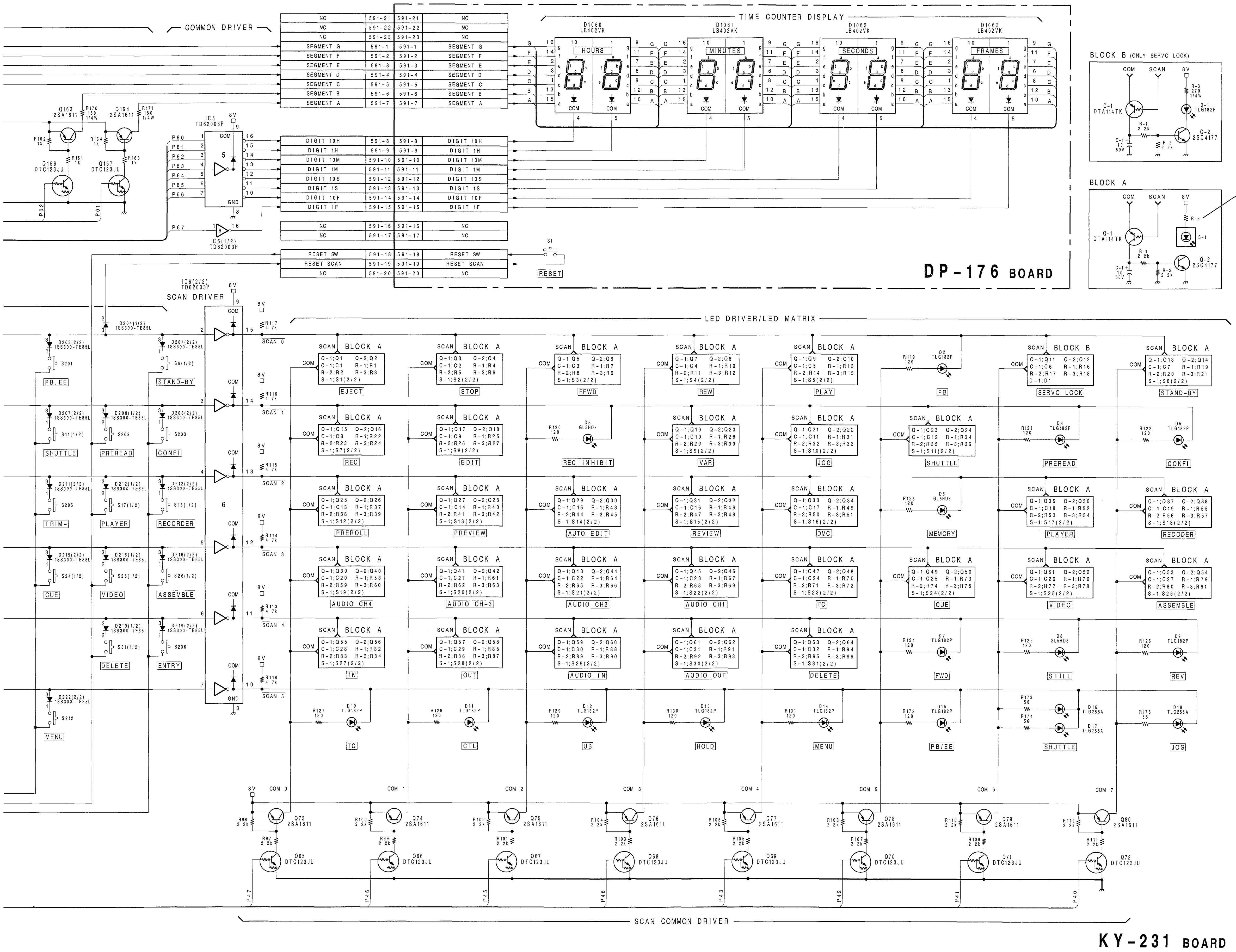

The Ref.Nos.marked with ** on the schematic diagram in this page are not printed on the printed circuit board (of the following board No.) with silk screen.

KY-231 BOARD : 1-648-546-11

LOT NO.	BOARD NO.	
	KY-231	DP-176
302-306	1-648-546-11	1-648-547-11
307-402	1-648-546-12	1-648-547-12
403-	1-648-546-13	1-648-547-12

REF NO.	LOT NO.	
	302-402	403-
R3, 6	120	270 1/4W
R9, 12, R15, 21	120	330 1/4W
R24	220 1/4W	270 1/4W
R27	120	330 1/4W
R30, 33, R36	180 1/4W	390 1/4W
R39, 42	120	330 1/4W
R45	220 1/4W	270 1/4W
R48	120	330 1/4W
R51, 54, R57, 60, R63, 66, R69, 72, R75, 78, R81, 84, R87, 90, R93, 96	180 1/4W	390 1/4W

Time Counter Display
DP-176 BOARD

BOARD NO. 1-648-547-12
BOARD' S LOT NO. 501-
BKDW-514 :DP-176 MCB

Jog/Shuttle Dial Sensor
PTC-69 BOARD

BOARD NO. 1-648-568-12
BKDW-514 :PTC-69 MCB

Lower Panel Control
KY-231 BOARD

BOARD NO. 1-648-546-13
BOARD' S LOT NO. 501-
BKDW-514 :KY-231 MCB

BKDW-514 :#10001-

BKDW514-S/M-03

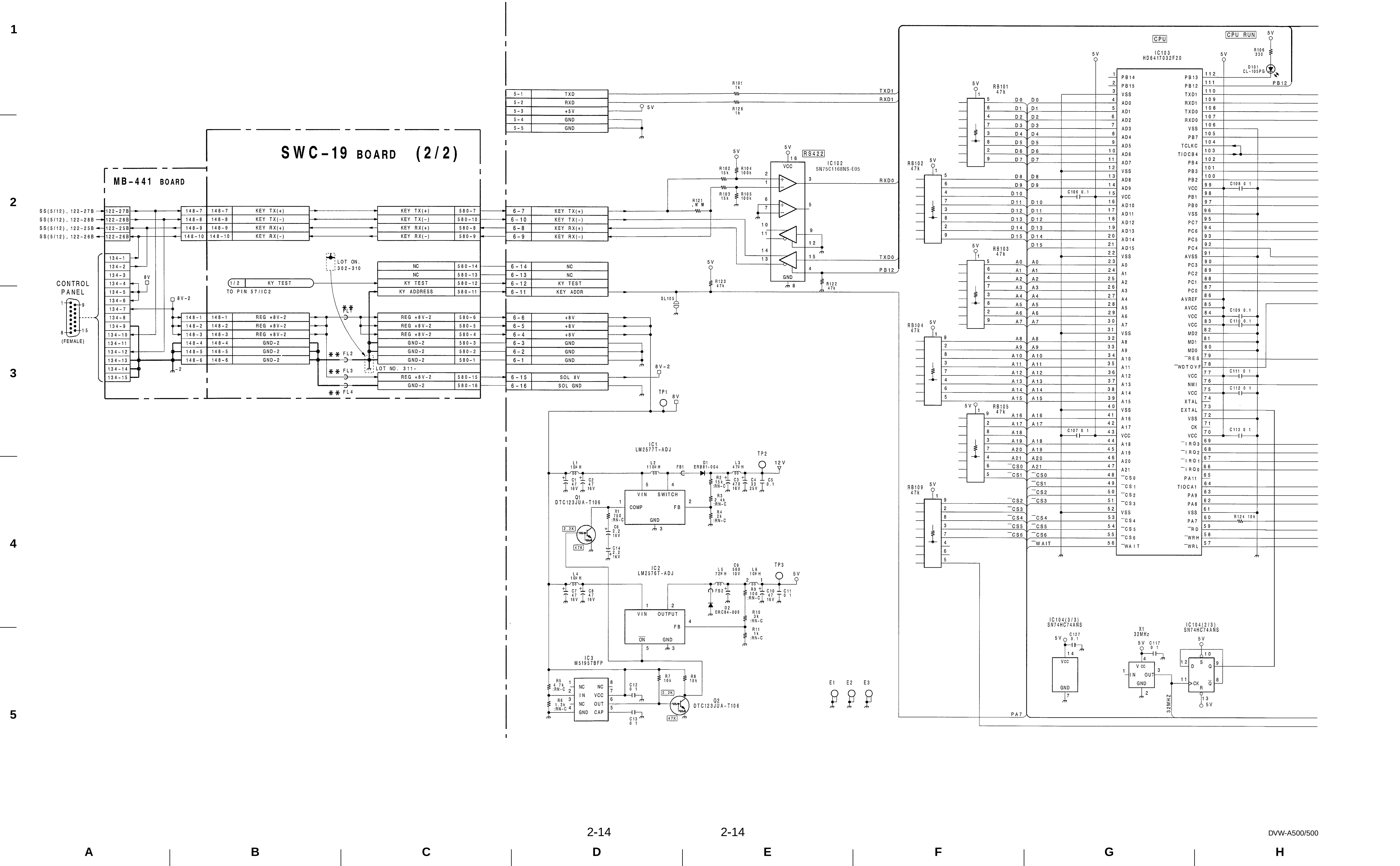
SWC-19 BOARD (2/2)
MB-441 BOARD
CONTROL PANEL
(FEMALE)
KEY TX(+)
KEY TX(-)
KEY RX(+)
KEY RX(-)
KY TEST
KY ADDRESS
KEY ADDR
REG +8V-2
GND-2
SOL 8V
SOL GND
TO PIN 57/IC2
LOT ON. 302-310
LOT NO. 311-
TXD
RXD
+5V
GND
RS422
IC102 SN75C1168NS-E05
IC103 HD6417032F20
CPU
CPU RUN
D101 CL-105PG
IC1 LM2577T-ADJ
IC2 LM2576T-ADJ
IC3 M51957BFP
Q1 DTC123JUA-T106
Q2 DTC123JUA-T106
IC104(3/3) SN74HC74ANS
IC104(2/3) SN74HC74ANS
X1 32MHz
32MHZ

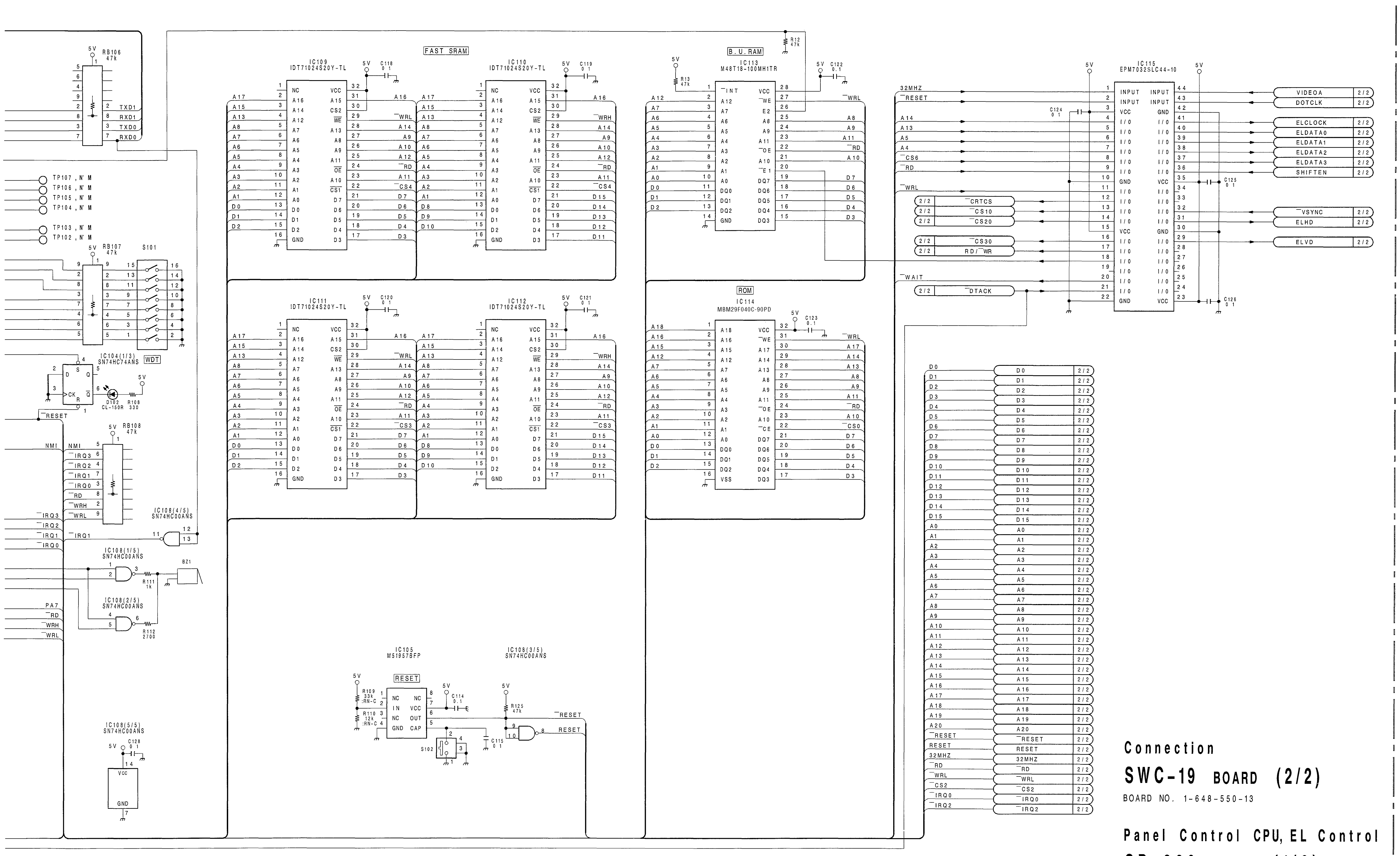

Connection

SWC-19 BOARD (2/2)

BOARD NO. 1-648-550-13

Panel Control CPU, EL Control

CP-266 BOARD (1/2)

BOARD NO.1-658-037-11, 12
BKDW-515:CP-266 MCB:#10001-

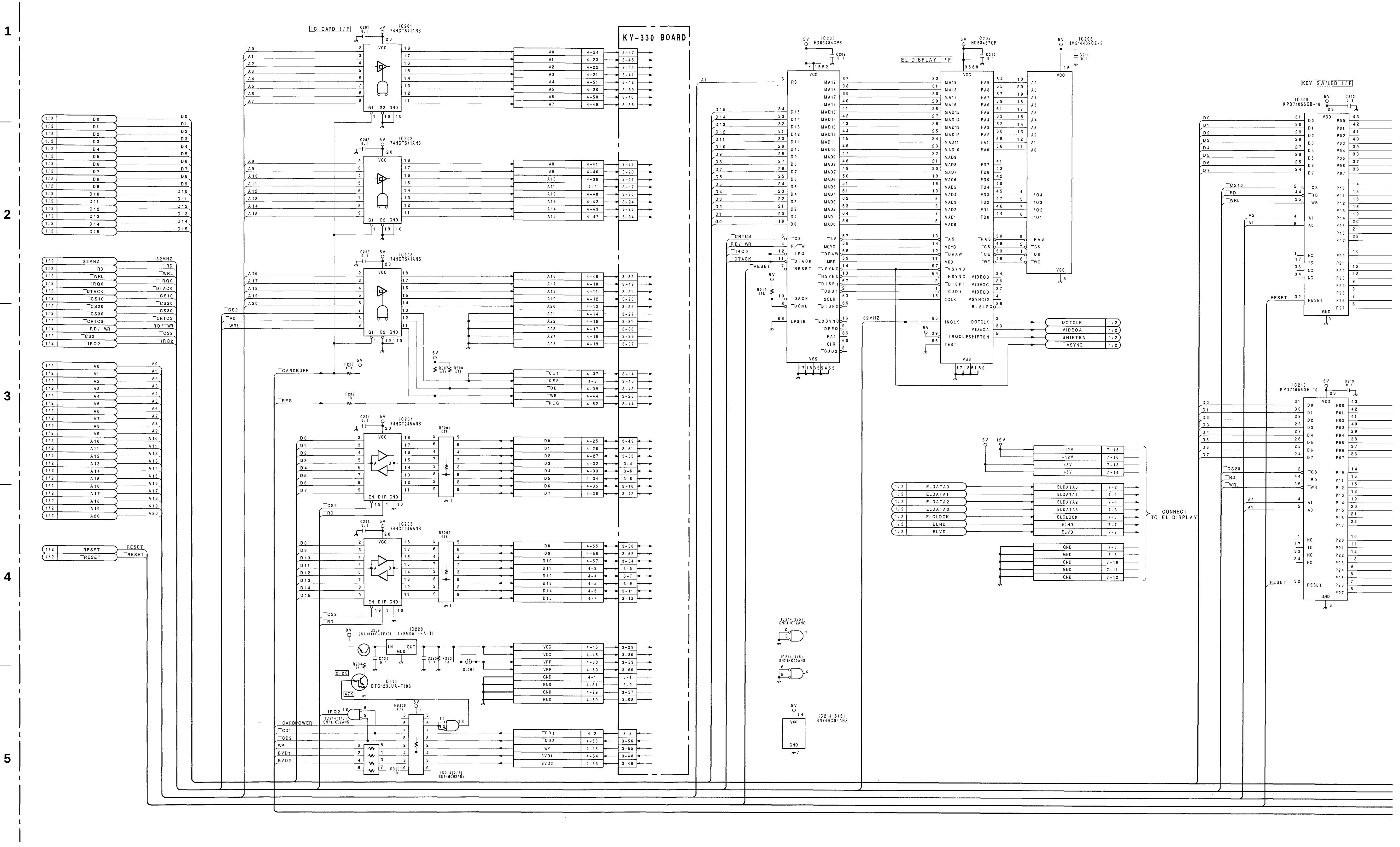
IC CARD I/F
KY-330 BOARD
EL DISPLAY I/F
KEY SW/LED I/F
CONNECT TO EL DISPLAY
IC201 74HCT541ANS
IC202 74HCT541ANS
IC203 74HCT541ANS
IC204 74HCT245ANS
IC205 74HCT245ANS
IC206 HD63484CP8
IC207 HD63487CP
IC208 HM514402CZ-8
IC209 μPD71055GB-10
IC210 μPD71055GB-10
IC214 SN74HC02ANS
IC220 L78M05T-FA-TL
Q209 2SA1314C-TE12L
Q210 DTC123JUA-T106

A B C D E F G H

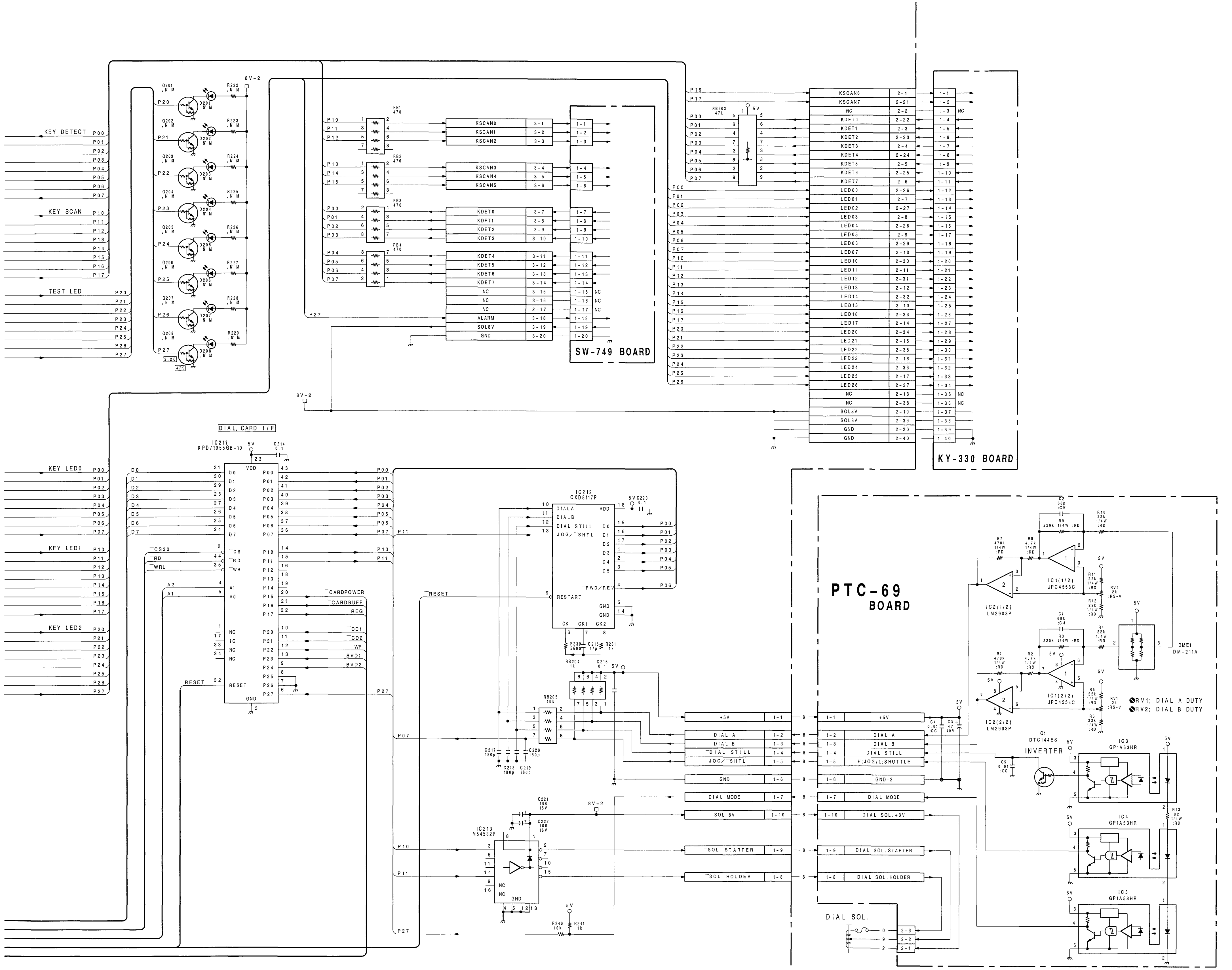

JOG/Shuttle Dial Sensor

PTC-69 BOARD

BOARD NO.1-648-568-12
BKDW-515:PTC-69 MCB

PIO, Memory Card I/F

CP-266 BOARD (2/2)

BOARD NO.1-658-037-11, 12
BKDW-515:CP-266 MCB:#10001-

NOTE;
ALL RESISTORS ARE 1/10W UNLESS OTHERWISE NOTED.
ALL CAPACITORS ARE 50V UNLESS OTHERWISE NOTED

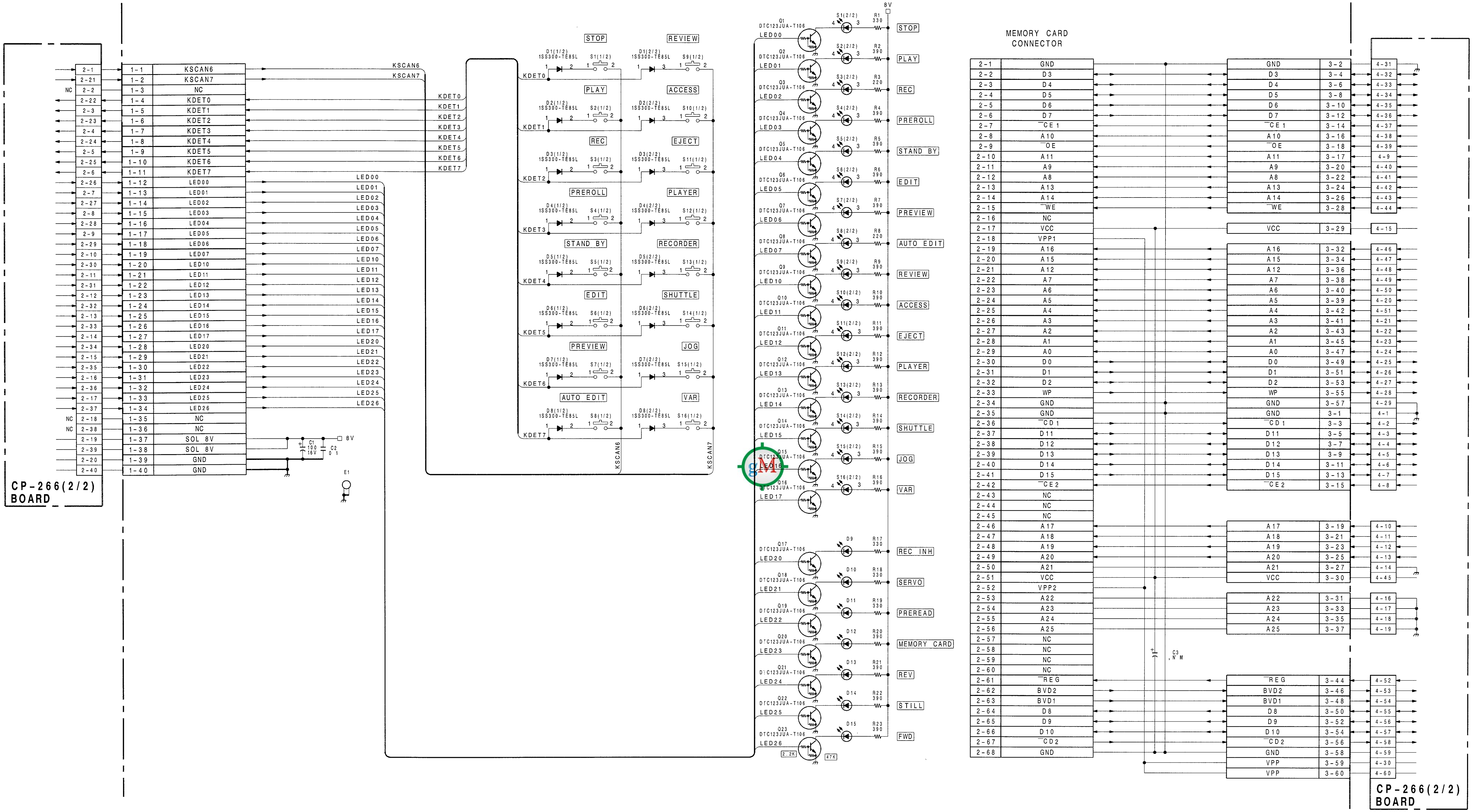

Editing Operation/Tape Transport Control, Memory Card Connector

KY-330 BOARD

BOARD NO.1-658-036-11
BKDW-515:KY-330 MCB:#10001-

B-1 BKDW515-KY330-11

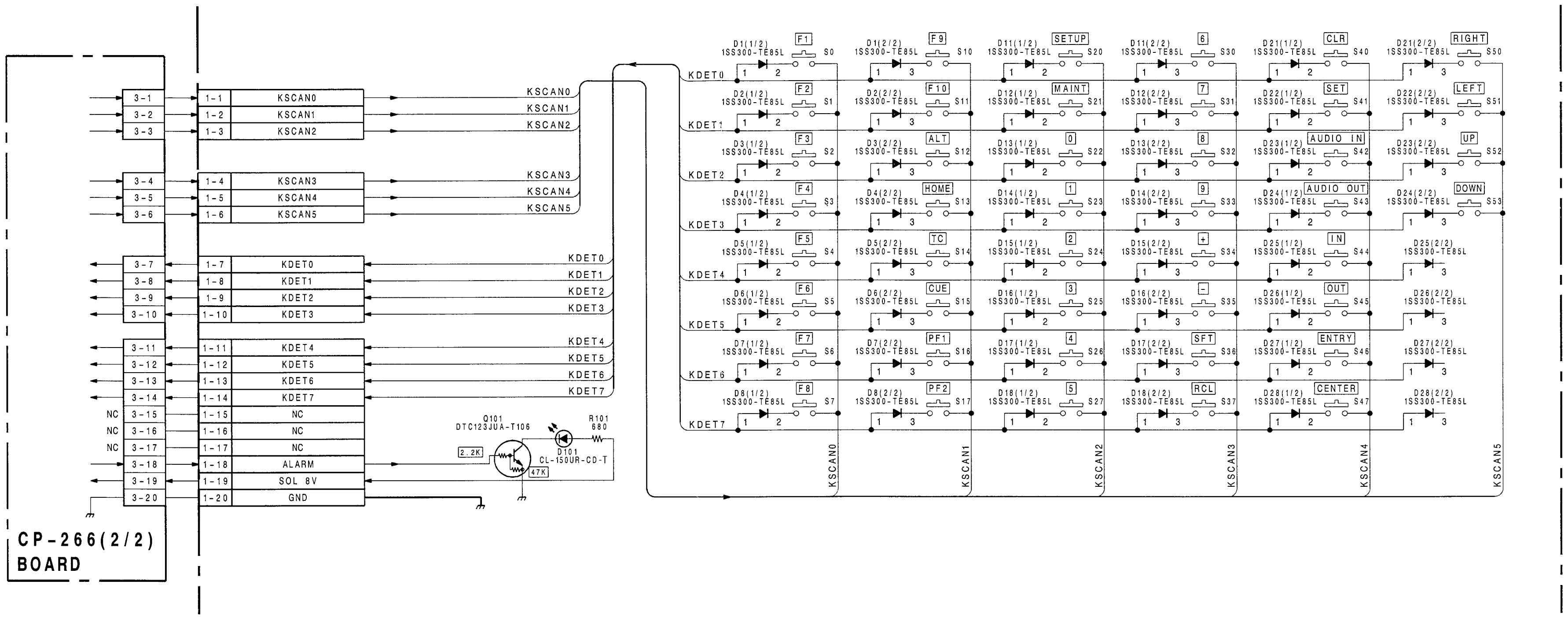

Function Control

SW-749 BOARD

BOARD NO. 1-658-035-11

BKDW-515:SW-749 MCM:#10001-

このマニュアルに記載されている事柄の著作権は当社にあります。
従って，当社の許可なしに無断で複写したり，説明内容（操作，保守等）と異なる目的で本マニュアルを使用することを禁止します。

The material contained in this manual consists of information that is the property of Sony Corporation.
Sony Corporation expressly prohibits the duplication of any portion of this manual or the use thereof for any purpose other than the operation or maintenance of the equipment described in this manual without the express written permission of Sony Corporation.

Le matériel contenu dans ce manuel consiste en informations qui sont la propriété de Sony Corporation.
Sony Corporation interdit formellement la copie de quelque partie que ce soit de ce manuel ou son emploi pour tout autre but que des opérations ou entretiens de l'équipement à moins d'une permission écrite de Sony Corporation.

Das in dieser Anleitung enthaltene Material besteht aus Informationen, die Eigentum der Sony Corporation sind.
Die Sony Corporation untersagt ausdrücklich die Vervielfältigung jeglicher Teile dieser Anleitung oder den Gebrauch derselben für irgendeinen anderen Zweck als die Bedienung oder Wartung der in dieser Anleitung beschriebenen Ausrüstung ohne ausdrückliche schriftliche Erlaubnis der Sony Corporation.

SAFETY CHECK-OUT

After correcting the original service problem, perform the following safety checks before releasing the set to the customer :

Check the metal trim, "metallized" knobs, screws, and all other exposed metal parts for AC leakage. Check leakage as described below.

LEAKAGE TEST

The AC leakage from any exposed metal part to earth ground and from all exposed metal parts to any exposed metal part having a return to chassis, must not exceed 3.5 mA. Leakage current can be measured by any one of three methods.

1. A commercial leakage tester, such as the Simpson 229 or RCA WT-540A. Follow the manufacturers' instructions to use these instruments.
2. A battery-operated AC milliammeter. The Data Precision 245 digital multimeter is suitable for this job.
3. Measuring the voltage drop across a resistor by means of a VOM or battery-operated AC voltmeter. The "limit" indication is 5.25 V, so analog meters must have an accurate low-voltage scale. The Simpson 250 and Sanwa SH-63Trd are examples of a passive VOM that is suitable. Nearly all battery operated digital multimeters that have a 20 V AC range are suitable. (See Fig. A)

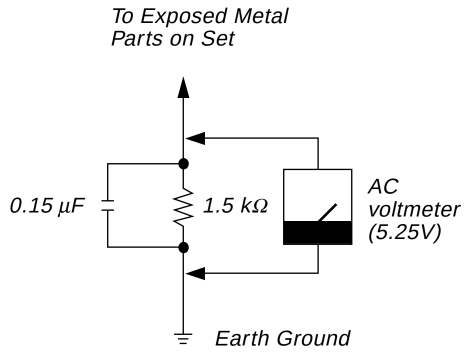

Fig A. Using an AC voltmeter to check AC leakage.

DVW-A500 (J, UC)
DVW-500 (J, UC)
DVW-A500/1 (J, UC)
DVW-500/1 (J, UC) J, E
9-967-530-07

Sony Corporation
Communication System Solutions Network Company

Printed in Japan
2000. 2 08
©1993